DIVISION OF WASTE MANAGEMENT AND RADIATION CONTROL SOLID WASTE LANDFILL PERMIT

Washington County Landfill Facility
CLASS I LANDFILL

Pursuant to the provision of the Utah Solid and Hazardous Waste Act, Title 19, Chapter 6, Part 1, Utah Code Annotated (Utah Code Ann.) (the Act) and the Utah Solid Waste Permitting and Management Rules, R315-301 through 320 of the Utah Administrative Code adopted thereunder, a Permit is issued to:

Washington County Solid Waste Special District #1 as owner
and
Washington County Landfill, Inc. as operator
(Permittees),

to own and operate the Class I *Washington County Landfill Facility* located in Sections 8, 9, and 17, Township 42 South, Range 14 West, Salt Lake Base and Meridian, Washington County, Utah (Lat. 37^0 08' 15" N, Long. 113^0 27' 10" W) as shown in the Permit Renewal Application that was determined complete on *date of completeness notification*.

The Permittees are subject to the requirements of R315-301 through 320 of the Utah Administrative Code that are in effect on the date that this permit becomes effective and the requirements set forth herein.

.

This Permit shall become effective _____.

This Permit shall expire at midnight _____.

Closure Cost Revision Date: _____.

Signed this _____ day of _____, 2018.

_____
Scott T. Anderson, Director
Division of Waste Management and Radiation Control

FACILITY OWNER/OPERATOR INFORMATION

LANDFILL NAME:	Washington County Landfill Facility
OWNER NAME:	Washington County Solid Waste Special District #1
OWNER ADDRESS:	325 North Landfill Road, Washington, Utah
OWNER PHONE NO.:	(435) 673-2813
OPERATOR NAME:	Washington County Landfill, Inc.
OPERATOR ADDRESS:	330 North Landfill Road, Washington, Utah
OPERATOR PHONE NO.:	(435) 619-0141
TYPE OF PERMIT:	Class I
PERMIT NUMBER:	9410R3

The term, "Permit," as used in this document is defined in R315-301-2(55) of the Utah Administrative Code. Director as used throughout this permit refers to the Director of the Division of Solid and Hazardous Waste.

The renewal application dated October 28, 2016, is deemed complete on the date shown on the signature page of this Permit. Attachments to this permit are hereby incorporated into this Solid Waste Permit. All representations made in the attachments are part of this Permit and are enforceable under R315-301-5(2) of the Utah Administrative Code. Where differences in wording exist between this Permit and the attachments, the wording of this Permit supersedes the attachments.

This Permit consists of the signature page, Facility Owner/Operator Information section, sections I through V and Attachments 1-6.

Compliance with this Permit does not constitute a defense to actions brought under any other local, state, or federal laws. This Permit does not exempt the Permittees from obtaining any other local, state or federal permits or approvals required for the facility operation.

The issuance of this Permit does not convey any property rights, other than the rights inherent in this Permit, in either real or personal property, or any exclusive privileges other than those inherent in this Permit. Nor does this Permit authorize any injury to private property or any invasion of personal rights, nor any infringement of federal, state or local laws or regulations, including zoning ordinances.

The provisions of this Permit are severable. If any provision of this Permit is held invalid for any reason, the remaining provisions shall remain in full force and effect. If the application of any provision of this Permit to any circumstance is held invalid, its application to other circumstances shall not be affected.

By this Permit, the Permittees are subject to the following conditions.

PERMIT REQUIREMENTS

I. GENERAL COMPLIANCE RESPONSIBILITIES

I.A. General Operation

I.A.1. The Permittees shall operate the landfill in accordance with all applicable requirements of R315-301 through 320 of the Utah Administrative Code, for a Class I landfill, that are in effect as of the date of this Permit unless otherwise noted in this Permit. Any permit noncompliance or noncompliance with any applicable portions of Utah Code Ann. § 19-6-101 through 125 and applicable portions of R315-301 through 320 of the Utah Administrative Code constitutes a violation of the Permit or applicable statute or rule and is grounds for appropriate enforcement action, permit revocation, modification, or denial of a permit renewal application.

I.B. Acceptable Waste

I.B.1. This Permit is for the disposal of non-hazardous solid waste that may include:

I.B.1.a Municipal solid waste as defined by R315-301-2(47) of the Utah Administrative Code;

I.B.1.b Commercial waste as defined by R315-302-2(14) of the Utah Administrative Code;

I.B.1.c Industrial waste as defined by R315-302-2(35) of the Utah Administrative Code;

I.B.1.d Construction/demolition waste as defined by 19-6-102(4) Utah Code Annotated;

I.B.1.e Special waste as allowed by R315-315 of the Utah Administrative Code and authorized in section III-I of this Permit and limited by this section;

I.B.1.f Conditionally exempt small quantity generator hazardous waste as specified in R315-303-4(7)(a)(i)(B) of the Utah Administrative Code; and

I.B.1.g PCB’s as specified by R315-315-7(2) of the Utah Administrative Code.

I.B.1.h The Permittees are authorized under this Permit to receive PCB wastes as defined in R315-315-7(3)(b) of the Utah Administrative Code.

I.C. Prohibited Waste

I.C.1. Hazardous waste as defined by R315-1 and R315-2 of the Utah Administrative Code except as allowed in permit condition I.B.1.f (Acceptable Waste) above;

I.C.2. Containers larger than household size (five gallons) holding any liquid; non-containerized material containing free liquids; or any waste containing free liquids in containers larger than five gallons;

I.C.3. PCB's as defined by R315-301-2 of the Utah Administrative Code, except as allowed in Section I.B.1.g (Acceptable Waste) of this Permit.

I.C.4. Regulated asbestos-containing material; and

I.C.5. Any prohibited waste received and accepted for treatment, storage, or disposal at the facility shall constitute a violation of this Permit, of Utah Code Ann. §19-6-101 through 125 and of R315-301 through 320 of the Utah Administrative Code.

I.D. Inspections and Inspection Access

I.D.1. The Permittees shall allow the Director or an authorized representative, or representatives from the Southwest Utah Public Health Department, to enter at reasonable times and:

I.D.1.a Inspect the landfill or other premises, practices or operations regulated or required under the terms and conditions of this Permit or R315-301 through 320 of the Utah Administrative Code;

I.D.1.b Have access to and copy any records required to be kept under the terms and conditions of this Permit or R315-301 through 320 of the Utah Administrative Code;

I.D.1.c Inspect any loads of waste, treatment facilities or processes, pollution management facilities or processes, or control facilities or processes required under this Permit or regulated under R315-301 through 320 of the Utah Administrative Code; and

I.D.1.d Create a record of any inspection by photographic, video, electronic, or any other reasonable means.

I.E. Noncompliance

I.E.1. If monitoring, inspection, or testing indicates that any permit condition or any applicable rule under R315-301 through 320 of the Utah Administrative Code may be or is being violated, the Permittees shall promptly make corrections to the operation or other activities to bring the facility into compliance with all permit conditions or rules.

I.E.2. In the event of noncompliance with any permit condition or violation of an applicable rule, the Permittees shall promptly take any action reasonably necessary to correct the noncompliance or violation and mitigate any risk to the human health or the environment. Actions may include eliminating the activity causing the noncompliance or violation and containment of any waste or contamination using barriers or access restrictions, placing of warning signs, or permanently closing areas of the facility.

I.E.3. The Permittees shall:

I.E.3.a Document the noncompliance or violation in the daily operating record, on the day the event occurred or the day it was discovered;

I.E.3.b Notify the Director by telephone within 24 hours, or the next business day following documentation of the event; and

I.E.3.c Give written notice of the noncompliance or violation and measures taken to protect human health and the environment within seven days after Director notification.

I.E.4. Within thirty days after the documentation of the event, the Permittees shall submit to the Director a written report describing the nature and extent of the noncompliance or violation and the remedial measures taken or to be taken to protect human health and the environment and to eliminate the noncompliance or violation. Upon receipt and review of the assessment report, the Director may order the Permittees to perform appropriate remedial measures including development of a site remediation plan for approval by the Director.

I.E.5. In an enforcement action, the Permittees may not claim as a defense that it would have been necessary to halt or reduce the permitted activity in order to maintain compliance with R315-301 through 320 of the Utah Administrative Code and this Permit.

I.F. Revocation

I.F.1. This Permit is subject to revocation if the Permittees fail to comply with any condition of the Permit. The Director will notify the Permittees in writing prior to any proposed revocation action and such action shall be subject to all applicable hearing procedures established under R305-7 of the Utah Administrative Code and the Utah Administrative Procedures Act.

I.G. Attachment Incorporation

I.G.1.a Attachments to this Permit are incorporated by reference into this Permit and are enforceable conditions of this Permit, as are documents incorporated by reference into the attachments. Language in this Permit supersedes any conflicting language in the attachments or documents incorporated into the attachments.

I.H. Design and Construction

I.H.1.a The Permittees shall construct any landfill cell, sub-cell, run-on diversion system, runoff containment system, waste treatment facility, leachate handling system, or final cover in accordance with R315-301 thru 320 of the Utah Administrative Code. Prior to construction of any landfill cell, sub-cell, engineered control system, waste treatment facility, leachate handling system, or final cover, the Permittees shall submit construction design drawings and a Construction Quality Control and Construction Quality Assurance (CQC/CQA) Plans to the Director for approval. Approved design drawings and CQC/CQA plans will be incorporated into this permit following the permit modification procedures outlined in Condition IV.A.

I.H.1.b Subsequent to construction, the Permittees shall notify the Director of completion of construction of any landfill cell, sub-cell, engineered control system, waste treatment facility, or final cover. Landfill cells may not be used for treatment or disposal of waste until all CQC/CQA documents and construction-related documents, including as-built drawings, are approved by the Director and this permit has been modified to reflect these changes. The Permittees shall submit as-built drawings for each construction event that are stamped and approved by an engineer registered in the State of Utah.

I.H.1.c The Permittees shall notify the Director of any proposed incremental closure, placement of any part of the final cover, or placement of the full final cover. Design approval must be received from the Director and this permit modified prior to construction. The design shall be accompanied by a CQC/CQA Plan, for each construction season where incremental or final closure is performed.

I.H.1.d A qualified party, independent of the owner and the construction contractor, shall perform the quality assurance function on liner components, cover components, and other testing as required by the approved CQC/CQA Plan. The results shall be submitted to the Director as part of the as-built drawings.

I.H.1.e All engineering drawings submitted to the Director shall be stamped and approved by a professional engineer with a current registration in Utah.

I.H.1.f If ground water is encountered during excavation of the landfill, the Director shall be notified immediately, and a contingency plan implemented or alternative construction design developed and submitted for approval.

I.H.2. Run-On Control

I.H.2.a The Permittees shall construct drainage channels and diversions as specified in the Attachment 1 of the Plan of Operation and shall maintain them at all times to effectively prevent runoff from the surrounding area from entering the landfill.

I.H.3. Equivalent Design

The Permittees may propose to the Director a landfill liner design that uses a geosynthetic clay liner in place of the clay component of the liner required by R315-303-3(3)(a)(ii) of the Utah Administrative Code. The proposed liner may be used upon approval by the Director as outlined in R315-303-3(3)(c)(ii).

II. LANDFILL OPERATION

II.A. Plan of Operation

II.A.1. The Permittees shall keep the Plan of Operation in Attachment 1 on site, at the landfill or at the location designated in section II.J.1 of this Permit. The Permittees shall operate the landfill in accordance with the Plan of Operation. If necessary, the Permittee may modify the Plan of Operations in accordance with R315-301 through 320 of the Utah Administrative Code. The modification shall be approved by the Director in accordance with R315-311-2(1) of the Utah Administrative Code. The Permittees shall note any modification to the Plan of Operation in the daily operating record.

II.A.2. Security

II.A.2.a.(i) The Permittees shall operate the Landfill so that unauthorized entry to the facility is restricted. The Permittees shall:

II.A.2.a.i.A Lock all facility gates and other access routes during the time the landfill is closed.

II.A.2.a.i.B Have at least 2 persons employed by the Permittees at the landfill during all hours that the landfill is open.

II.A.2.a.i.C Construct all fencing and any other access controls as shown in the Attachment #1 to prevent access by persons or livestock by other routes.

II.B. Training

II.B.1. The Permittees shall provide training for on-site personnel in landfill operation, including waste load inspection, hazardous waste identification, and personal safety and protection.

II.C. Burning of Waste

II.C.1. Intentional burning of solid waste is prohibited and is a violation of R315-303-4(2)(b) of the Utah Administrative Code.

II.C.2. The Permittees shall extinguish all accidental fires as soon as reasonably possible.

II.D. Daily Cover

II.D.1. The Permittees shall completely cover the solid waste received at the landfill at the end of each working day with a minimum of six inches of earthen material.

II.D.2. The Permittees may use an alternative daily cover material when the material and the application of the alternative daily cover meets the requirements of R315-303-4(4)(b) through (e) of the Utah Administrative Code.

II.E. Ground Water Monitoring

II.E.1. The Permittees shall monitor the ground water underlying the landfill in accordance with the Ground Water Monitoring Plan and the Ground Water Monitoring Quality Assurance/Quality Control Plan in Attachment 2. If necessary, the Permittee may modify the Plan of Operations in accordance with R315-301 through 320 of the Utah Administrative Code. The modification shall be approved by the Director in accordance with R315-311-2(1) of the Utah Administrative Code. The Permittees shall note in the daily operating record any modification to the Ground Water Monitoring Plan and the Ground Water Monitoring Quality Assurance/Quality Control Plan.

II.F. Gas Monitoring

II.F.1. The Permittees shall monitor explosive gases at the landfill in accordance with the Gas Monitoring Plan contained in Attachment 1and shall otherwise meet the requirements of R315-303-3(5) of the Utah Administrative Code. If necessary, the Permittee may modify the Plan of Operations in accordance with R315-301 through 320 of the Utah Administrative Code. The modification shall be approved by the Director in accordance with R315-311-2(1) of the Utah Administrative Code. The Permittees shall note any modification to the Gas Monitoring Plan in the daily operating record. Quarterly landfill gas monitoring shall be monitored and recorded using the appropriate inspection form in Attachment 3 of this permit.

II.F.2. If the concentrations of explosive gases at any of the facility structures, at the property boundary, or beyond the property boundary ever exceed the standards set in R315-303-2(2)(a) of the Utah Administrative Code, the Permittees shall:

II.F.2.a Immediately take all necessary steps to ensure protection of human health and notify the Director;

II.F.2.b Within seven days of detection, place in the daily operating record the explosive gas levels detected and a description of the immediate steps taken to protect human health;

II.F.2.c Implement a remediation plan that meets the requirements of R315-303-3(5)(b) of the Utah Administrative Code;

II.F.2.d Submit the plan to, and receive approval from, the Director prior to implementation.

II.F.2.e The Permittees shall operate and maintain the active landfill gas collection system consisting of vertical gas extraction wells installed within the unlined landfill cell, vapor extraction wells along the property boundary, a blower and flare system to collect and treat the gas, and any soil gas monitoring wells located along the facility boundary as necessary to meet the requirements of R315-303-3(5) of the Utah Administrative Code.

II.G. Waste Inspections

II.G.1. The Permittees shall visually inspect incoming waste loads to verify that no wastes other than those allowed by this permit are disposed in the landfill. The Permittees shall conduct a complete waste inspection at a minimum frequency of 1 % of incoming loads, but no less than one complete inspection per day using forms in Attachment 3. The Permittees shall select the loads to be inspected on a random basis.

II.G.2. The Permittees shall inspect all loads suspected or known to have one or more containers capable of holding more than five gallons of liquid to ensure that each container is empty using the appropriate form in Attachment 3.

II.G.3. The Permittees shall inspect all loads that the Permittees suspect may contain a waste not allowed for disposal at the landfill using forms in Attachment 3.

II.G.4. The Permittees shall conduct complete random inspections as follows:

II.G.4.a The Permittees shall conduct the random waste inspection at the working face or an area designated by the Permittees.

II.G.4.b The Permittees shall direct that loads subjected to complete inspection be unloaded at the designated area;

II.G.4.c Loads shall be spread by equipment or by hand tools;

II.G.4.d Personnel trained in hazardous waste recognition and recognition of other unacceptable waste shall conduct a visual inspection of the waste; and

II.G.4.e Personnel conducting the inspection shall record the results of the inspection on the appropriate waste inspection form in Attachment 3. The Permittees shall place the form in the daily operating record at the end of the operating day.

II.G.4.f The Permittees or the waste transporter shall properly dispose of any waste found that is not acceptable at the facility at an approved disposal site for the waste type and handle the waste according to the rules covering the waste type.

II.H. Disposal of Special Wastes

II.H.1. If a load of incinerator ash is accepted for disposal, the Permittees shall transport it to the place of disposal in such a manner as to prevent leakage or the release of fugitive dust. The Permittees shall completely cover the ash with a minimum of six inches of material, or the Permittees shall use other methods or material, if necessary, to control fugitive dust. The Permittees may use ash for daily cover when its use does not create a human health or environmental hazard.

II.H.2. The Permittees may dispose of animal carcasses in the landfill working face and shall cover them with other solid waste or earth by the end of the operating day in which the carcasses are received. Alternatively, the Permittees may dispose of animal carcasses in a special trench or pit prepared for the acceptance of dead animals. If a special trench is used, the Permittees shall cover animals placed in the trench with six inches of earth by the end of each operating day. The Permittees shall handle and dispose of asbestos waste in accordance with R315-315-2 of the Utah Administrative Code.

II.I. Self-Inspections

II.I.1. The Permittees shall inspect the facility to prevent malfunctions and deterioration, operator errors, and discharges that may cause or lead to the release of wastes or contaminated materials to the environment or create a threat to human health or the environment. The Permittees shall complete these general inspections no less than quarterly, utilizing the inspection form in Attachment 3. Inspections shall cover the following areas: Waste placement, compaction, cover; cell liner; leachate systems; fences and access controls; roads; run-on/run-off controls; ground water monitoring wells; final and intermediate cover; litter controls; and records. The Permittees shall place a record of the inspections in the daily operating record on the day of the inspection. The Permittees shall correct all problems identified in the inspections in a timely manner and document the corrective actions in the daily operating record.

II.J. Recordkeeping

II.J.1. The Permittees shall maintain and keep on file at Washington County Landfill, Inc. office a daily operating record and other general records the landfill operation as required by R315-302-2(3) of the Utah Administrative Code. The landfill operator, or other designated personnel, shall date and sign the daily operating record at the end of each operating day. Each record to be kept shall contain the signature of the appropriate operator or personnel and the date signed. The daily operating record shall consist of the following two types of documents:

II.J.1.a Records related to the daily landfill operation or periodic events including:

II.J.1.a.(i) The number of loads of waste and the weights or estimates of weights or volume of waste received each day of operation and recorded at the end of each operating day;

II.J.1.a.(ii) Major deviations from the approved plan of operation, recorded at the end of the operating day the deviation occurred;

II.J.1.a.(iii) Results of monitoring required by this Permit, recorded in the daily operating record on the day of the event or the day the information is received;

II.J.1.a.(iv) Records of all inspections conducted by the Permittees, results of the inspections, and corrective actions taken, recorded in the record on the day of the event.

II.J.1.b Records of a general nature including:

II.J.1.b.(i) A copy of this Permit, including the Permit Application;

II.J.1.b.(ii) Results of inspections conducted by representatives of the Director, and of representatives of the Southwest Utah Public Health Department, when forwarded to the Permittees;

II.J.1.b.(iii) Closure and Post-closure care plans; and

II.J.1.b.(iv) Records of employee training.

II.K. Reporting

II.K.1. The Permittees shall prepare and submit to the Director an Annual Report as required by R315-302-2(4) of the Utah Administrative Code. The Annual Report shall include: the period covered by the report, the annual quantity of waste received, an annual update of the financial assurance mechanism, any leachate analysis results, all ground water monitoring results, the statistical analysis of ground water monitoring results, the results of gas monitoring, the quantity of leachate pumped, and all training programs completed.

II.L. Roads

II.L.1. The Permittees shall improve and maintain all access roads within the landfill boundary that are used for transporting waste to the landfill for disposal to assure safe and reliable all-weather access to the disposal area.

II.M. Litter Control

II.M.1. Litter resulting from operations of the landfill shall be minimized as outlined in Attachment 1. In addition to the litter control plans, the Permittees shall implement the following procedures when high wind conditions are present:

II.M.1.a Reduce the size of the tipping face;

II.M.1.b Reduce the number of vehicles allowed to discharge at the tipping face at one time;

II.M.1.c Orient vehicles to reduce wind effects on unloading and waste compaction;

II.M.1.d Reconfigure tipping face to reduce wind effect;

II.M.1.e Use portable and permanent wind fencing as needed; and

II.M.1.f Should high winds present a situation that the windblown litter cannot be controlled, the Permittees shall cease operations of the landfill until the winds diminish.

III. CLOSURE REQUIREMENTS

III.A. Closure

III.A.1. The Permittees shall install final cover of the landfill as shown in Attachment 4. The final cover shall meet, at a minimum, the standard design for closure as specified in the R315-303-3(4) of the Utah Administrative Code plus sufficient cover soil or equivalent material to protect the low permeability layer from the effects of frost, desiccation, and root penetration. The Permittees shall submit to the Director a quality assurance plan for construction of the final landfill cover, and approval of the plan shall be received from the Director prior to construction of any part of the final cover at the landfill. A qualified person not affiliated with the Permittees or the construction contractor shall perform permeability testing on the re-compacted clay placed as part of the final cover.

III.A.2. Title Recording

III.A.2.a The Permittees shall meet the requirements of R315-302-2(6) of the Utah Administrative Code by recording a notice with the Washington County Recorder as part of the record of title that the property has been used as a landfill. The notice shall include waste disposal locations and types of waste disposed. The Permittees shall provide the Director the notice as recorded.

III.B. Post-Closure Care

III.B.1. The Permittees shall perform post-closure care at the closed landfill in accordance with the Post-Closure Care Plan in Attachment 4. Post-closure care shall continue until all waste disposal sites at the landfill have stabilized and the finding of R315-302-3(7)(c) of the Utah Administrative Code is made.

III.C. Financial Assurance

III.C.1. The Permittees shall keep in effect and active the currently approved financial assurance mechanism in Attachment 5, or another mechanism that meets the requirements of R315-309 of the Utah Administrative Code and is approved by the Director to cover the costs of closure and post-closure care at the landfill. The Permittees shall adequately fund and maintain the financial assurance mechanism(s) to provide for the cost of closure at any stage or phase or anytime during the life of the landfill or the permit life, whichever is shorter, and the Permittees shall fully fund the trust fund within ten years of the date waste is first received at the landfill.

III.C.2. Enclosed in Attachment 6 are current closure and post-closure cost-estimates. With each annual revision of the closure and post-closure care cost estimate, the Permittees shall determine the annual payments to be made to the trust fund by the following formula:

$$NP=[CE-CV]/Y$$

where NP is the next payment, CE is the current cost estimate for closure and post-closure care (updated for inflation or other changes), CV is the current value of the trust fund, and Y is the number of years remaining in the pay-in period.

III.D. Financial Assurance Annual Update

III.D.1. The Permittees shall submit an annual revision of closure and post-closure costs for inflation and financial assurance funding as required by R315-309-2(2) of the Utah Administrative Code, to the Director as part of the annual report.

III.E. Closure Cost and Post-Closure Cost Revision

III.E.1. The Permittees shall submit a complete revision of the closure and post-closure cost estimates by the Closure Cost Revision Date listed on the signature page of this Permit and any time the facility is expanded, any time a new cell is constructed, or any time a cell is expanded.

IV. ADMINISTRATIVE REQUIREMENTS

IV.A. Permit Modification

IV.A.1. Modifications to this Permit may be made upon application by the Permittees or by the Director. The Permittees shall be given written notice of any permit modification initiated by the Director.

IV.B. Permit Transfer

IV.B.1. This Permit may be transferred to a new permittee or new Permittees by complying with the permit transfer provisions specified in R315-310-11 of the Utah Administrative Code.

IV.C. Expansion

IV.C.1. This Permit is for a Class I Landfill. The permitted landfill shall operate according to the design and Operation Plan described and explained in this Permit. Any expansion of the current footprint, but within the property boundaries shall require submittal of plans and specifications to the Director. The plans and specifications shall be approved by the Director prior to construction.

IV.D. Expiration

IV.D.1. If the Permittees desire to continue operating this landfill after the expiration date of this Permit, the Permittees shall submit an application for permit renewal at least six months prior to the expiration date, as shown on the signature page of this Permit. If the Permittees submit a timely permit renewal application and the permit renewal is not complete by the expiration date, this Permit shall continue in force until renewal is completed or denied.

IV.E. Contract Approval

IV.E.1. The Permittees shall receive waste only from local governments that have contracts with the facility owner. All new contracts and changes in existing contracts shall be reviewed and receive approval from the Director prior to receipt of waste.

Attachment 1

Plan of Operation

5. Unstable Areas

   Not Applicable

6. Closure of Existing Municipal Solid Waste Landfill Units

   Not Applicable

Plan of Operation (R315-310-3(1)e and R315-302-2(2)

Description Of On-Site Waste Handling Procedures And An Example Of The Form That Will Be Used To Record The Weights Or Volumes Of Waste Received (R315-302-2(2)(b) And R315-310-3(1)(f):

All solid wastes deposited in the landfill will first cross a truck scale located adjacent to the scale house at the front gate. Haulers of the solid waste are divided into two categories by Washington County Landfill, Inc. as being either licensed or unlicensed. Commercial solid waste haulers are considered licensed haulers as they must obtain a license from Washington County Solid Waste Special Service District #1 to operate commercially in the landfill. The application that will be used by Washington County Solid Waste Special Service District #1 is contained in Attachment D of this permit application. Along with the application, each licensed hauler must submit proof of insurance with certification to Washington County, a copy of their current city or county business license, and their truck(s) number, serial number, body capacity, weight, and date of manufacture. Licensing is required of each commercial hauler annually.

All other solid waste haulers are classified as unlicensed. Included as unlicensed haulers are general contractors hauling construction and demolition materials and private citizens who haul their own trash and yard wastes.

Regardless of whether a solid waste hauler is classified as licensed or unlicensed, they are required to stop at the scale house and be weighed. Attachment E of this permit application contains a copy of a weigh ticket each hauler receives which is the basis for the assessment of the tipping fees.

A copy of the form used by Washington County Landfill, Inc. to track those loads hauled into the landfill by licensed and unlicensed haulers is presently contained in Attachment F of this permit application. When tires are brought to the landfill, the appropriate information is logged on a form for tracking and billing purposes. This form is also contained in Attachment E of this permit application.

After the initial stop at the scale house, the haulers of solid waste then proceed to the landfill site, and are directed to the active face by way of signing. As the haulers approach the working face of the landfill, they are further directed by the landfill spotter to a specific unloading location. As the waste material is off loaded, it is the spotter's responsibility to visually inspect the waste to determine the specific composition of the load being deposited. Provided at the

landfill are 6 drop boxes to be used by residents of the district. These drop boxes are taken to the active face and off loaded. A camera is installed to monitor the activity at the drop boxes.

All waste material placed in the landfill cell is compacted to minimize air space usage and maximize unit weight. Waste is spread in lifts and compacted with a Cat D7 dozer and Cat 836 compactor to achieve maximum compaction.

At the end of each production day the solid waste placed in the landfill is covered with six inches of soil cover material or an Alternative Daily Cover (ADC). Following are the three ADC's that may be utilized.

1. Compost

Compost may be used as an ADC when required.

The current daily cover needs are met by Alternative Daily Covers (ADCs) or the soil excavated from on-site. When either of these sources becomes inadequate, the importation of soil cover material from a nearby gravel crushing operation will be utilized. This operation procedure will continue through the next permit period.

The following special handling procedures apply for certain waste streams:

1. Odoriferous Wastes - All odoriferous wastes placed in the landfill cell are covered with six inches of cover material and/or ADC within the current work period or day's end.
2. Ash- All ash which presents a blowing concern will be covered with six inches of material and/or ADC within four hours after disposal of the waste in the unit before day's end. Water may be sprayed on the ash if required to control dust emissions during covering activities.
3. Bulky Wastes - The landfill is not utilized as an appliance or automobile junkyard. If these items are delivered to the landfill, they are removed and taken to a recycler.
4. Water Treatment or Wastewater Treatment Sludges, Non-Hazardous or Exempt Petroleum Contaminated Soils - Sludges including exempt petroleum contaminated soils, grease trap materials, oily water, and sand trap wastes that fail the Paint Filter Liquids Test method will be solidified/evaporated prior to their disposal in the landfill unit. Solidification methods include the addition of absorbent materials, after which the solidified wastes must pass the Paint Filter Liquids Test method before disposal. These solidified wastes are then placed on the working face and covered with other solid wastes or cover material. Sludges consisting of exempt petroleum contaminated soils may be used as daily cover. Sludges which are brought into the landfill shall be certified as non-hazardous by the generator. Analytical data may be required to certify waste as non-hazardous.

Generators/haulers of non-hazardous or exempt petroleum contaminated soils, water treatment or wastewater treatment sludges will be encouraged to solidify their sludges to ensure passage of the Paint Filter Liquids test prior to their placement in the landfill. However, the generator/hauler of these sludges may bring sludges which do not pass the Paint Filter Liquids test to the landfill for solidification and disposal. Upon arrival at the scale house, the gate keeper will verify certification as non-hazardous and direct the hauler to the Sludge Solidification Site. At this point a landfill operator will visually inspect the load prior to unloading to verify content. If it does not appear that the sludge will then pass the Paint Filter Liquids test, it will be distributed on the ground at the Sludge Solidification Site. The sludge will be placed on the solidification site by means of a tremie or flexible metal spout to allow for even distribution. As the sludge is being unloaded, the hauler will proceed under the direction of the operator at a speed which will minimize ponding of the liquids. Upon completion of unloading, all valves and external openings of the hauler's vehicle will be stopped prior to the hauler's departure from the Sludge Solidification Site. The sludge at the solidification site will be blended with native absorbent material until the sludge passes the Paint Filter Liquids test. The solidified sludges will then be placed at the landfill working face for disposal.

As liquids in delivered sludges are evaporated or absorbed into the surrounding soils, the dikes will be leveled. The impacted soils which made up the dikes and floor will be blended with other native absorbent material until the soil passes the Paint Filter Liquids test. The soils which pass this test may be stockpiled and used as a source of daily cover material.

5. Tires - It is the policy of Washington County Landfill, Inc. to have the landfill stockpile all tires brought into the landfill. Tires are removed from the site and delivered to a commercial recycler of tires.

6. Dead Animals - Animal carcasses received at the facility will be deposited onto the working face at or near the bottom of the cell with other solid waste, or into a separate disposal trench where they will be covered daily with a minimum of six inches of earth to prevent odors and the propagation and harborage of rodents and insects.

Schedule For Conducting Inspections And Monitoring, And Examples Of The Forms That Will Be Used To Record The Results Of The Inspections And Monitoring (R315-302-2(2)(c), R315-302-2(5)(a), And R315-310-3(1)(g):

Inspections of the facility will be conducted quarterly by Washington County Landfill, Inc. or its representative. The purpose of these inspections is to prevent any problems with the facility and to identify any deterioration of the facility and operator errors or malfunctions which may cause a release of wastes to the environment or threaten human health. The inspection logs will be kept at the facility in the scale house. Attachment G of this permit application is an example of the inspection log. All inspections will conform to subsection R315-302-2(5)(a) of

the Solid Waste Permitting and Management Rules. The Washington County Landfill, Inc. inspection log program will consist of a summary of the following information:

1. Total Containment Evaporation Pond - Inspection of inlet and overflow structures for blockage, failure, and erosion. Inspection of rock-lined dikes and rock-lined drainage channel around the pond for potential erosion and washout. Inspection of lining systems for possible damage from men, equipment, root systems of surrounding vegetation, and burrowing animals will be conducted. Inspection of fence line and gates to ensure security of the total containment evaporation pond facility will be conducted. Inspection of containment dikes that lie below the pond will occur.
2. 18" Diameter Leachate Outfall Line - Inspection of manholes and outfall line for signs of blockage, leakage, or infiltration.
3. 12" Diameter Leachate Collection Line - Inspection of cleanouts and collection line for signs of blockage and failure. Should it be suspected that either has occurred to the collection line, a mandrel will be pulled through the suspected section to determine the extent and location of the damage.
4. Run-off Drainage Channel - Inspection of the lined channel and culverts for erosion and blockage.
5. Run-on Drainage Channel - Inspection of the rock-lined channel and culverts for erosion and blockage.
6. Perimeter Fencing and Access Gates - Inspection of fencing for breach of security and litter accumulation. Inspection of gates and other points of access for security and restriction of unauthorized access will be conducted.
7. Landfill Cell - Inspection of the active landfill face for placement and compaction of imported waste stream. Inspection of the access roads for settlement and stability and inspection of covered portions of the landfill cell for erosion and excessive settlement.

Contingency Plans In The Event Of A Fire Or Explosion (R315-302-2(2)(d):

Washington County Landfill, Inc. will implement various procedures to minimize and control fire, explosion, and release of explosive gases. Training for facility operations personnel will be provided. The procedures will include:

1. Washington County Landfill, Inc. will provide training to all facility employees regarding fire prevention and firefighting at the facility.
2. All supervisory personnel will maintain radio communication with personnel in the scale house and the Washington County Landfill, Inc. office. If required, the Washington County Landfill, Inc. office will contact the Washington City Fire Department for emergency assistance.

3. Dozers will be available to spread burning materials in the landfill so that water can be applied, to smother the burning material with non-ignitable material, or to build berms to contain the fire.
4. Stockpiled soil cover materials will be available in the vicinity to spread on burning materials.
5. All facility vehicles will contain a portable fire extinguisher which can be utilized to extinguish small fires.
6. A fire hydrant is located within 300 feet of the scale house. The hydrant is connected to a 36" water transmission line running through the landfill property. Water from this hydrant will be used to suppress fires.
7. In case off-site firefighting assistance is needed, the Washington City Fire Department will respond. The Washington City Fire Department should be able to respond to a fire within 15 minutes.

Corrective Action Programs To Be Initiated If Ground Water Is Contaminated (R315-302-2(2)(e):

In the event ground water contamination is detected, an appropriate remediation plan will be developed. The plan may include pumps placed in monitoring Well 1 and monitoring Well 2 with the intent of removing the perched water from the ground, therefore stopping transmission of the release. Water pumped from the monitoring wells will be land applied within the boundaries of the landfill facility where it will be evaporated. In the event that the perched aquifer is too large to practically draw down, pumping will continue until all constituents being analyzed are shown to be at or below established background values. This plan may be modified upon completion of investigations related to ground water contamination.

Contingency Plans For Other Releases, E.G. Explosive Gases Or Failure Of Run-Off Collection System (R315-302-2(2)(f)):

In the event of a run-off containment system failure, the procedures for taking corrective action will include:

1. Washington County Landfill, Inc. will provide necessary training to facility employees regarding landfill emergency procedures.
2. All supervisory personnel will maintain radio communication with personnel in the scale house and the Washington County Landfill, Inc. office. The Washington County Landfill, Inc. office would then be able to contact the Washington County Emergency Management Personnel as required.

3. Dozers and compactors and other earth-moving equipment will be available to move earth material as necessary to seal off any breach to the run-off containment system until other permanent corrective measures can be taken.

In the event of a gas explosion, the procedures for taking corrective action will include:

1. Washington County Landfill, Inc. will provide necessary training to facility employees regarding landfill emergency procedures.
2. All supervisory personnel will maintain radio communication with personnel in the scale house and the Washington County Landfill, Inc. office. The Washington County Landfill, Inc. office would then be able to contact the Washington County Emergency Management Personnel as required.
3. Dozers and compactors and other earth-moving equipment will be available to move earth material as necessary to contain an emergency.

In the event of an overflow in the Total Containment Evaporation Pond, the procedures for taking corrective action will include:

1. Washington County Landfill, Inc. will provide necessary training to facility employees regarding landfill emergency procedures.
2. All supervisory personnel will maintain radio communication with personnel in the scale house and the Washington County Landfill, Inc. office. The Washington County Landfill, Inc. office would then be able to contact the Washington County Emergency Management Personnel as required.
3. Dozers and compactors and other earth-moving equipment will be available to move earth material as necessary to seal off any breach to the run-off containment system until other permanent corrective measures can be taken.
4. Contained waste water will be pumped into a water truck and returned to the Total Containment Evaporation Pond, solidified with on-site material and hauled to the landfill and used as daily cover, or taken to the local sewer district for disposal. Upon removal of the captured waste water, the affected native soil material will be removed and used for daily cover on the landfill cell.
5. Any damage to the Total Containment Evaporation Pond caused by the overflow will be repaired and the area will be restored to its original condition.

Plan To Control Fugitive Dust Generated From Roads, Construction, General Operations, And Covering The Waste (R315-302-2(2)(g):

It is Washington County Landfill, Inc. policy that all unpaved traveled roadways within the landfill facility are sprayed with water and that waste material be wetted or covered as necessary to control dust. Also, any solid waste material, such as ash, which presents a blowing concern, is covered with six inches of material or an ADC by the end of the day of disposal or

water is sprayed on the waste material to control dust emissions. Air emissions will fall within state Air Quality Standards. Operator will log water truck loads.

Plan For Litter Control And Collection (R315-302-2(2)(h):

Wind-blown litter control will be performed by use of fencing, daily cover, and ADC. Litter collection will be performed by the Spotter at the active face and other landfill personnel as required. Fencing will be inspected for wind-blown litter as required to ensure containment and disposal of the litter materials.

Description Of Maintenance Of Installed Equipment (R315-302-2(2)(i)):

Ground water monitoring equipment will be maintained in accordance with the landfill's groundwater monitoring plan and equipment manufacturers' instructions.

The current design of the leachate collection system and the contaminated run-off waters collection system operate in conjunction with the old system. The leachate collection system in the current and future cells consist of a network of leachate collection pipes and were sized to carry the anticipated leachate volumes over the life of the landfill. Each new cell has a sump and a riser for periodic extraction of leachate. The extracted leachate is recirculated back to the landfill. The old system which mainly served the old landfill, consists of a French drain that collects very little leachate from the old landfill and discharges into the Total Containment Evaporation Pond for evaporation. The Total Containment Evaporation Pond is lined with a membrane liner to prevent seepage of the leachates into the surrounding ground. Maintenance of the leachate collection system in the lined cells is via a cleanout riser pipe installed along each sump riser and at the other end of the leachate pipe header as a second access point. The leachate pump in the sump is maintained and serviced regularly for proper and efficient operation. Maintenance of the channel system and the Total Containment Evaporation Pond will consist mainly of weed control.

Methane gas monitoring is performed quarterly using a hand-held probe. The hand-held probe is calibrated prior to each use by the gas sample collector. This will be done in conformance with the manufacturer's recommendations. The calibration of the probe will then be documented on the landfill gas quarterly monitoring results form. (See Attachment H of this permit application). Periodic inspection and repairs/replacements will be made to the LFG control system as necessary, including wellheads and collection piping system due to damage caused by accident, settlement, environmental factors and aging. Wellheads and casings will be adjusted vertically to conform to the surface elevation of the landfill. During each daily monitoring event at the blower-flare facility, all chart recorders should be checked for proper performance. Equipment performance should be observed during each facility visit. Condensate drain systems should be checked to make sure that they are functioning as designed. Condensate sumps and pumps should be serviced frequently.

Procedures For Excluding The Receipt Of Prohibited Hazardous Or PCB Containing Wastes (R315-302-2(2)(j):

Inspections of wastes for hazardous materials or waste containing PCBs will be performed at random or as deemed necessary by Washington County Landfill, Inc. A copy of the Random Load Inspection Record form is provided in Attachment I of this permit application. Although private individuals who haul only their personal solid waste are exempt, any load, private or commercial, suspected of containing hazardous materials or wastes containing PCBs will be subject to inspection.

The randomly inspected loads, as well as loads suspected of containing hazardous materials or wastes containing PCBs, will be off loaded at a predetermined inspection site. This inspection site will always be located away from the current working face of the landfill. Upon completion of the inspection Washington County Landfill, Inc. will remove the solid wastes passing inspection and place them at the working face of the landfill for burial. If inspection reveals that the load contains suspected hazardous materials or wastes containing PCBs the following measures will be taken by landfill personnel:

1. Immediately notify the Generator
2. Notify the Director of the DWMRC within 24 hours
3. Restrict the area from public access and from facility personnel
4. Assure proper cleanup, transport and disposal of the waste as per DWMRC recommendations

Inspection training of the landfill personnel will be performed by a qualified person from Republic Services.

Extensive documentation will be maintained on special waste received. Individual files will be maintained for each generator. Each file will typically contain the following information:

1. Profile sheet
2. Appropriate analytical data
3. Correspondence with the generator.

Procedures For Controlling Disease Vectors (R315-302-2(2)(k):

Various procedures are incorporated into the operation of the landfill to prevent, as much as possible, the transmittal of disease through disease vector control. Washington County Landfill, Inc. landfill operating procedures are intended to control disease vectors such as rodents, insects, and air borne particulates.

It is Washington County landfill, Inc. policy to keep the working face exposure to a minimum. In so doing, compaction efforts are maximized. Proper compacting procedures will help ensure not only the most effective use of available landfill space, but also reduces the likelihood of a rodent infestation.

To prevent an infestation of insects at the landfill, it is the policy of Washington County Landfill, Inc. to cover all odoriferous wastes with 6 inches of soil cover weekly.

A Plan For Alternative Waste Handling (R315-302-2(2)(l):

In the event that normal land filling operations are impeded or all together terminated through equipment breakdown or other unforeseen event, then an alternative location within the landfill boundaries will be designated as a temporary handling and stockpiling facility. This alternative location will be as nearly adjacent to the existing working face as possible but maintaining sufficient distance for public safety. It is intended to use the ground which is currently approved for disposal of solid waste as a temporary stockpiling area first. However, should it become necessary to move off the approved site for the safety and general welfare of the public, the temporary stockpiling facility would then be located on ground which is proposed for the next unit to be constructed. As there are 500 acres within the sanitary landfill boundaries, it is unlikely that the occasion would arise that would require the complete closure of the landfill facility. In the event that the entire landfill facility was closed to public access due to a major catastrophe, then an alternative landfill site would need to be located for the temporary solid waste handling and stockpile facility as an emergency measure.

A temporary solid waste handling and stockpile facility would of necessity have to be versatile and mobile yet be conducive to securing the temporarily stockpiled solid waste from wind, salvagers, and animal scavengers. To construct such a facility, temporary fencing would be constructed along the perimeter of the proposed temporary stockpiling area. These fenced in areas could easily be enlarged or reduced in size as necessary to accommodate the expanding or reducing stockpile size. Sizing each individual stockpile area would be important in combating the effects of wind. In addition to securing the stockpiling area with fencing, it would also be necessary to channel and berm completely around the solid waste stockpiling area to protect the facility and surrounding area from run-on/run-off water and leachate.

After the working face of the existing landfill unit was re-established and was deemed safe to resume standard landfill operating practices, the solid waste which had previously been stockpiled at the temporary solid waste handling and stockpiling facility would then be transported to the landfill unit and deposited at the working face for compaction and burial. Upon completion of the removal of all the solid waste from the temporary stockpiling facility, the fencing would then be removed. Any impacted native soil would be removed and used as daily cover in the Washington County Landfill Facility. All run-on/run-off waters and leachate collected in the stockpiling area perimeter channel would then be pumped out and used as dust control at the landfill site. All channels would then be backfilled, all berms would be leveled,

and the entire temporary stockpiling area would be scarified and contoured to its original condition.

A General Training And Safety Plan For Site Operations (R315-302-2(2)(o):

The manager of Washington County Landfill, Inc. will ensure that the required safety and training programs are conducted for the employees of the Washington County Landfill Facility. These topics will be taught from the Allied Waste Services Safety and Training Manual. A copy of the safety and training manual will be on file in the office of Washington County landfill, Inc. The order of training may change to suit the needs of the facility. All safety meetings and training will be documented by indicating the topic covered and main points discussed. Employees will be required to sign and date the appropriate forms.

Following is a list of the safety and training topics addressed, by month, over the course of the year.

MONTH	TRAINING TOPICS
January	Adverse Weather
	Hazardous Communication
February	Backing
	PPE – Conduct Hazardous Assessments,
	Industrial Truck Training
	Recertification for Forklift Operators
March	Push, Pull, Lift
	Lock Out/Tag Out
	Conduct Annual LOTO Documented Observations
April	Intersections/Pedestrians
	Accident Prevention
	Signs/Tags
	First Aid/CPR Training for Designated Employees
May	Heat Considerations
	Heat Stress
	Prepare Summer Safety Plans
June	Backing
	Blood Borne Pathogens
July	Rear Collisions
	Emergency Response Training
	Fire Drill
August	Push, Pull, Lift
	Fire Extinguisher Training
	Hearing Conservation
September	Roll-Over
	Spill Prevention
October	Intersection

	Confined Spaces
November	Pedestrians
	Respiratory Protection
	Fall Protection
	Asbestos Safety
	Respirator Fit Tests
December	Drug and Alcohol Awareness

Any Recycling Programs Planned At The Facility (R315-303-4(6)):

The Washington County Landfill Facility has programs to recycle metal and tires. A drop off area is provided for citizens to drop off recyclables.

A composting program has also been implemented at the landfill. The compost is produced by landfill personnel and sold to the public. If a surplus of compost is produced, the extra material may be used as an ADC. The landfill is also providing to the local communities a paint exchange program. Surplus paint is brought to the landfill by the public and exchanged for other paint. The public is not required to take paint with them when they drop off unused paint.

Closure and Post-closure Care Plan (R315-302-2(2)(m)):

The closure and post-closure care plan for the Washington County Landfill Facility will be as cited in **Closure Plan (R315-310-3(1)(h))** and the **Post-Closure Care Plan (R315-310-3(1)(h))** contained in this permit application. The current cost estimates for closure and post closure maintenance was recently updated, in February 2016, and included as Attachment P.

Procedures For The Handling Of Special Wastes (R315-315):

The procedures for handling special wastes is as cited in *Procedures for excluding the receipt of prohibited hazardous or PCB containing wastes (R315-302-2(2)(j))* of this permit application.

Plans And Operation Procedures To Minimize Liquids (R315-303-3(1)(a) and (b)):

The plans and operation procedures to minimize liquids will be as cited in *Description of on-site waste handling procedures and an example of the form that will be used to record the weights or volumes of waste received (R315-302-2(2)(b) And R315-310-3(1)(f)):* of this permit application.

Plans And Procedures To Address The Requirements of R315-303-3(7)(c):

The plans and procedures to address these requirements will be as cited in *Description of on-site waste handling procedures and an example of the form that will be used to record the weights or volumes of waste received (R315-302-2(2)(b) And R315-310-3(1)(f)):* of this permit application.

Plans And Procedures To Address The Requirements of R315-303-3(7)(d):

The Washington County Landfill Facility has erected signs at the entrance of the facility. The signs identify the hours during which the facility is open, what the acceptable wastes are, emergency phone numbers, and the name of the facility.

Plans And Procedures To Address The Requirements of R315-303-3(7)(e):

The plans and procedures to address these requirements will be as cited in *Contingency plans in the event of a fire or explosion (R315-302-2(2)(d))* of this permit application.

Plans And Procedures To Address The Requirements of R315-303-3(7)(f):

The plans and procedures to address these requirements will be as cited in Procedures for controlling disease vectors (R315-302-2(2)(k)): of this permit application.

Plans And Procedures To Address The Requirements of R315-303-3(7)(g):

The Washington County Landfill Facility is operated in a manner that minimizes the active face area. Traffic is managed with safety of operators, equipment, and personnel as the guiding factor.

Plans And Procedures To Address The Requirements of R315-303-3(7)(h):

The traffic at the Washington County Landfill Facility is managed to preclude tracking of waste materials outside of the landfill area. Also, traffic is managed to facilitate safety of operators, equipment, and personnel.

Plans And Procedures To Address The Requirements of R315-303-3(7)(i):

The Washington County Landfill Facility personnel have access to radio, telephones, and vehicles to handle emergencies at the facility.

Plans And Procedures To Address The Requirements Of R315-303-4:

The plans and procedures to address these requirements will be as cited in various sections and of this permit application.

Any Other Site Specific Information Pertaining To The Plan Of Operation Required By The Director (R315-302-2(2)(o)):

Information for this section will be provided upon request by the Director.

Attachment 2

Ground Water Monitoring Plan
and
Ground Water Monitoring Quality Assurance/Quality Control Plan

GROUNDWATER SAMPLING AND ANALYSIS PLAN (GWSAP)

WASHINGTON COUNTY LANDFILL ST. GEORGE, UTAH

Project No: 05-09-21

Prepared for

Washington County Landfill

September 2005

Prepared by:

The Carel Corporation
136 Pecan Street
Keller, TX 76248

TABLE OF CONTENTS

1	**INTRODUCTION**	1
2	**FIELD PROCEDURES**	2
	2.1 Field Sampling Health and Safety Plan	2
	2.2 Sample Event Preparation and QA/QC	2
	2.3 Well Purge	5
	2.4 Monitoring Well Sample Collection	9
	2.5 Record Keeping	11
	2.6 Sample Transport	12
3	**LABORATORY PROCEDURES/ PERFORMANCE STANDARDS**	13
	3.1 Analytical Methods	13
	3.2 Deliverables (General and Supplemental QA/QC)	13
	3.3 Data Quality Objectives	15
4	**SAMPLING FREQUENCY AND REPORTING REQUIREMENTS**	16
	4.1 Background	16
	4.2 Detection Monitoring Events	16
	4.3 Groundwater Analysis Result Submittals	16
5	**STATISTICAL METHODOLOGY - GROUND WATER DATA ANALYSIS**	17
	5.1 Statistically Significant Constituents and Verification Resampling	17
6	**REFERENCES**	18

Tables

1 Background/Detection Monitoring Parameters

Appendix A Field Data Sheet
Appendix B Recommended Containerization and Preservation of Samples
Appendix C Calibration Data Sheet
Appendix D Sample Chain-of-Custody
Appendix E Statistical Analysis Plan

1 INTRODUCTION

The following sampling and analysis plan covers the procedures for collecting representative samples from groundwater monitoring wells and the laboratory requirements for obtaining valid, defensible data. The scope is limited to sampling and analysis requirements and does not include monitor well placement, design and construction, or well development procedures.

The plan is a general requirement for groundwater monitoring sampling and analysis based primarily on the federal requirements in 40 CFR Part 258, current EPA guidance documents, and Utah Administrative Code (UAC) R315-308-2 Solid Waste Permitting and Management Rules.

2 FIELD PROCEDURES

2.1 Field Sampling Health and Safety Plan

A health and safety plan is required for all groundwater sampling events at the Washington County Landfill. Prior to monitoring well purging and sampling, the sampling contractor's Groundwater Sampling Health and Safety Plan must be in place. Designing the site Groundwater Sampling Health and Safety Plan will be the duty of the party performing the actual work.

In addition, each laboratory facility should have their own standard laboratory health and safety plan as required by current OSHA regulations.

2.2 Sample Event Preparation and QA/QC

2.2.1 General Event Preparation

The laboratory performing the groundwater analysis shall supply all necessary coolers, pre-cleaned containers, trip blanks, chemical preservatives, labels, custody seals, and chain-of-custody and shipping forms. All field data shall be entered on a Field Data Sheet (see example provided as Appendix A) or equivalent form. Adequate instructions to the laboratory must be given in advance of each monitoring event. Details concerning any changes to the monitoring plan and/or procedures need to be given to the laboratory prior to the field sampling personnel arriving on the site. A specific contact person shall be established at both the facility and contract laboratory for communication between the two (2) parties.

2.2.2 Sample Container Selection

Sample containers need to be constructed of a material compatible and non-reactive with the material it is to contain. Consult Appendix B, *Recommended Containerization and Preservation of Samples*, to determine the number, type and volume of appropriate containers. The contract laboratory performing the analysis shall supply all the required containers. In special circumstances when the facility must obtain its own containers,

these containers will be purchased from local container distributors with the exception of the septum vials and PTFE (e.g. Teflon®) lined caps required for organic analyses which are available from laboratory supply companies. Metal lids shall not be utilized for any sample containers.

2.2.3 Container Preparation

Sample containers will be purchased as a pre-cleaned product or cleaned in the laboratory in a manner consistent with EPA protocol.

2.2.4 Sample Equipment Preparation

This section outlines the equipment preparation prior to site arrival for a specific monitoring event. This equipment preparation includes minimum decontamination procedures for water level indicator(s), pH/temperature meter, specific conductivity meter, turbidity meter, and filtration device. Operation and calibration of equipment will be as per the manufacturer's instructions. All non-dedicated equipment will be thoroughly cleaned prior to arrival at the site and between sampling points as follows:

- Water Level Indicator(s) - Water level indicator(s) will be decontaminated prior to initial site arrival by hand washing the sensor probe and entire length of tape in a non-phosphate detergent followed by rinsing with deionized water. While the tape is reeled back onto the carrying spool, the tape and probe will be wiped down with a clean dry paper towel.

- Field Parameter (Temperature, pH, Specific Conductivity, Turbidity) Measuring Device(s) – Field parameter measuring device(s) will be decontaminated by hand washing the sample cells in a non-phosphate detergent followed by rinsing with deionized water. Meters will then be checked for proper calibration and operation as per the manufacturer's instructions. Field calibration results will be recorded on a Calibration Data Sheet (Appendix C). Any malfunctioning meters will be replaced prior to packing. Field parameter measuring device(s) will be rinsed with deionized water after each measurement.

- Sampling devices associated with groundwater sampling will be cleaned in non-phosphate detergent, followed by rinsing with deionized water.

Multiple-use equipment (e.g. water level indicators and filter chambers) must be thoroughly decontaminated and cleaned as described in this section to prevent cross contamination from prior use at other facilities. All field instruments must be properly checked and calibrated prior to arrival on-site at a sampling location.

2.2.5 Field QA/QC Samples

Field QA/QC samples consist of two (2) primary areas of quality control. The first part is the quality control of sample contamination, which may occur in the field and/or shipping procedures. This is monitored in the trip blank(s), field blank(s), and the equipment (rinsate) blank(s). A basic description of each is as follows:

- Trip Blank - These samples will be prepared in the laboratory by filling the appropriate clean sample containers with organic-free water and adding the applicable chemical preservative, if any, as indicated in Appendix B for each type of sample. These containers are to be labeled "Trip Blank", the analyses to be performed on each container indicated, and then shipped in the typical transportation cooler to the field and back to the laboratory along with the other sample set containers for a given event. This blank is tested for any contamination that may occur as a result of the containers, sample coolers, cleaning procedures, or chemical preservatives used. Trip blanks shall be taken and analyzed for each sampling event or a minimum of a one (1) in twenty (20) batch per monitoring event for volatile organic compounds (VOCs) only.

- Field Blank - Field blank containers will be prepared in the field at a routine sample collection point during a monitoring event by filling the appropriate sample containers from the field supply of deionized water. This field supply water shall be the same water used for cleaning and decontamination of all field purge and sample equipment. This blank is tested for any contamination that may occur as a result of site ambient air conditions and serves as an additional check for contamination in the containers, sample transport coolers, cleaning procedures, and any chemical preservatives. Field blanks shall be taken and analyzed for each sampling event or a minimum of one (1) per cooler per monitoring event for VOCs.

- Equipment (Rinsate) Blank - These blanks will be prepared in the field immediately following decontamination cleaning procedures on any non-dedicated equipment used for purging, sampling or sample filtration. Following decontamination, field supply organic-free water is passed through the non-dedicated equipment in the same procedure as a groundwater sample. This blank confirms proper field decontamination procedures on non-dedicated equipment utilized in the field. Equipment blanks shall be taken and analyzed for all applicable parameters anytime non-dedicated equipment is used or new equipment is being dedicated to a well at a batch minimum of one (1) in twenty (20) per monitoring event.

Other Field QA/QC Samples - A second area of standard field QA/QC samples are field duplicates.

- Field duplicates are an extra set of samples taken at a particular monitoring point and labeled "Field Duplicate". These are independent samples that are collected as close as possible to the same point in space and time. They are two (2) separate samples taken from the same source, stored in separate containers, and analyzed independently. Field duplicates are useful in documenting the precision of the sampling and analytical process. Samples shall be collected in proper alternating order for the sample point and field duplicate for each parameter (e.g. VOA - VOA, metals - metals, etc.) Field duplicates shall be taken and analyzed at a batch minimum of one (1) in twenty (20) per monitoring event.

Appropriate field QA/QC documentation should be recorded in the field notes (e.g. locations where the field blank or duplicate were collected).

2.3 Well Purge

2.3.1 General Well Purge Information

Purging a monitoring well is just as important as the subsequent sampling of the well. Water standing in a monitor well over a certain period of time may become unrepresentative of formation water because of chemical and biochemical changes which may cause water quality alterations. Prior to monitoring well purge, inspection of the monitoring well integrity will be performed utilizing the Field Data Sheet (Appendix A) or equivalent form.

2.3.2 Water Level Measurement

Prior to any purge or sampling activity at each monitoring well, a water level measurement is required to be taken. Measurement of the static water level is important in determining the hydrogeologic characteristics of the subsurface (e.g. upgradient and downgradient). The water level indicator will be an electronic sensor device, which signals by audio or light indicator when the probe contacts the water.

Water level indicator equipment will be constructed of chemically inert materials and, during mobilization preparation and following each monitoring point, be decontaminated with a non-phosphate detergent followed with multiple deionized water rinses. Water levels will be measured with a precision of +/- 0.01 foot. Water level indicator devices will be periodically checked for proper calibration. Calibration shall be performed at a frequency recommended by the manufacturer. Each monitor well shall have a reference elevation point located and properly marked at the top of the riser casing established by a licensed surveyor. This reference point elevation is measured in relation to Mean Sea Level (MSL).

Ground water elevations in wells that monitor the same waste management area must be measured within a forty-eight (48) hour period to avoid temporary variations in groundwater flow, which could preclude accurate determination of groundwater flow rate and direction.

2.3.3 Purge Equipment and Procedure

Well purging will take place from hydraulically upgradient wells to hydraulically downgradient wells. If known impacts exist, purging will take place from the least impacted well to the most impacted well. Prior to purge, the sample personnel will put on clean disposable nitrile gloves and an initial water level will be taken as described in Section 2.3.2.

Groundwater wells will be purged with dedicated bladder pumps. These pumps will remain dedicated to each respective well throughout monitoring unless replacement is necessary due to damage or wear, in which case repairs will be completed or a new pump will be dedicated. Purge procedures for dedicated equipment are described in Section 2.3.3.1. Pump intakes will be located as close as possible to the middle of the screened interval.

2.3.3.1 Dedicated Equipment

Low Flow Technique

Low-flow purging is the preferred purging and sampling technique and will be employed using dedicated bladder pumps if proper pump controller and field instruments are available to the sampling personnel. Well purging will be conducted at a rate of approximately 100 milliliters per minute until a minimum of two pump and tubing volumes have been removed and stabilization of field parameters is achieved. Field parameters include temperature, specific conductivity, pH, and turbidity.

Parameter stabilization is defined as:

- Temperature = ± 10% for three (3) consecutive measurements
- pH = ± 0.1 standard pH units for three (3) consecutive measurements
- Specific Conductivity = ± 3% for three (3) consecutive measurements
- Turbidity = ± 10% for three (3) consecutive measurements

Measurements will be recorded on the field data sheet every three to five minutes. Water level measurement will also be taken every three to five minutes and recorded on the field data sheet. An initial decrease in water level may be expected due to pump and tubing

evacuation, however, minimal subsequent continuous drawdown is to be expected. Should a well repeatedly not meet one or more criteria, alternate criteria may be implemented with UDEQ approval.

Fixed Volume Technique

If Low-Flow techniques are not used, wells will be purged a minimum of three (3) well casing volumes of water or until dryness if occurring prior to removal of three well casing volumes of water. Measurements of temperature, pH, conductivity, and turbidity will be recorded at intervals of approximately three (3) to five (5) minutes on a Field Data Sheet (see Appendix A) during purging.

A bladder pump will be used for both well purging and sample collection.

Equipment:

- Bladder pump
- Bladder pump controller
- Compressed air source
- New disposable gloves of appropriate material (nitrile)
- Graduated pail and/or cylinder
- Field parameter measurement device/s

Procedure:

- Appropriate disposable gloves are to be worn during installation.
- Connect the compressed air source to the pump fitting at the top of the well.
- Start the air compressor.
- Replace disposable gloves after handling the compressor.
- Turn on the pump controller and adjust the discharge and refill cycles to the appropriate settings.
- Press the start button on the controller, which begins the pumping action.
- Adjust the controller to the desired flow rate (approximately 100 milliliters per minute).

Continue pumping until the necessary volume of water has been purged from the well and field parameters have stabilized.

2.3.3.2 Non-Dedicated Equipment

In the event of a non-operative dedicated pump, the pump and tubing apparatus will be removed for repairs or replacement and the well will be purged by means of either a disposable bailer or a portable pump until such time the bladder pump is repaired/replaced and rededicated to the well. Purging will be performed by removing a minimum of three well-casing volumes of water from the well or until stabilization of field parameters (as defined in Section 2.3.3.1) occurs. Purging will be deemed complete if the well goes dry before three well-casing volumes of water have been removed. Field parameters will be measured after each well-casing volume of water removed.

Equipment:

- Non-dedicated pump/bailer
- Pump controller (if required)
- Generator or other power source/driving mechanism for pumps / appropriate disposable string or rope for bailer, downrigger (optional)
- New disposable tubing
- New disposable gloves of appropriate material (nitrile)
- Graduated pail or other appropriate container
- Field parameter measurement device(s)
- Container for laboratory grade, nonphosphate soap/reagent-grade deionized water solution
- Container for reagent-grade deionized water rinse

Procedure (Specific operating instructions vary depending on the type of portable pump used. The steps listed below are generalized procedures)

- Don a new pair of gloves.
- Cleanse portable pump/bailer with a non-phosphate, laboratory grade detergent solution followed by an reagent-grade deionized water rinse. Sufficient water should be passed through a non-dedicated pump to ensure proper cleansing.
- Remove gloves worn during cleaning and don a new pair of gloves.
- Attach new disposable tubing to pump or new disposable string to bailer.
- Insert pump and tubing/bailer into well.
- Start the portable pump by the appropriate method and adjust flow to desired rate / initiate removal of water from well with bailer. Ensure bailer and string do not touch ground during purging.

When purging with a bailer, introduce bailer into water column slowly (i.e. do not "drop" into water column) to avoid agitation of water in the well and immediate formation area.

Non-dedicated equipment will be constructed of chemically inert materials and will be decontaminated at each well with a non-phosphate detergent followed with a reagent-grade deionized water rinse. Additional cleaning procedures will be performed as deemed necessary.

Rate of discharge and volume purged will be checked periodically with a graduated bucket and/or timer. Field parameter (temperature, pH, specific conductivity, and turbidity) measurements will be recorded after each well volume of water is removed during purging.

2.3.4 Purge Water Management

If purge water is known to be historically contaminated or suspect due to prior analytical data, the water shall be stored in appropriate containers until analytical results are available. After review of these analyses, proper arrangements for disposal or treatment of the water shall be made. Otherwise, purge water will be discarded on the ground away from the monitor well area.

2.4 Monitoring Well Sample Collection

2.4.1 General Sample Collection Information

Sampling should take place as soon as purging is complete if the well has sufficient recharge. If the well was purged dry or significant drawdown of the water level exists immediately after purge, the monitor well should be sampled as soon as sufficient water is present for all analytes to be collected. The time interval between the completion of well purge and sample collection normally should not exceed forty-eight hours.

2.4.2 Sample Collection Order

Monitor well sampling at each event shall proceed from the point with the highest water level elevation to those with successively lower elevations unless contamination is known to be present. If contamination is known to be present, samples will be collected from the least to most contaminated wells, to minimize the potential for any cross-contamination. Samples will be collected and containerized according of the volatility of the requested analyses. A specific collection order is as follows:

- Field Parameters (Temperature, pH, Specific Conductivity, Turbidity)
- Volatile Organics
- Metals
- Inorganics

2.4.3 Sampling Equipment/Procedures

Groundwater wells will be sampled using dedicated bladder pumps. These are the same pumps used for well purging.

2.4.4 VOC Sample Collection

Filling VOC sample containers involves extra care. The water should be gently added to each vial until a positive meniscus is formed over the top of the container. This insures no headspace is present in the sample vial upon replacing the cap. After the cap has been placed on the vial and tightened, the vial should be checked for air bubbles by turning upside down and tapping with finger. If a bubble is seen rising to the top of the inverted vial, the process outlined above should be repeated. If no air bubbles are seen in each vial, the process is complete.

2.4.5 Sample Filtration

All efforts must be made to delete or minimize controllable factors to allow the collection of as representative and turbid-free sample as possible. Utah DEQ, UAC, Solid Waste Permitting and Management Rules does not currently allow for field sample filtration of constituents listed in R315-308-4 prior to laboratory analysis (R315-308-2 (4)(d)). The facility may collect samples for laboratory filtration and analysis of dissolved metals when deemed necessary. Otherwise, metal and inorganic indicator analyses will be for total concentrations.

2.4.6 Sample Preservation

All samples will be containerized and preserved according to Appendix B, *Recommended Containerization and Preservation of Samples.* In the goal to obtain the most representative sample possible, preserving the sample for transportation and storage to the laboratory is also important.

Methods of preservation are intended to retard biological action, retard hydrolysis of chemical compounds and complexes, and reduce the volatility of constituents. Samples

requiring refrigeration to four degrees Centigrade will be accomplished by placing the sample containers immediately into coolers containing wet ice and delivering to the analytical laboratory as soon as possible.

2.4.7 Field Measurements

Required field measurements include water levels, temperature, pH, specific conductivity, and turbidity. Each of these measurements is important in the documentation of properly collected groundwater samples.

All instruments shall be properly calibrated and checked with standards according to the manufacturer's instructions and/or the field crew's standard operating procedures. Any improper operating instruments must be replaced prior to continuing sample collection operations.

2.5 Record Keeping

2.5.1 Field Logs

All field notes must be completely and accurately documented to become part of the final report for a monitoring event. All field information will be entered on a Field Data Sheet (see Appendix A) or equivalent form.

All entries shall be legible and made in indelible ink. Entry errors will be crossed out with a single line, dated, and initialed by the person making the corrections.

2.5.2 Chain-of-Custody

Proper chain of custody records are required to insure the integrity of the samples and the conditions of the samples upon receipt at the laboratory, including the temperature of the samples at the time of log in. The sample collector shall fill in all applicable sections and forward the original, with the respective sample(s), to the laboratory performing the analysis. Upon receipt of the samples at the laboratory, the sample coordinator is to complete the chain of custody, make a copy for his/her files, and make the original documents part of the final analytical report (see example provided as Appendix D). All sample containers will be labeled to prevent misidentification. The following will be indicated on an adhesive label with a waterproof pen:

- Collector's name, date and time of sampling
- Sample source
- Sample identification number

- Sample preservatives
- Test(s) to be performed on the sample

Sample shuttle kits (coolers) will employ a tamper proof seal.

2.6 Sample Transport

Samples shall be shipped from the field back to the analytical laboratory either by hand delivery or utilizing an overnight courier service. Samples are to be shipped in sealed insulated shipping containers. Standard shipping containers must be a sturdy waterproof design (ice chests are commonly used) equipped with bottle dividers and cushion material to prevent breakage during shipment. Since wet ice is the most common means by which to refrigerate the samples, appropriate measures need to be taken to fully waterproof the contents from leakage. The field crew shall contact the laboratory each time samples are sent to identify the samples being sent and the transportation carrier along with the shipping identification number.

The laboratory shall provide a notification concerning the receipt of the groundwater samples as soon as practical after they have been received. The notification will include the date, temperature, and condition of sample bottles received.

3 LABORATORY PROCEDURES/ PERFORMANCE STANDARDS

3.1 Analytical Methods

Chemical analyses will be performed by a laboratory that is certified by the State of Utah to analyze each Table 1 constituent. Methods and reporting limits will conform to Table 1 and will be performed in accordance with test procedures presented in USEPA *Test Methods for Evaluating Solid Waste, Physical/Chemical Methods*, SW-846, September 1986 and any subsequent revisions or additions.

Alternative methods that provide equivalent or better performance than those listed in EPA publication SW-846 and analytical methods for constituents not listed in EPA publication SW-846 may be implemented with the approval of the Executive Secretary.

3.2 Deliverables (General and Supplemental QA/QC)

3.2.1 General Requirements

For general reporting of quantitative results for Subtitle D groundwater monitoring projects, the following reporting requirements apply:

- Methodology Summary - reporting of all the analytical test methods used in the analyses of the samples with a reference made for each to the method manual and the test method number to confirm compliance with Table 1.
- Summary of the analytical results, indicating appropriate unit, and reporting RL: and supervisor approval – concentration units must be consistently applied throughout report. Data cannot be method blank corrected. It must be appropriately flagged.
- Chain-of-Custody Form – As per Section 2.5.2.
- Field Data Sheets (see Appendix A) or equivalent form.

3.2.2 Supplemental QA/QC Reporting Requirements

- Laboratory Chronicles – must include date of sampling, sample receipt, preservation, preparation, analysis, and supervisor approval signature.

- Non-Conformance Summary for GC/MS Data Reports – must state if the following do not meet QA/QC requirements:

  GC/MS Tune Specifications
  GC/MS Tune Frequency
  Calibration Frequency
  Calibration Requirements – System Performance Check
  Compounds, Calibration Check Compounds
  Blank Contamination
  Surrogate Recoveries
  Sample Holding Times
  Minimum Detection Limits

3.2.3 Requirements for Organics: Volatiles

1. Quality Assurance (QA) Data Form – must include minimum detection limits, method blanks, field/trip blanks if specified in Sampling Plan, lab replicate. Quality Control (QC) samples may be other than project samples, but must be of same batch and similar matrix. A single QA Data Form should be used for a number of samples; however, pertinent sample numbers must be listed on the form.

2. Surrogate Compound Recovery Summary – for samples and blanks – as per most recent version of applicable SW-846 method 8260.

3. Other requirements per Laboratory Quality Assurance Plan and regulatory requirements.

3.2.4 Laboratory Requirements for Metals

At a minimum, method detection limits must be established and method blank results are mandatory.

3.2.5 Requirements for Inorganic - General Chemistry

Quality Assurance (QA) Data Form - must include minimum detection limits, method blanks, field/trip blanks as specified in Sampling Plan, lab replicate. Quality Control

(QC) samples may be other than project samples, but must be of same batch and similar matrix.

A single QA Data Form should be used for a number of samples; however, pertinent sample numbers must be listed on the form. In addition, spiked sample results must be included.

3.3 Data Quality Objectives

3.3.1 Required Reporting Limits

Data reported must be such that the method used shall achieve the nominal reporting limits (RLs) listed in Table 1 - Background/Detection Monitoring Parameters

3.3.2 Precision

Precision refers to the reproducibility of method results when a second aliquot of the same sample undergoes duplicate analysis. The degree of agreement is expressed as the Relative Percent Difference (RPD). Precision requirements shall be as per applicable method and laboratory standards.

3.3.3 Accuracy

Accuracy refers to the agreement between the amount of a constituent measured by a test method and the amount actually known to be present. Accuracy is usually expressed as a percent Recovery (R). Accuracy shall be as per applicable method and laboratory standards.

4 SAMPLING FREQUENCY AND REPORTING REQUIREMENTS

4.1 Background

As per UAC R315-308-2 (4)(a), a minimum of eight (8) independent samples will be collected and analyzed to establish background for the constituents listed in Table 1 to establish background concentrations. Each monitor well in the site groundwater monitoring program will be defined as background or detection.

4.2 Detection Monitoring Events

After establishment of background values, sampling and analysis for both upgradient and downgradient detection monitoring wells will be conducted on a semi-annual basis (every six (6) months) for constituents listed in Table 1.

4.3 Groundwater Analysis Result Submittals

Two (2) bound copies of a report of all groundwater sampling and analysis results will be submitted to the Executive Secretary. The report will be submitted in standard laboratory format and on any applicable state agency reporting forms. Within a reasonable period of time after completing sampling, the owner/operator must determine whether there has been a statistically significant increase (SSI) over background at each monitoring well as per UAC R315-308-2 (4) (f) (v).

If there has been a statistically significant increase over background of any tested constituent at any monitoring well, a notice in writing to the UDEQ will be submitted within fourteen (14) days after the finding.

5 STATISTICAL METHODOLOGY - GROUND WATER DATA ANALYSIS

Statistical comparisons will be performed using Sanitas™, a commercial software program developed by Intelligent Decision Technologies, Inc. or another comparable computer program. Statistical analyses of groundwater data will be performed in accordance with UAC R315-308-2 (7). A statistical analysis plan has been prepared and included as Appendix E. Appendix E Statistical Analysis Plan has been prepared using generally accepted statistical analysis principals and practices (IDT, 2002). However, it is not possible to predict all of the potential future circumstances. Therefore, alternative methods may be used that are more appropriate for the data distribution of the constituents being evaluated.

5.1 Statistically Significant Constituents and Verification Resampling

Statistical analysis of constituents in Table 1 will commence within six (6) months after completion of eight (8) quarterly background events for a particular well. An initial Statistically Significant Increase (SSI) will be based on any compound detected in any downgradient monitor well at a concentration above the specific constituent's statistical limit. If an initial SSI of any constituent is indicated at any downgradient monitoring well, a notice will be made to the Department in the form of a statistical analysis report as referenced in Section 4.3 of this plan.

Verification resampling is an integral part of the presented statistical methodology. In the event of an initial SSI, verification resampling may be conducted and the results provided to the Executive Secretary in accordance with UAC R315-308-2 (10) (b).

As per UAC R315-308-2 (10) (c), the owner/operator may demonstrate, to the satisfaction of the Executive Secretary, within 90 days of the finding that the SSI is the result of a source other than the Municipal Solid Waste Landfill (MSWLF), such as error in sampling, analysis, statistical evaluation, or natural variation in groundwater quality. Otherwise, the owner/operator must initiate an assessment monitoring program under UAC R315-308-2 (11).

6 REFERENCES

American Society of Testing and Materials (ASTM), 1986. *Standard Guide for Sampling Groundwater Monitoring Wells.* D 4448 - 850.

Intelligent Decision Technologies (IDT), 2002. Sanitas For Groundwater User's Guide. Longmont, Colorado.

Gibbons, Robert, D. 1994. Statistical Methods for Groundwater Monitoring, John Wiley & Sons, Inc. New York.

Gibbons, Robert, D. and Coleman, David, E. 2001. Statistical Methods for Detection and Quantification of Environmental Contamination. John Wiley and Sons. New York. 384 p.

Gilbert, R. O. 1987. Statistical Methods for Environmental Pollution Monitoring. Van Nostrand Reinhold, New York.

Martin, W.F., Lippitt, J.M., and Protherd, T.G. 1987. *Hazardous Waste Handbook For Health and Safety,* Butterworth Publishers, Stoneham, Massachusetts, pp. 28 - 30.

State of Utah, Utah Administrative Code, Solid Waste Permitting and Management Rules R315-301 through 320, Department of Environmental Quality, Revised June 15, 2000.

U.S. Environmental Protection Agency, 1986. *RCRA Groundwater Monitoring Technical Enforcement Guidance Document.* OSWER - 99550.1, Office of Waste Programs Enforcement, Office of Solid Waste and Emergency Response, Washington, D.C.

U.S. Environmental Protection Agency, 1989. Statistical Analysis of Groundwater Monitoring Data at RCRA Facilities, Interim Final Guidance. Office of Solid Waste Management Division, U.S. Environmental Protection Agency, Washington D.C.

U.S. Environmental Protection Agency, 1992. Statistical Analysis of Groundwater Monitoring Data at RCRA Facilities, Addendum to Interim Final Guidance.

Office of Solid Waste Management Division, U.S. Environmental Protection Agency, Washington D.C.

U.S. Environmental Protection Agency, 1992. *RCRA Groundwater Monitoring: Draft Technical Guidance.* EPA/530-R-93-001, NTIC # PB93-139-350, Office of Solid Waste and Emergency Response, Washington, D.C.

U.S. Environmental Protection Agency, 1991b. *Handbook - Groundwater, Volume II: Methodology.* EPA/625/6-90/0166.

U.S. Environmental Protection Agency, November 1986. *Test Methods for Evaluating Solid Waste - Physical/Chemical Methods, Third Edition (Revised),* SW-846. Office of Solid Waste and Emergency Response, Washington, D.C.

U.S. Environmental Protection Agency, November 1993. *Solid Waste Disposal Facility Criteria Technical Manual.* EPA/530-R-93-017, NTIC #PB94-100-450, Office of Solid Waste and Emergency Response, Washington, D.C.

U.S. Environmental Protection Agency, Federal Register, 40 CFR 258, October 9, 1991.

TABLES

Table 1
List of Analytical Parameters
Washington County Landfill

Inorganic Constituents	CAS	Method[1]	RL[2] (mg/L)
Ammonia as Nitrogen	7664-41-7	350.1	1
Carbonate/Bicarbonate		310.1	10
Calcium		6010 or 6020	0.6
Chemical Oxygen Demand (COD)		410.2	10
Chloride		300.0	10
Iron	7439-89-6	6010 or 6020	0.1
Magnesium		6010 or 6020	0.2
Manganese	7439-96-5	6010 or 6020	0.015
Nitrate as Nitrogen		300.0 or 353.2	5
pH		150.1	N/A
Potassium		6010 or 6020	5
Sodium		6010 or 6020	5
Sulfate		300.0 or 375.4	10
Total Dissolved Solids (TDS)		160.1	10
Total Organic Carbon (TOC)		415.1	2
Heavy Metals	**CAS**	**Method[1]**	**RL[2] (mg/L)**
Antimony	7440-36-0	6010 or 6020 or 200.8	0.005
Arsenic	7440-38-2	7041 or 6020	0.04
Barium	7440-39-3	6010 or 6020	0.02
Beryllium	7440-41-7	7091 or 6020	0.002
Cadmium	7440-43-9	6010 or 6020	0.001
Chromium		6010 or 6020	0.05
Cobalt	7440-48-4	6010 or 6020	0.07
Copper	7440-50-8	6010 or 6020	0.05
Lead		7421 or 6020 or 200.8	0.01
Mercury	7439-97-6	6020 or 7470	0.001
Nickel	7440-02-0	6010 or 6020	0.01
Selenium	7782-49-2	7740 or 6010 or 6020	0.02
Silver	7440-22-4	6010 or 6020	0.07
Thallium		7841 or 6020 or 200.8	0.002

Table 1 (Continued)

Heavy Metals	CAS	Method[1]	RL[2] (mg/L)
Vanadium	7440-62-2	6010 or 7911	0.02
Zinc	7440-66-6	6010 or 6020	0.01

Volatile Organic Compounds	CAS	Method[1]	RL[2] (µg/L)
Acetone	67-64-1	8260B	10
Acrylonitrile	107-13-1	8260B	50
Benzene	71-43-2	8260B	4
Bromochloromethane	74-97-5	8260B	4
Bromodichloromethane	75-27-4	8260B	4
Bromoform (tribromomethane)	75-25-2	8260B	4
Carbon disulfide	75-15-0	8260B	4
Carbon tetrachloride	56-23-5	8260B	4
Chlorobenzene	108-90-7	8260B	4
Chloroethane (ethyl chloride)	75-00-3	8260B	8
Chloroform (trichloromethane)	67-66-3	8260B	4
Dibromochloromethane (Chlorodibromomethane)	124-48-1	8260B	4
1,2-Dibromo-3-chloropropane (DBCP)	96-12-8	8260B	0.2
1,2-Dibromoethane (ethylene dibromide, EDB)	106-93-4	8260B	0.05
o-Dichlorobenzene (1,2-dichlorobenzene)	95-50-1	8260B	4
p-Dichlorobenzene (1,4 dichlorobenzene)	106-46-7	8260B	4
trans-1,4-Dichloro-2-butene	110-57-6	8260B	4
1,1-Dichloroethane (ethylidene chloride)	75-34-3	8260B	4
1,2-Dichloroethane (ethylene dichloride)	107-06-2	8260B	4
1,1-Dichloroethylene (1,1-dichloroethene)	75-35-4	8260B	4
cis-1,2-Dichloroethylene (1,1-dichloroethene)	156-59-2	8260B	4
trans-1,2-Dichloroethylene (trans-1,2-dichloroethene)	156-60-5	8260B	4
1,2-Dichloropropane (propylene dichloride)	78-87-5	8260B	4
cis-1,3-dichloropropene	10061-01-5	8260B	2
trans-1,3-dichloropropene	10061-02-6	8260B	2

Table 1 (Continued)

Heavy Metals	CAS	Method[1]	RL[2] (mg/L)
Vanadium	7440-62-2	6010 or 7911	0.02
Zinc	7440-66-6	6010 or 6020	0.01

Volatile Organic Compounds	CAS	Method[1]	RL[2] (µg/L)
Acetone	67-64-1	8260B	10
Acrylonitrile	107-13-1	8260B	50
Benzene	71-43-2	8260B	4
Bromochloromethane	74-97-5	8260B	4
Bromodichloromethane	75-27-4	8260B	4
Bromoform (tribromomethane)	75-25-2	8260B	4
Carbon disulfide	75-15-0	8260B	4
Carbon tetrachloride	56-23-5	8260B	4
Chlorobenzene	108-90-7	8260B	4
Chloroethane (ethyl chloride)	75-00-3	8260B	8
Chloroform (trichloromethane)	67-66-3	8260B	4
Dibromochloromethane (Chlorodibromomethane)	124-48-1	8260B	4
1,2-Dibromo-3-chloropropane (DBCP)	96-12-8	8011	0.2
1,2-Dibromoethane (ethylene dibromide, EDB)	106-93-4	8011	0.05
o-Dichlorobenzene (1,2-dichlorobenzene)	95-50-1	8260B	4
p-Dichlorobenzene (1,4 dichlorobenzene)	106-46-7	8260B	4
trans-1,4-Dichloro-2-butene	110-57-6	8260B	4
1,1-Dichloroethane (ethylidene chloride)	75-34-3	8260B	4
1,2-Dichloroethane (ethylene dichloride)	107-06-2	8260B	4
1,1-Dichloroethylene (1,1-dichloroethene)	75-35-4	8260B	4
cis-1,2-Dichloroethylene (1,1-dichloroethene)	156-59-2	8260B	4
trans-1,2-Dichloroethylene (trans-1,2-dichloroethene)	156-60-5	8260B	4
1,2-Dichloropropane (propylene dichloride)	78-87-5	8260B	4
cis-1,3-dichloropropene	10061-01-5	8260B	2
trans-1,3-dichloropropene	10060-02-6	8260B	2

1

10061-02-6

Table 1 (Continued)

Volatile Organic Compounds	CAS	Method[1]	RL[2](µg/L)
Ethylbenzene	100-41-4	8260B	4
2-Hexanone (methyl butyl ketone)	591-78-6	8260B	5
Methyl bromide (bromomethane)	74-83-9	8260B	5
Methyl chloride (chloromethane)	74-87-3	8260B	2
Methylene bromide (dibromomethane)	74-95-3	8260B	4
Methylene chloride (dichloromethane)	75-09-2	8260B	4
Methyl ethyl ketone (MEK, 2-butanone)	78-93-3	8260B	5
Methyl iodide (iodomethane)	74-88-4	8260B	4
4-Methyl-2-pentanone (methyl isobutyl ketone)	108-10-1	8260B	5
Styrene	100-42-5	8260B	4
1,1,1,2-Tetrachloroethane	630-20-6	8260B	4
1,1,2,2-Tetrachloroethane	79-34-5	8260B	4
Tetrachloroethylene (tetrachloroethene)	127-18-4	8260B	4
Toluene	108-88-3	8260B	4
1,1,1-Trichloroethane (methylchloroform)	71-55-6	8260B	4
1,1,2-Trichloroethane	79-00-5	8260B	4
Trichloroethylene (trichloroethene)	79-01-6	8260B	4
Trichlorofluoromethane (CFC-11)	75-69-4	8260B	4
1,2,3-Trichloropropane	96-18-4	8260B	4
Vinyl acetate	108-05-4	8260B	5
Vinyl chloride	75-01-4	8260B	2
Xylenes (total)	1330-20-7	8260B	4

1. Equivalent or better methods may be submitted as appropriate
2. Reporting Limits

For the compounds DBCP and EDB, any detectable amount between the RL and MCL will be estimated and flagged with an appropriate symbol.

APPENDIX A

Washington County Landfill

GROUNDWATER SAMPLING FIELD DATA SHEET

Well Number: _____

Sample I.D.: _____ (if different from well no.)

Project: _____

Personnel: _____

Date: _____

Weather: _____ Air Temp: _____

WELL DATA:

Casing Diameter: _____ (in) ☐ PVC ☐ Other:

DEPTH TO: Static Water Level (WL): _____ (ft) Total Depth (TD): _____ (ft)

DATUM: ☐ Top of Well Casing ☐ Top of Protective Casing

CONDITION: Is well clearly labeled? ☐ Yes ☐ No

Is prot. casing in good cond.? (not bent or corroded) ☐ Yes ☐ No

Is concrete pad intact? (not cracked or frost heaved) ☐ Yes ☐ No

Is padlock functional? ☐ Yes ☐No Is inner casing intact? ☐ Yes ☐ No

Is inner casing properly capped and vented? ☐ Yes ☐ No

Comments: _____

PURGE DATA:

One Casing Volume = (d/24)2 (23.5)(TD-WL)

METHOD: ☐ Bladder Pump ☐ Bailer ☐ Other: _____ Low-Flow Purging Used? ☐Yes ☐ No

MATERIALS: Type of Pump: _____

Tubing: ☐Teflon® ☐ Polyethylene ☐ Polypropylene ☐ Other: _____

PURGING EQUIPMENT: ☐ Dedicated ☐ Prepared Off-Site ☐ Field-Cleaned

PROCEDURES: Pump & Tubing Vol.: _____(ml) Pumping Rate: _____ (ml/min)

CALIBRATION: pH Meter Model: _____ Meter S/N: _____ Time: _____

Cond. Meter Model: _____ Meter S/N: _____ Time: _____

Disposition of Purge Water: _____

TIME SERIES DATA:

Time:							
Cum. Volume(ml)							
Temperature (®C)							
pH (s.u.):							
Spec. Cond. (µmhos/cm):							
Turbidity (NTU):							
Other							

SAMPLING DATA:

Sample Collection Time: _____

Water Level at Time of Sample: _____

METHOD: ☐ Bladder Pump ☐ Bailer ☐ Other: _____

SAMPLING EQUIPMENT: ☐ Dedicated ☐ Prepared Off-Site ☐Field-Cleaned

APPEARANCE: ☐ Clear Turbid (NTU): _____ Color: _____ ☐ Contains Immiscible Liquid

FIELD DETERMINATIONS: Temp. (°C): _____ pH (s.u.): _____ Spec. Cond. (µmhos/cm): _____

General Remarks: _____

I certify that this sample was collected and handled in accordance with applicable regulatory and project protocols.

Signature: _____ Date: _____

APPENDIX B

RECOMMENDED CONTAINERIZATION AND PRESERVATION OF SAMPLES

Measurement	Volume (mL)	Container[a]	Preservative	Holding Times	Reference
Physical Properties					
Specific Cond. (Field)	100	P,G	None	Det. on Site	1
Specific Cond. (Lab)	100	P,G	Cool, 4 °C	28 Days	1
pH (Field)	50	P,G	None	Det. on Site	1,2
pH (Lab)	50	P,G	None	24 Hrs	1,2
Temperature	1000	P,G	None	Det. On Site	1
Turbidity	100	P,G	None	Det. On Site	1

Measurement	Volume (mL)	Container[a]	Preservative	Holding Times	Reference
Inorganics, Non-Metallics					
Ammonia as Nitrogen	1000	P,G	Cool, 4 °C H_2SO_4 to pH <2	28 days	2,3
Carbonate/Bicarbonate	200	P,G	Cool, 4 °C	14 days	1
Chemical Oxygen Demand (COD)	50	P,G	H_2SO_4 to pH <2	28 days	1
Chloride	200	P,G	None	28 Days	1,2
Nitrate plus Nitrite	200	P,G	Cool, 4 °C H_2SO_4 to pH <2	28 days	1,2
Sulfate	100	P,G	Cool, 4 °C	28 days	1,2
Total Dissolved Solids (TDS)	500	P,G	Cool, 4 °C	7 days	2,3
Total Organic Carbon (TOC)	250	P,G	Cool, 4 °C HCL or H_2SO_4 to pH <2	28 days	2,3

RECOMMENDED CONTAINERIZATION AND PRESERVATION OF SAMPLES

Measurement	Volume (mL)	Container[a]	Preservative	Holding Times	Reference
Metals (except mercury)					
Total	500	P,G	HNO_3 to pH <2	6 Mos	1,2
Dissolved	500	P,G	Filt. + HNO_3 to pH <2	6 Mos	1,2
Mercury – Total	500	P,G	HNO_3 to pH <2	28 days	1,2
Mercury – Dissolved	300	P,G	Filt. + HNO_3 to pH <2	28 days	1,2

Measurement	Volume (mL)	Container[a]	Preservative	Holding Times	Reference
Organics					
Volatile Organics by GC/MS	100 (2 vials @ 40ml)	G, Teflon septum cap	Cool, 4 °C HCL to pH <2	14 days	2,3
Herbicides	1000	Glass Only	Cool, 4 °C	7 days[b] 40 days[c]	2,3
Pesticides and PCB's	1000	Glass Only	Cool, 4 °C	7 days[b] 40 days[c]	2,3
Semi-Volatiles Acid and Base/Neutral Compounds	2000	Glass Only	Cool, 4 °C	7 days[b] 40 days[c]	2,3

NOTES:

a Plastic (P) or Glass (G). For metals, polyethylene with an all polypropylene cap is preferred.

b Maximum holding time from sampling to extraction.

c Maximum holding time from extraction to analysis.

REFERENCES:

1 Methods for Chemical Analysis of Water and Wastes. March, 1983, USEPA, 600/4-79-020 and additions thereto.

2 Test Methods for Evaluating Solid Waste, Physical/Chemical Method. November, 1986, Third Edition, USEPA, SW-846 and additions thereto.

3 "Guidelines Establishing Test Procedures for the Analysis of Pollutant Under the Clean Water Act", Environmental Protection Agency, Code of Federal Regulations (CFR), Title 40, Part 136.

APPENDIX C

Calibration Data Sheet

Project:_____
Calibrated By:_____
Date:_____ **Time:**_____

Calibration Solution Temperature:_____ C

pH Meter
Model _____
Serial Number _____
Calibration Solution _____
Instrument Reading _____
Known pH _____

Conductivity Meter
Model _____
Serial Number _____
Calibration Solution _____
Instrument Reading _____
Known Conductance _____

Turbidity Meter
Model _____
Serial Number _____
Calibration Solution _____
Instrument Reading _____
Known Turbidity _____

Date:_____ **Time:**_____

Calibration Solution Temperature:_____ C

pH Meter
Model _____
Serial Number _____
Calibration Solution _____
Instrument Reading _____
Known pH _____

Conductivity Meter
Model _____
Serial Number _____
Calibration Solution _____
Instrument Reading _____
Known Conductance _____

Turbidity Meter
Model _____
Serial Number _____
Calibration Solution _____
Instrument Reading _____
Known Turbidity _____

Comments:_____
_____

APPENDIX D

ıain of
ıstody Record

SEVERN TRENT **STL**

Severn Trent Laboratories, Inc.

1124 (0901)

·nt	Project Manager	Date	Chain of Custody Number 165409
·ress	Telephone Number (Area Code)/Fax Number	Lab Number	Page _____ of _____
State	Zip Code	Site Contact	Lab Contact
·ject Name and Location (State)	Carrier/Waybill Number		
·ntract/Purchase Order/Quote No.			

Analysis (Attach list if more space is needed)

Special Instructions/ Conditions of Receipt

Sample I.D. No. and Description (ıntainers for each sample may be combined on one line)	Date	Time	Matrix: Air	Aqueous	Sed.	Soil	Containers & Preservatives: Unpres.	H2SO4	HNO3	HCl	NaOH	ZnAc/ NaOH

SAMPLE

ssible Hazard Identification

☐ Non-Hazard ☐ Flammable ☐ Skin Irritant ☐ Poison B ☐ Unknown

Sample Disposal

☐ Return To Client ☐ Disposal By Lab ☐ Archive For _____ Months (A fee may be assessed if samples are retained longer than 1 month)

·rn Around Time Required

☐ 24 Hours ☐ 48 Hours ☐ 7 Days ☐ 14 Days ☐ 21 Days ☐ Other_____

QC Requirements (Specify)

Relinquished By	Date	Time	Received By	Date	Time
			1. Received By		
Relinquished By			2. Received By		
Relinquished By			3. Received By		

ɔmments

APPENDIX E

CONTENTS

1	**INTRODUCTION**	1
2	**DETECTION MONITORING STATISTICAL ANALYSES**	2
	2.1 Metals and Inorganic Indicator Constituents	2
	2.2 Statistical Evaluation of Volatile Organic Compounds	6
	2.3 Verification Resampling	6
3	**ASSESSMENT MONITORING STATISTICAL ANALYSIS**	7
	3.1 Assumptions	7
	3.2 Distribution	8
	3.3 Censored Data	8
	3.4 Parametric Confidence Limit Procedures	8
	3.5 Nonparametric Confidence Limit Procedure	9
4	**REFERENCES**	10

FIGURES

E-1 – Shewart-CUSUM Control Chart Flow Chart
E-2 – Non-Parametric Prediction Limit Flow Chart
E-3 – 95 Percent Confidence Interval Flow Chart

1 INTRODUCTION

This document provides a statistical methodology for groundwater monitoring at the Washington County Landfill. A tiered evaluation approach has been developed for detection monitoring wells. Intrawell comparisons of metals and inorganic indicator parameters will be conducted using Shewhart-CUSUM control charts. Non-parametric prediction limits combined with Sen's Slope/MannKendall trend analysis will be applied to those parameters with greater than 50 percent non-detections (25 percent under ASTM standards) in the background data set. Statistical limits for volatile organic compounds in detection monitoring wells will be based on reporting limits (RLs). Assessment monitoring constituents will be statistically evaluated using detection monitoring statisticis and 95 percent confidence interval analysis. Details of each method are provided in the following sections. Statistical comparisons will be performed using Sanitas™, a commercial software program developed by Intelligent Decision Technologies, Inc. or another comparable computer program.

This document has been prepared using generally accepted statistical analysis principals and practices. However, it is not possible to predict all of the potential future circumstances. Therefore, alternative methods may be used that are more appropriate for the data distribution of the constituents being evaluated.

2 DETECTION MONITORING STATISTICAL ANALYSES

2.1 Metals and Inorganic Indicator Constituents

2.1.1 Shewhart-CUSUM Control Charts

Metals and inorganic indicator constituents will be statistically evaluated using combined Shewhart-CUSUM Control Charts. This procedure assumes that the data are independent and normally distributed with a fixed mean and constant variance. The most important assumption is independence, therefore wells should be sampled no more frequently than quarterly (Gibbons, 1994). The assumption of normality is less of a concern and natural log or ladder of powers transformations are adequate for most applications. The analysis is only applied to constituents that have greater than 50 percent detections (25 percent under ASTM standards) in the background data. For those metals and inorganic indicator constituents with fewer than 50 percent detections in the background data set, a non-parametric prediction limit/Sen's Slope/Mann Kendall trend analysis will be used.

Shewhart-CUSUM control charts allow detection of both major and gradual releases from the facility independent of spatial variation. This procedure is specifically recommended in the USEPA document *Statistical Analysis of Ground-Water Monitoring Data at RCRA Facilities* (April 1989).

2.1.2 Procedure

Control charts are a form of time-series graph, on which a parametric statistical representation of concentrations of a given constituent are plotted at intervals over time. The statistics are computed and plotted together with an upper and/or lower control limit on a chart where the x-axis represents time.

The Procedure for conducting the intrawell analysis using combined Shewhart-CUSUM Control Charts is provided below and a flow chart illustrating the decision making process is provided as Figure E-1.

Three parameters are selected prior to plotting:

h - The control limit to which the cumulative sum (CUSUM) values are compared. The EPA recommended value for **h** is 5 units of standard deviation.

k - A reference value that establishes the upper limit for the acceptable displacement of the standardized mean. The EPA recommended value for k is 1.

SCL - The upper Shewhart control limit to which the standardized mean will be compared. The EPA recommended value for **SCL** is 4.5.

For each time period, T_i, take n_i independent samples (n_i may be one), and calculate the mean, $\bar{x}_i$. Compute the standardized mean Z_i of the measured concentrations where only a single new measurement is obtained for each constituent at each event as :

$$Z_i = \left(X_i - \overline{X}\right)\sqrt{n_i} / S$$

Where:

x_i = value obtained for a constituent during monitoring event i.

s = The standard deviation obtained from prior monitoring data from the same well.

When applicable, for each time period, T_i, compute the cumulative sum, S_i, as:

$$S_i = \max\{0, (Z_i - k) + S_{i-1}\}$$

Where max {A,B} is the maximum of A and B, and $S_o = 0$.

Plot Z_i and S_i against Ti on the control chart. The results may be plotted in standardized units or converted to the concentration units of the constituents being evaluated. An "out-of-control" situation (potential contamination) occurs whenever $Z_i \geq$ SCL or $S_i \geq$ h. Two different types of situation are controlled by the limits. Too large a standardized mean will occur if there is a rapid increase in concentration in the well. Too large a cumulative sum may also occur for a more gradual trend. A verified statistically significant change (SSC) will occur if both the initial result *and* a verification sample result consecutively exceed one of the above mentioned statistical limits. Upgradient wells will be monitored for informational purposes only and will not be part of the verification resampling program.

2.1.2.1 Verification Resamples

The Shewhart and CUSUM portions of the control chart are affected differently by initial statistically significant changes from background (SSCs). The Shewhart portion of the

control chart compares each individual new measurement to the control limit, therefore the next monitoring event constitutes an independent verification of the original result. However, the CUSUM procedure incorporates all historical values in the computation, therefore, the effect of the apparent SSC will be present in both the initial and verification sample. Hence, the statistical test will be invalid unless the verification sample value replaces the initial SSC value. Therefore, initial SSC values will be replaced by verification resample results in order to confirm a SSC (Gibbons, 1994).

2.1.2.2 Updating Control Charts

As monitoring continues, the background mean and variance will be updated periodically to incorporate new data. At a minimum of every two years all new data that are in control will be pooled with the initial eight background samples and the mean and variance will be recomputed and used in constructing future control charts. UDEQ (Utah Department of Environmental Quality) approval will be obtained prior to updating the background data pool.

2.1.2.3 Censored Data

If less than 15 percent of the background observations are nondetects, these will be replaced with one half of the laboratory reporting limit prior to running the analysis (U.S. EPA, April 1989).

If more than 15 percent but less than 50 percent of the background data are less than the detection limit, the data's sample mean and sample standard deviation are adjusted according to the method of Cohen or Aitchison.

If more than 50 percent of the background data are less than the detection limit, a nonparametric prediction limit will be computed.

2.1.3 Non-Parametric Prediction Limits and Sen's Slope/Mann Kendall Trend Analysis

For those metals and inorganic indicator constituents with fewer than 50-percent detections within the background pool, a combined non-parametric upper prediction limit/Sen's Slope/MannKendall trend ananlysis will be applied. Parameters will be initially tested using the non-parametric prediction limit analysis. Constituents exceeding the non-parametric prediction limit will then be tested using the Sen's Slope/Mann Kendall trend analysis. An initial statistical exceedence will be indicated if the measured concentration exceeds both the non-parametric prediction limit and exhibitis a significant upward trend. The combined methods provide a non-parametric control chart equivalent to allow detection of both major and gradual releases from the facility independent of spatial variation.

2.1.3.1 Non-Parametric Prediction Limit Analysis

An upper prediction limit is a statistical limit calculated to include one or more observations from the same population with a specified confidence. In groundwater monitoring, an upper prediction limit approach may be used to make comparisons between background and compliance well data. The limit is constructed to contain all **k** observations with stated confidence. Any observation exceeding the upper prediction limit provides statistically significant evidence that the observation is not representative of the background group. The number of observations, **k**, to be compared to the limit must be specified in advance. A flow chart illustrating the decision making process during the analysis is provided as Figure E-2.

The highest value from the background data is used to set the upper prediction limit. In the case of a two-tailed test, the lowest value from the background data is used to set the lower prediction limit. Under EPA Standards, the false positive rate is based upon the formula:

$$1-(n/(n+k))$$

Where:

n = The background sample size, and

k = The number of future values being compared to the limit.

2.1.3.2 Sen's Slope/Mann Kendall Trend Analysis

The Sen's Slope/Mann Kendall trend analysis procedure determines the significance of an apparent trend and evaluates the magnitude (slope) of that trend (IDT, 2002). The Mann Kendall test for temporal trend is a non-parametric procedure designed to test the null hypothesis, H_0:

H_0: No significant trend of a constituent exists over time.

And the alternative hypothesis, H_A:

H_A: A significant upward trend of a constituent concentration exists over time.

Wells for which less than 41 data points are available, the exact test is applied. For 41 or more data points, the Normal Approximation test is used.

The Sen's Slope estimator portion of the combined method provides an estimate of the true slope. The method is a non-parametric procedure not greatly affected by gross data errors or outliers, and can be computed when data are missing.

2.2 Statistical Evaluation of Volatile Organic Compounds

Volatile organic compounds (VOCs) will be routinely monitored during the detection monitoring program. The statistical limit for VOCs detected in wells under detection monitoring will be set equal to the laboratory reporting limit (RL). RLs are provided in Table 1 of the facility's Groundwater Sampling and Analysis Plan (GWSAP). As with the prediction limit statistical method, VOC detections will not be considered statistically significant unless confirmed by verification resampling. Verification resampling procedures are provided in Section 2.3 and in the GWSAP.

2.3 Verification Resampling

Results for constituents that exceed statistical limits will not be considered statistically significant unless they are confirmed through verification resampling.

If a statistically significant change (SSC) from background of any tested constituent at any monitor well has occurred (i.e. is confirmed) and there is reasonable cause that a source other than the landfill exists, then a report will be submitted documenting the source as per Section 5.1 of the GWSAP and UAC R315-308-2 (10)(c). Otherwise, assessment monitoring will be implemented in accordance with Section 5.1 of the GWSAP and UDEQ regulations.

3 ASSESSMENT MONITORING STATISTICAL ANALYSIS

For assessment wells, constituents exceeding detection monitoring statistical limits and that have a groundwater protection standard (GWPS) established by the USEPA or the UDEQ, and/or any VOC detections will be statistically compared to GWPS using one-sided 95-percent lower confidence limits (LCL). Evaluations are conducted per Gibbons and Coleman (2001). The method constructs a normal confidence interval on the mean concentration of a constituent incorporating, at a minimum, the four most recent semi-annual measurements. A separate interval is constructed for each constituent of interest in each well of interest. A confidence interval is generally used when downgradient samples are being compared to a GWPS. A flow chart depicting the decision making process during the analysis is provided as Figure E-3.

The lower 95-percent confidence limit on the mean will be compared to a GWPS to decide initially whether the mean concentration of a constituent of interest has exceeded a GWPS. If the lower 95-percent confidence limit on the mean exceeds the GWPS then there is statistically significant evidence that the mean concentration of that constituent exceeds the GWPS. Upper 95-percent confidence limit analyses may be applied to constituents in which it's 95 percent LCL has exceeded a GWPS. If the upper 95-percent confidence limit on the mean occurs lower that the GWPS then there is statistically significant evidence that the mean concentration of that constituent has returned to less than the GWPS.

3.1 Assumptions

The sample data used to construct the limits must be normally or transformed-normally distributed. In the case of a transformed-normal distribution, the confidence limit must be constructed on the transformed sample concentration values. In addition to the limit construction, the comparison must be made to the transformed GWPS value. When none of the transformed models can be justified, a nonparametric version of each limit may be utilized.

3.2 Distribution

The distribution of the data is evaluated by applying the Shapiro-Wilk or Shapiro-Francia test for normality to the raw data or, when applicable, to the Ladder of Powers (Helsel & Hirsch, 1992) transformed data. The null hypothesis, $\mathbf{H_O}$, to be tested is:

> $\mathbf{H_O}$: The population has a normal (or transformed-normal) distribution.

The alternative hypothesis, $\mathbf{H_A}$, is:

> $\mathbf{H_A}$: The population does not have a normal (or transformed-normal) distribution.

3.3 Censored Data

If less than 15 percent of the observations are non-dectects, these will be replaced with one half the method detection limit prior to running the normality test and constructing the confidence limit.

If more than 15 percent, but less than 50 percent, of the data are less than the detection limit, the data's sample mean and standard deviation are adjusted according to the method of Cohen or Aitchison (U.S. EPA, April 1989). This adjustment is made prior to construction of the confidence limit.

If more than 50 percent of the data are less than the detection limit, these values are replaced with one half the method detection limit and a nonparametric confidence limit is constructed.

3.4 Parametric Confidence Limit Procedures

A minimum of four sample values is required for the construction of the parametric confidence limit. The mean, **X**, and standard deviation, **S**, of the sample concentration values are calculated separately for each compliance well. For each well, the confidence limit is calculated as:

$$\bar{X} \pm t_{(1-\alpha,\, n-1)} \frac{S}{\sqrt{n}}$$

Where:

> S = The compliance point's standard deviation;
>
> n = The number of observations for the compliance point; and

$t_{(1-\alpha,n-1)}$ is obtained from the Student's t-Distribution (appendix B; U.S. EPA, April 1989) with (n-1) degrees of freedom.

The use of the 95th percentile of the t-Distribution is consistent with the 5 percent α - level of individual well comparisons. If the lower limit is above the compliance limit, there is statistically significant evidence that the constituent exceeds a GWPS.

3.5 Nonparametric Confidence Limit Procedure

The nonparametric confidence limit procedure requires at least seven observations in order to obtain a one-sided significance level of 1 percent. The observations are ordered from smallest to largest and ranks are assigned separately within each well. Average ranks are assigned to tied values. The critical values of the order statistics are determined as follows.

If the minimum seven observations are used, the critical values are the first and seventh values. Otherwise, the smallest integer, **M**, is found such that the cumulative binomial distribution with parameters **n** (sample size) and probability of success, p=0.5, is at least 0.99.

The exact confidence coefficient for sample sizes from 4 to 11 are given by the EPA (Table 6-3; U.S. EPA, April 1989). For larger samples, take as an approximation the nearest integer value to:

$$\mathbf{M} = \frac{n}{2} + 1 + \mathbf{Z}_{(1-\alpha)} \sqrt{\frac{n}{4}}$$

Where:

$\mathbf{Z}_{(1-\alpha)}$ = The 1-α percentile from the normal distribution found in Table 4 (appendix B; U.S. EPA, April 1989); and

n = The number of observations in the sample.

Once **M** has been determined, **(n+1-M)** is computed and the confidence limits are taken as the order statistics, **X(M)** and **X(n+1-M)**. These confidence limits are compared to the GWPS as discussed in Section 3.

4 REFERENCES

Davis, Charles B. and McNichols, R.J., 1993. Exploring Ideas of "Background" in Groundwater Monitoring. Waste Management Update

Gibbons, Robert, D. 1994. Statistical Methods for Groundwater Monitoring, John Wiley & Sons, Inc. New York

Horsey, Henry R., and Carosone-Link, P., 1995. Managing RCRA Statistical Requirements to Minimize Ground Water Monitoring Costs, Proceeding of the American Chemical Society's Eleventh Annual Waste Testing and Quality Assurance Symposium

Intelligent Decision Technologies, 2002. Sanitas Users Manual, Version 8, Longmont, Colorado

International Ground Water Modeling Center, 1995. Ground Water Statistics and Regulations, Colorado School of Mines, Golden, Colorado.

Lichaa, Ada. 1998. MSW Groundwater Monitoring Regulatory Procedures, Proceedings ofthe 1998 Environmental Trade Fair, Austin, Texas.

U.S. Environmental Protection Agency Office of Solid Waste, 1992. Statistical Training Course for Ground-Water Monitoring Data Analysis.

U.S. Environmental Protection Agency, 1989. Statistical Analysis of Ground-Water Monitoring Data at RCRA Facilities, Interim Final Guidance, EPA/530/SW-89/026.

USEPA. 1992. Statistical Analysis of Ground-Water Monitoring Data at RCRA Facilities, Addendum to Interim Final Guidance (Draft).

FIGURES

FIGURE E-1
CONTROL CHART FLOWCHART

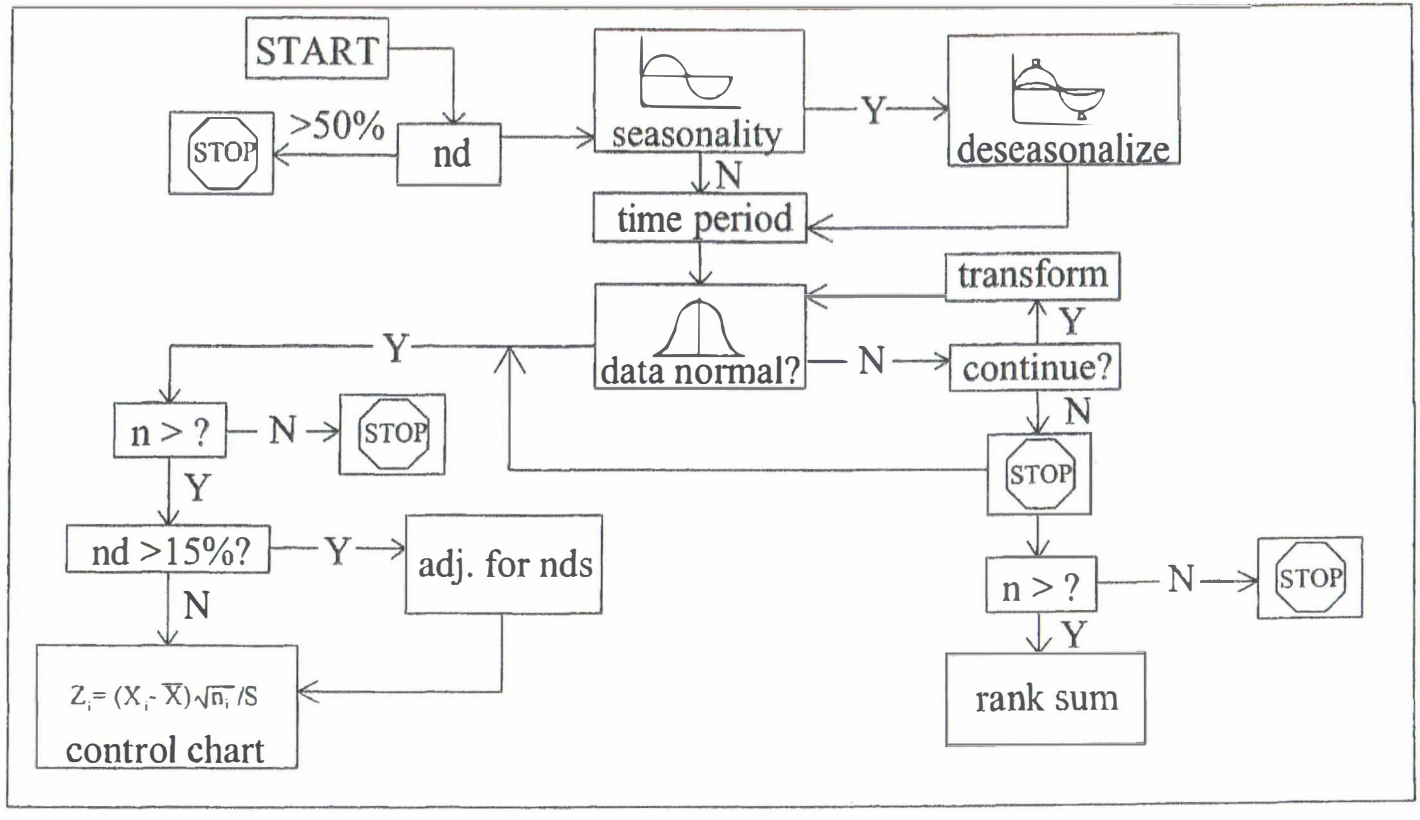

ource: Sanitas™ version 7.5

FIGURE E-2
PREDICTION LIMIT FLOWCHART

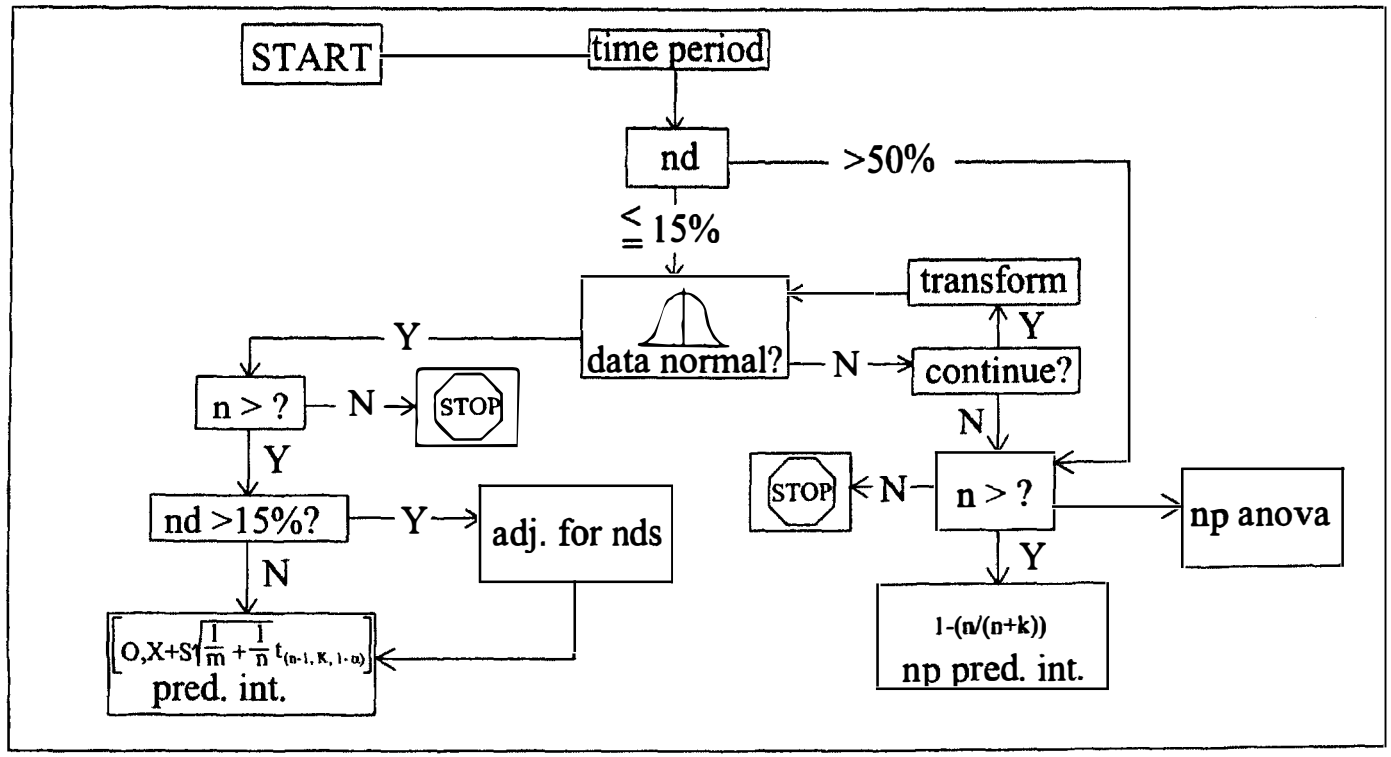

Source: Sanitas™ version 7.5

FIGURE E-3

95% CONFIDENCE INTERVAL FLOWCHART

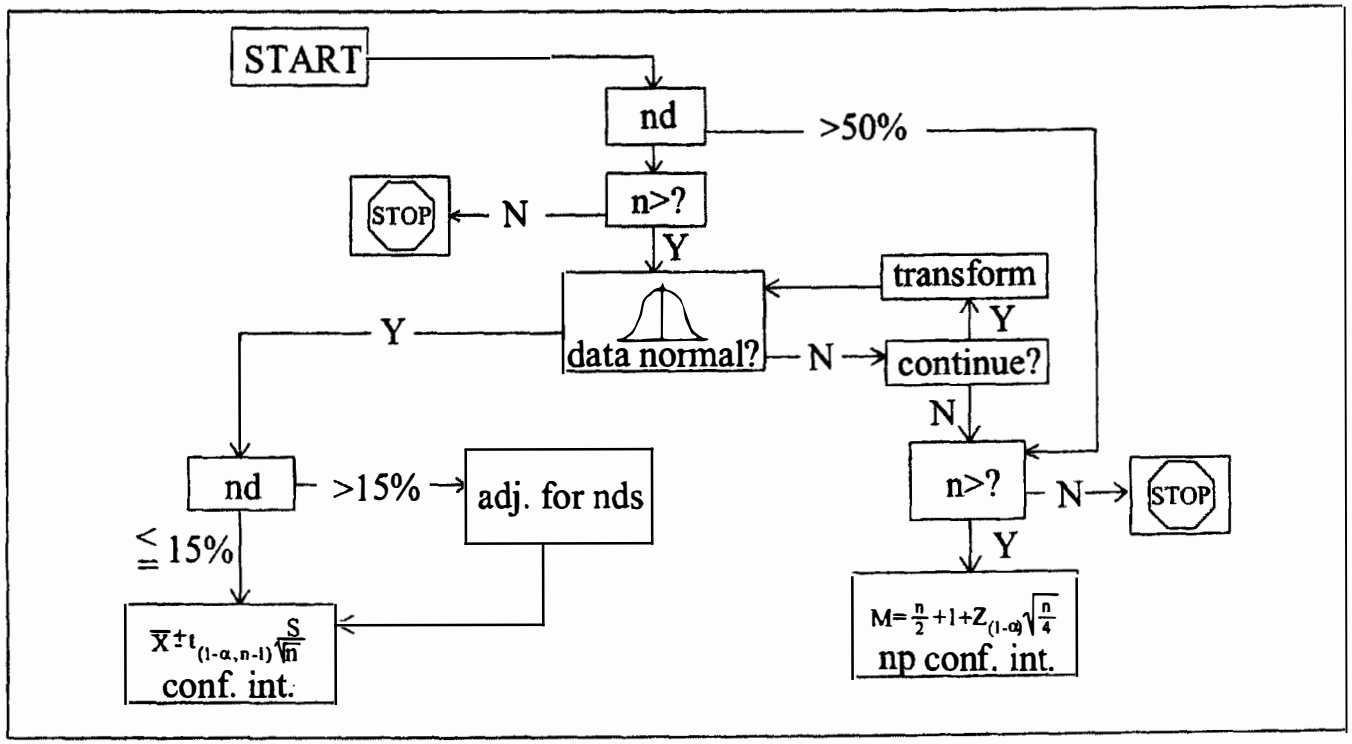

Source: Sanitas™ version 8.0

Attachment O

WASHINGTON COUNTY
SOLID WASTE SPECIAL SERVICE DISTRICT NO. 1
LANDFILL GAS QUARTERLY MONTORING RESULTS
YEAR ____ QUARTER ____

Date: _____ Time: _____

Name of Gas Sample Collector_____

Temperature_____ Weather_____

Monitoring device should be calibrated prior to initiating sampling.
Accomplished? Yes No

Methane Monitoring Location		Measured %LEL	Internal Action Limit: Half of Regulatory Limit (%LEL)	Regulatory Action Limit (%LEL)
1. NW Corner of the Scale House	Outside		12	25
	Inside		12	25
2. North Boundary			50	100
3. South Boundary			50	100
4. NW Corner of Treatment Pond			12	25
5. SW Corner of Composting Area			12	25

- **Gas Sample Collector:** If measured % LEL equals or exceeds internal action limit, contact the facility manager.
- **Facility Manager:** If measured % LEL equals or exceeds regulatory action limit, notify the State Director in compliance with 40 CFR 258.23(c).

Comments:

_____

_____

_____

_____

_____

_____

_____
Gas Sample Collector

Attachment P

Attachment 3

Inspection Forms

WASHINGTON COUNTY
SOLID WASTE SPECIAL SERVICE DISTRICT NO. 1
LANDFILL GAS QUARTERLY MONTORING RESULTS
YEAR ____ QUARTER ____

Date: _____ Time: _____

Name of Gas Sample Collector_____

Temperature_____ Weather_____

Monitoring device should be calibrated prior to initiating sampling.
Accomplished? Yes No

Methane Monitoring Location		Measured %LEL	Internal Action Limit: Half of Regulatory Limit (%LEL)	Regulatory Action Limit (%LEL)
1. NW Corner of the Scale House	Outside		12	25
	Inside		12	25
2. North Boundary			50	100
3. South Boundary			50	100
4. NW Corner of Treatment Pond			12	25
5. SW Corner of Composting Area			12	25

- **Gas Sample Collector:** If measured % LEL equals or exceeds internal action limit, contact the facility manager.
- **Facility Manager:** If measured % LEL equals or exceeds regulatory action limit, notify the State Director in compliance with 40 CFR 258.23(c).

Comments:

_____

_____

_____

_____

_____

_____

_____
Gas Sample Collector

WASTE INSPECTION REPORT

DATE **INSPECTORS**____________________________________

TIRE REPORT

$1.50	$2.00	$4.00	BY WEIGHT	LOCATION	NIGHT CANS	COUNTY CLEAN UP

LOCATIION	HAULER	LIC-TRUCK	VEHICLE TYPE	WASTE COMPOSITION

WASHINGTON COUNTY SANITARY LANDFILL
Random Load Inspection Record

INSPECTION INFORMATION

Inspector's Name: _____
Date of Inspection: _____
Time of Inspection: _____
Facility Name: _____

TRANSPORTATION COMPANY INFORMATION

Name: _____
Address: _____

_____

Phone Number: _____

VEHICLE INFORMATION

Driver's Name: _____
Vehicle Type: _____
Vehicle License Number: _____
Vehicle's Last Stop: _____
Vehicle Contents: _____

OBSERVATIONS AND ACTIONS TAKEN

_____
_____
_____
_____

Photo Documentation: ___ Yes ___ No

Driver's Signature*: _____ Date: _____

Inspector's Signature: _____ Date: _____

* Driver's signature hereon denotes: His presence during the inspection and does not admit, confirm or identify liability.

ALL DISTRICT EMPLOYEES PRESENT MUST SIGN BOTTOM OF FORM

INSPECTION LOG

Washington County Landfill Facility

Name of Area Inspected	OK	Needs Repair	Comments
Total Containment Evaporation Pond			
18" Leachate Outfall Line			
12" Leachate Collection Line			
Run-off Drainage Channel			
Run-on Drainage Channel			
Perimeter Fencing and Access Gates			
Landfill Cell			
TIME:	**DATE:**	**INSPECTOR:**	**SIGNATURE:**

Attachment 4

Closure and Post-Closure

Design And Location Of Run-On And Run-Off Control Systems (R315-310-4(2)(c)(viii)):

The run-on/run-off collection system consists mainly of an open ditch channelizing system which will also handle run-off water from those open portions of the landfill unit. Any leachate contaminated run-off water is collected at the open lined pond for containment for evaporation.. The containment pond is lined with a membrane liner to prevent seepage of the leachates into the surrounding ground. Maintenance of the channel system and containment pond will consist mainly of weed control. Details of the stormwater management and collection system can be found in Attachment O, Master Plan Drawings as Appendix A. Drainage calculations and design can be found in Appendix D of the said Master Plan Drawings.

Site Closure And Post-Closure Plan (R315-310-3(1)(h))

Closure Plan (R315-310-3(1)(h))

Closure Schedule (R315-310-4(2)(d)(I)):

The closure schedule of the Washington County Landfill Facility will be as cited in section *Anticipated facility life and the basis for calculating the facility's life (R315-310-4(2)(c)(ii))* of this permit application.

Design Of Final Cover (R315-310-4(2)(c)(Iii)):

The cell design including liner design, cover design, fill methods, elevation of final cover including plans and drawings are contained in Master Plan Report, Appendix A, in Attachment O of this permit application. Detailed landfill final closure construction drawings will be submitted prior to any future construction to the Director for approval.

Capacity Of Site In Volume And Tonnage (R315-310-4(2)(d)(Ii)):

The capacity of the site in volume and tonnage has been determined using latest topographic maps of the facility and the Master Plan fill plans (Attachment O). The site has been recently surveyed as discussed above. The total remaining volume and tonnage capacity of the site is approximately 27,140,200 cubic yards and 16,251,600 tons of waste (excluding cover) respectively.

Final Inspection By Regulatory Agencies (R315-310-4(2)(d)(Iii)):

All items of closure work performed by the contractor will be subject to inspection by the District, its representatives or representatives of regulatory agencies having jurisdiction over the operation of the landfill. To ensure compliance with all rules and regulations that apply to the landfill, a final closure plan will be submitted prior to any closure construction to the Director for approval.

Prior to the existing landfill unit closure construction, the District will notify the regulatory agency responsible for the operations of the landfill facility in order that inspection trips may be planned.

All test results for all phases of closure construction will be kept on file as part of the landfill record.

Post-Closure Care Plan (R315-310-3(1)(h))

Site Monitoring Of Landfill Gases, Ground Water, And Surface Water, If Required (R315-310-4(2)(e)(i)):

Ground water monitoring will continue during the post-closure care period as it is apparent that there is a perched water aquifer requiring the installation of ground water monitoring equipment. Maintenance of water monitoring equipment during this period consists of protection and maintaining of the monitoring well heads.

As there are no surface water sources on the landfill property, it will not be required of the District to conduct surface water monitoring as part of the post-closure care activities.

Upon closure of the landfill facility, leachate will be collected and treated as needed. During the years of operation prior to closure, a de-watering/run-off system has been and will be constructed to collect and remove all contaminated water from unclosed units and deposit the water in a total containment evaporation pond. After all units are covered with a protective cap system, the de-watering systems will remain in-place and continue to drain any moisture within the units. Post-closure maintenance of this system will consist of maintaining the integrity of the evaporation pond membrane lining system through weed and erosion control. It is expected that the facility will be entirely capped. There will be little, if any, leachate collected in the evaporation pond during the actual post-closure care period.

Gas monitoring will continue after closure of the landfill facility during the post-closure care period. Maintenance of gas monitoring equipment during this period consists of regular calibrations, and occasional repair or replacement of the actual gas equipment as per manufactures recommendations.

Withdrawals from the selected financial assurance instrument for the costs incurred by the District for performing the regularly scheduled quarterly inspections and methane gas monitoring will be requested at the end of each quarter that the inspections are made. Withdrawals for any required additional inspection trips and maintenance work performed will also be made at the as needed in which it was performed.

Changes To Record Of Title, Land Use, And Zoning Restrictions (R315-310-4(2)(e)(ii)):

Change of ownership of the property has occurred. On January 21, 1994, the United States of America gave and granted the property that contains the Washington County Landfill Facility to Washington County. Washington County then leased the property to the Washington County Solid Waste Special Service District #1. Washington County Landfill Inc., a wholly owned subsidiary of Republic Waste Services, Inc. operates the landfill facility. A copy of the deed and the lease agreement are contained in Attachments A and B of this permit application. There have been no additional changes to the zoning and land use restrictions.

Maintenance Activities To Maintain Cover And Run-On/Run-Off Control Systems (R315-310-4(2)(e)(iii)):

There are no surface water sources on the landfill property, other than normal stormwater runoff. As a result Washington County Landfill will not conduct surface water monitoring as part of the post-closure care activities.

The water balance indicates that, upon closure of the landfill facility, there will be no leachate collection or associated treatment. A leachate collection and extraction system has been provided however in the new cells, where leachate is extracted from sumps and recirculated back to the landfill. A run-off control system has been constructed to collect and remove all contaminated water from unclosed units and deposit the water in a Total Containment Evaporation Pond. After all units are covered with a protective cap system, the leachate collection system and run-off control systems will remain in-place and continue to drain any moisture within the units. Post-closure maintenance of this system will consist of maintaining the integrity of the evaporation pond membrane lining system through weed and erosion control. It is expected that the facility will be entirely capped, there will be little, if any, leachate collected in the evaporation pond during the actual post-closure care period.

Maintenance of the leachate evaporation pond as discussed previously will consist of weed and erosion control to ensure that any collected leachate is contained. Regular inspection will be made to determine the integrity of the pond and volume of collected leachates if any.

The run-off water channels along the perimeter of the closed landfill unit will require routine inspection and cleaning to ensure that obstructions do not occur. In conjunction with the routine inspection of the run-off water channels, inspection of the protective cap system will be performed to ensure that the vegetation continues to protect the cover soil from erosion.

Regular inspections will be made to ensure the integrity of the protective cap system and the run-on/run-off systems. It is understood that erosion can have an adverse effect upon the landfill facility, and, if left unchecked or not maintained, could become a public health hazard. It is Washington County Landfill, Inc.'s intention to implement a maintenance program to

ensure the integrity of the landfill facility and remaining structures during the post-closure period, thus protecting the public and the environment.

It is anticipated that weed control in the run-off water channels and evaporation pond will require maintenance annually. This post-closure maintenance should be performed mid to late winter prior to the germination of the seeds in the spring.

List The Name, Address, And Telephone Number Of The Person Or Office To Contact About The Facility During The Post-Closure Care Period (R315-310-4(2)(e)(vi)):

The names, address, and telephone number of the person or office to contact about the facility during the post-closure care period is as follows:

Name:	Washington County Special Services District #1 Neil Schwendiman, District Manager
Address:	325 North Landfill Road Washington, Utah 84780
Phone #:	(435) 673-2813

Financial Assurance (R315-310-3(1)(j))

Identification Of Closure Costs Including Cost Calculations (R315-310-4(2)(d)(iv)):

The closure costs associated with closing the existing landfill as modified through the year 2016 are contained in Attachment P of this permit application.

Identification Of Post-Closure Care Costs Including Cost Calculations (R315-310-4(2)(e)(iv)):

The costs associated with post-closure care of the existing landfill cell, as modified through the year 2065, are contained in Attachment P of this permit application.

Identification Of The Financial Assurance Mechanism That Meets The Requirements Of Rule R315-309 And The Date That The Mechanism Will Become Effective (R315-309-1(1)):

The Washington County Solid Waste Special Service District entered into an escrow agreement with the State of Utah as a financial assurance mechanism to provide funding for closure of its existing cells. The Utah State Treasurer is acting as the escrow agent. The terms of the agreement include the Washington County Special Service District #1 making monthly payments into the escrow account such that the funds would be available to complete the closure and post closure requirements. The balance of the fund as of September 30, 2016 is included in Attachment Q which shows the Statement of Account which shows a fund balance of $3,040,237.03. There will be adequate funds in the account to cover closure and post-closure care costs of the existing landfill cell. Funds could be withdrawn for payment of closure and

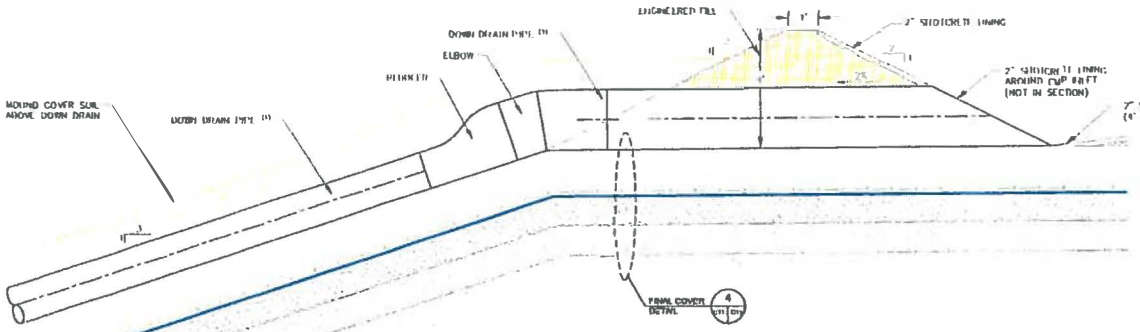

TOP DECK DOWN DRAIN

SECTION E

1"=2'

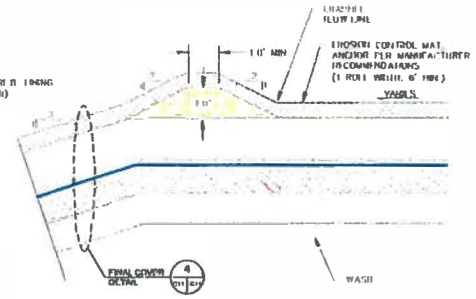

TOP DECK PERIMETER BERM

DETAIL 3

1"=2'

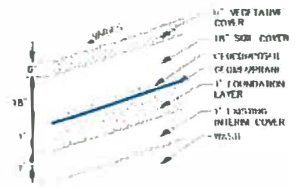

FINAL COVER

DETAIL 4

1"=2'

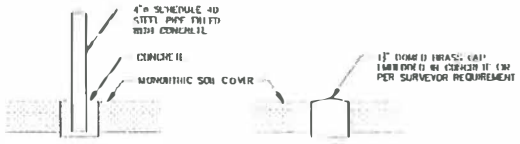

SECTION A-A'

SECTION B-B'

MIN. CONCRETE STRENGTH 3,000 PSI

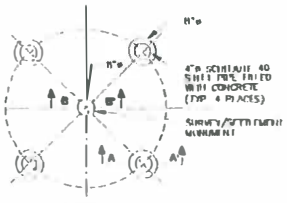

PLAN

SURVEY/SETTLEMENT MONUMENT

DETAIL 5

NTS

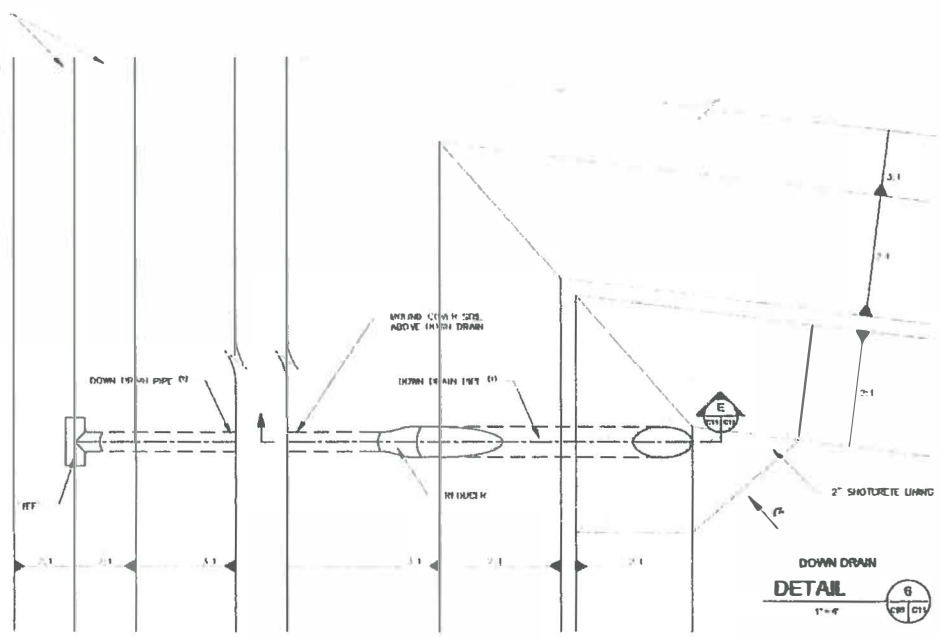

DOWN DRAIN

DETAIL 6

1"=4'

NOTES:
1. SEE DRAINAGE SUMMARY APPENDIX D OF REPORT

REV. NO.	DATE	DESCRIPTION	DRAWN BY	DESIGNED BY	CHECKED BY	APPROVED BY
	08/16/07	ISSUED FOR PLANNING	JGP	JVR	JVR	JVR

DATE OF ISSUE: 08/16/2007
DESIGNED BY: JVR
DRAWN BY: JGP
CHECKED BY: JVR
APPROVED BY: JVR

VECTOR ENGINEERING, INC.

USA • CENTRAL & SOUTH AMERICA • PHILIPPINES
14381 Spring Hill Drive, Grass Valley, CA 95945 +1-530-272-2448 +1-530-272-8533fax

Washington County
Special Service District Number 1

WASHINGTON COUNTY LANDFILL
MASTER PLAN
WASHINGTON, UTAH

CLOSURE DETAILS

DRAWING NO. C11

PROJECT NO. 071204.00

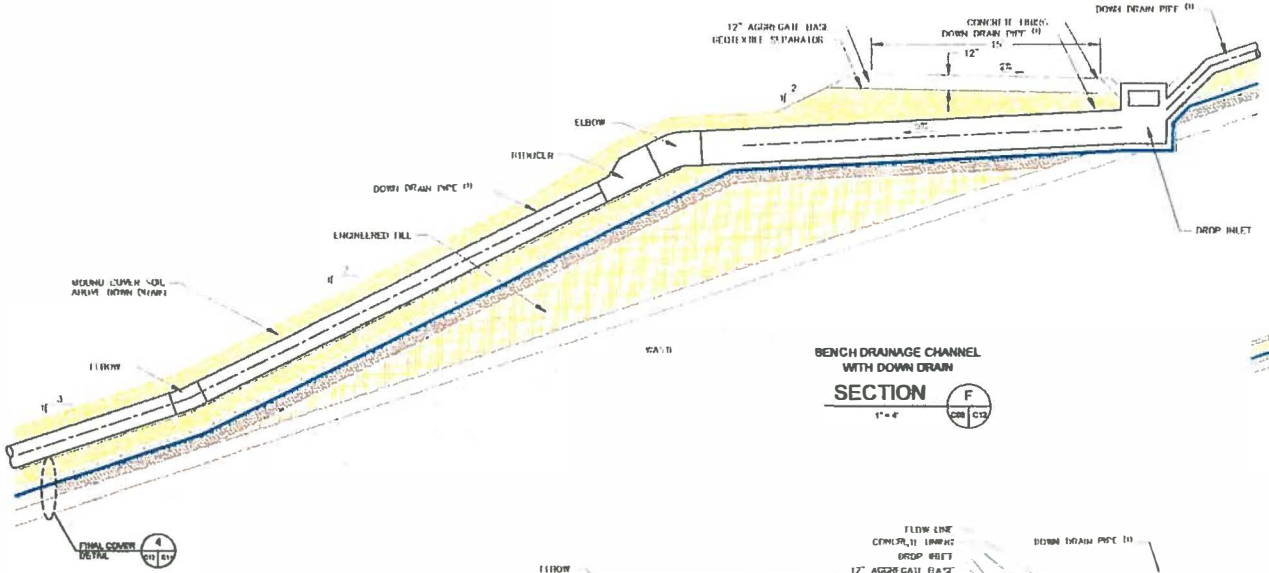

BENCH DRAINAGE CHANNEL
WITH DOWN DRAIN
SECTION F
1"=4'
C12 C13

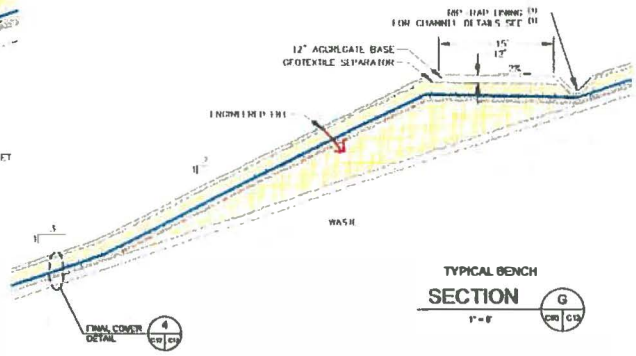

TYPICAL BENCH
SECTION G
1"=8'
C12 C13

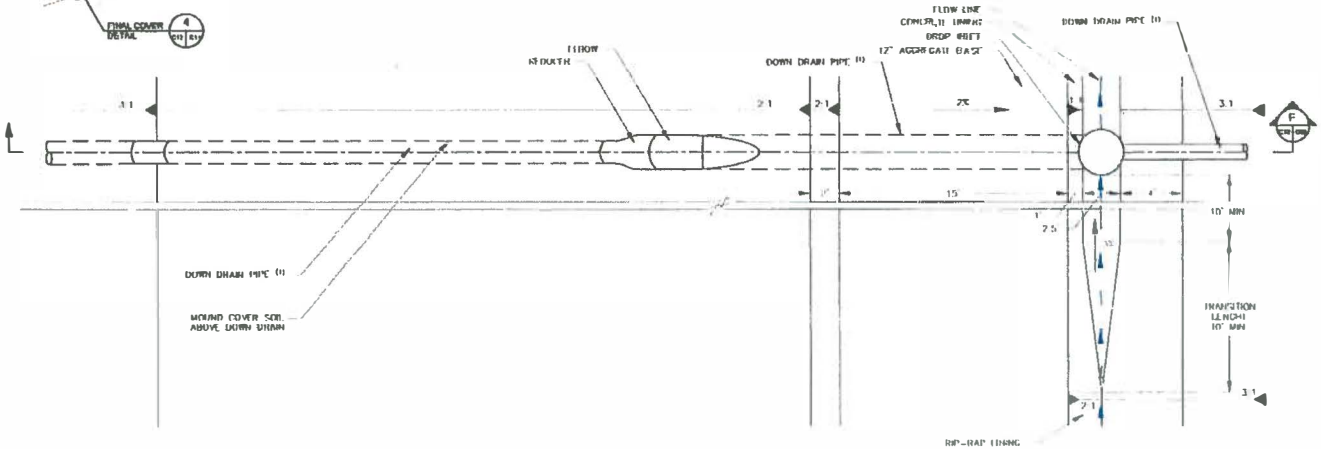

BENCH DRAINAGE INLET
DETAIL 7
1"=4'
C12 C13

NOTES:
1. SEE DRAINAGE SUMMARY APPENDIX D OF REPORT

REV. NO.	DATE	DESCRIPTION	DRAWN BY	DESIGNED BY	CHECKED BY	APPROVED BY
	08/14/07	ISSUED FOR PLANNING	JCP	JVR	JVR	JVR

DATE OF ISSUE: 08/14/2007
DESIGNED BY: JVR
DRAWN BY: JCP
CHECKED BY: JVR
APPROVED BY: JVR

VECTOR ENGINEERING, INC.
USA • CENTRAL & SOUTH AMERICA • PHILIPPINES
14311 Spring Hill Drive, Grass Valley, CA 95945 +1 530 273 2446 +1 530 272 853 3 fax

Washington County
Special Service District Number 1

WASHINGTON COUNTY LANDFILL
MASTER PLAN
WASHINGTON, UTAH
CLOSURE DETAILS

DRAWING NO. C12
PROJECT NO. 071204.00

Attachment 5

Financial Assurance

ensure the integrity of the landfill facility and remaining structures during the post-closure period, thus protecting the public and the environment.

It is anticipated that weed control in the run-off water channels and evaporation pond will require maintenance annually. This post-closure maintenance should be performed mid to late winter prior to the germination of the seeds in the spring.

List The Name, Address, And Telephone Number Of The Person Or Office To Contact About The Facility During The Post-Closure Care Period (R315-310-4(2)(e)(vi)):

The names, address, and telephone number of the person or office to contact about the facility during the post-closure care period is as follows:

Name:	Washington County Special Services District #1 Neil Schwendiman, District Manager
Address:	325 North Landfill Road Washington, Utah 84780
Phone #:	(435) 673-2813

Financial Assurance (R315-310-3(1)(j))

Identification Of Closure Costs Including Cost Calculations (R315-310-4(2)(d)(iv)):

The closure costs associated with closing the existing landfill as modified through the year 2016 are contained in Attachment P of this permit application.

Identification Of Post-Closure Care Costs Including Cost Calculations (R315-310-4(2)(e)(iv)):

The costs associated with post-closure care of the existing landfill cell, as modified through the year 2065, are contained in Attachment P of this permit application.

Identification Of The Financial Assurance Mechanism That Meets The Requirements Of Rule R315-309 And The Date That The Mechanism Will Become Effective (R315-309-1(1)):

The Washington County Solid Waste Special Service District entered into an escrow agreement with the State of Utah as a financial assurance mechanism to provide funding for closure of its existing cells. The Utah State Treasurer is acting as the escrow agent. The terms of the agreement include the Washington County Special Service District #1 making monthly payments into the escrow account such that the funds would be available to complete the closure and post closure requirements. The balance of the fund as of September 30, 2016 is included in Attachment Q which shows the Statement of Account which shows a fund balance of $3,040,237.03. There will be adequate funds in the account to cover closure and post-closure care costs of the existing landfill cell. Funds could be withdrawn for payment of closure and

post closure expenses upon authorization by both the Washington County Special Service District #1 and the Director of the Solid and Hazardous Waste Control Board.

Attachment P of this permit application contains a table showing the cost calculations for post-closure care costs for the 30 years.

STATEMENT OF ACCOUNT

PTIF

UTAH PUBLIC TREASURERS' INVESTMENT FUND

David Damschen, Utah State Treasurer, Fund Manager
PO Box 142315
350 N State Street, Suite 180
Salt Lake City, Utah 84114-2315
Local Call (801) 538-1042 Toll Free (800) 395-7665
www.treasurer.utah.gov

ESC-WASHINGTON CO-LANDFILL
NEIL SCHWENDIMAN
325 N LANDFILL RD
WASHINGTON, UT 84780-1995

Account	Account Period
2103	September 01, 2016 through September 30, 2016

Summary

Beginning Balance	$ 3,037,591.40	Average Daily Balance	$ 3,037,591.40
Deposits	$ 2,645.63	Interest Earned	$ 2,645.63
Withdrawals	$ 0.00	360 Day Rate	1.0452
Ending Balance	$ 3,040,237.03	365 Day Rate	1.0597

Date	Activity	Deposits	Withdrawals	Balance
09/01/2016	FORWARD BALANCE	$ 0.00	$ 0.00	$ 3,037,591.40
09/30/2016	REINVESTMENT	$ 2,645.63	$ 0.00	$ 3,040,237.03
09/30/2016	ENDING BALANCE	$ 0.00	$ 0.00	$ 3,040,237.03

STATEMENT OF ACCOUNT

PTIF

UTAH PUBLIC TREASURERS' INVESTMENT FUND

David Damschen, Utah State Treasurer, Fund Manager
PO Box 142315
350 N State Street, Suite 180
Salt Lake City, Utah 84114-2315
Local Call (801) 538-1042 Toll Free (800) 395-7665
www.treasurer.utah.gov

WASHINGTON CO SSD-SALE PREP
NEIL SCHWENDIMAN
325 N LANDFILL RD
WASHINGTON UT 84780

Account	Account Period
2102	September 01, 2016 through September 30, 2016

Summary

Beginning Balance	$ 2,873,635.23	Average Daily Balance	$ 2,873,635.23
Deposits	$ 2,502.83	Interest Earned	$ 2,502.83
Withdrawals	$ 0.00	360 Day Rate	1.0452
Ending Balance	$ 2,876,138.06	365 Day Rate	1.0597

Date	Activity	Deposits	Withdrawals	Balance
09/01/2016	FORWARD BALANCE	$ 0.00	$ 0.00	$ 2,873,635.23
09/30/2016	REINVESTMENT	$ 2,502.83	$ 0.00	$ 2,876,138.06
09/30/2016	ENDING BALANCE	$ 0.00	$ 0.00	$ 2,876,138.06

Attachment 6

Closure and Post-Closure Cost Estimates

Geo-Logic
ASSOCIATES

February 18, 2016
Project No. 2016.A007

Mr. Darin Olson
Republic Services
1111 West Hwy 123
East Carbon, UT 84520

Re: 2016 Closure Post-Closure Estimate for the Washington County Landfill

Dear Darin,

Per your request, Geo-Logic Associates (GLA) has revised the Closure and Post-Closure Cost Estimate for the Washington County Landfill operated by Republic Services, Inc. (Republic). This letter is provided to certify that the attached estimates (Tables 1 through 3) were prepared in accordance with generally accepted civil engineering and waste management practices and in accordance with the requirements of 40 CFR 258.60, Subpart F. It should be noted that no corrective action is anticipated for the site and therefore, no costs for corrective action are provided in the estimates.

The 2016 Closure and Post-Closure Costs were derived after reviewing the previous cost estimates and adjusting the cost spreadsheets, where applicable, by the Utah Department of Environmental Quality (UDEQ) Inflation Adjustment of 1.01. Please note that there were no changes from the 2015 to 2016 Closure Cost due to an increase in the landfill area from expansion construction or new closure activities.

We hope this provides you with the information you requested. If you have any question regarding the cost estimate, please contact me at your earliest convenience at (530) 272-2448.
Sincerely,

Geo-Logic Associates, Inc.

Jake Russell, P.E.
Senior Project Manager

REGISTERED PROFESSIONAL ENGINEER
5881834-2202
JACOB V. RUSSELL
3/31/17
State of Utah

Enclosure - Tables 1 through 3

143E Spring Hill Drive, Grass Valley, California 95945 Phone (530) 272-2448 Fax (530) 272-8533

TABLE 1
WASHINGTON COUNTY LANDFILL
FINAL CAPPING COST ESTIMATES SUMMARY

AREA OF UNLINED LANDFILL:	**2,051,310 SQUARE FEET**				
AREA OF LINED LANDFILL:	**728,533 SQUARE FEET**				
SIZE OF CLOSURE AREA:	**63.8 ACRES**				
CLOSURE COSTS	**MEASURE**	**UNIT COST (1)**	**QUANTITY**	**TOTAL**	
Grading of Waste/Surface Preparation	Acre	$ 3,411.36	64	$	**217,645.00**
Surveying	Acre	$ 1,137.12	64	$	**72,548.33**
Supply & Placement of Cover Soil (2)(3)					
Contractor Mobilization/Demobilization	Lump Sum	$ 73,912.88	1	$	73,912.88
Final Cover Borrow Source Identification (Testing and Labor)	Lump Sum	$ 11,830.61	1	$	11,830.61
Low-Permeability Infiltration Layer (18")	Cubic Yard	$ 11.83	114,000	$	1,348,689.43
Protective Soil Cover for Geomembrane (12")	Cubic Yard	$ 8.64	27,000	$	233,337.27
Topsoil Layer (6")	Cubic Yard	$ 3.35	51,500	$	172,757.14
Subtotal - Supply and Placement of Cover Soil				$	**1,840,527.33**
Supply & Placement of Geosynthetics					
40-mil Double-Textured LLDPE Geomembrane Cap	Square Feet	$ 0.21	728,533	$	150,774.32
Geomembrane Cap Installation	Square Feet	$ 0.12	728,533	$	86,985.18
Geocomposite (250 mil Drainage Net, Double-Sided 8 oz. Geotextile)	Square Feet	$ 0.47	728,533	$	343,798.58
Geocomposite Drainage Layer Installation	Square Feet	$ 0.10	728,533	$	70,416.58
Subtotal - Supply and Placement of Geosynthetics				$	**651,974.67**
Supply & Application of Seed					
Seed Purchase	Acre	$ 443.65	64	$	28,304.73
Seed Application	Acre	$ 443.65	64	$	28,304.73
Subtotal - Supply and Application of Seed				$	**56,609.46**
Earthwork for Stormwater Management					
Drainage Improvements	Lump Sum	$ 206,956.06	1	$	206,956.06
Subtotal - Earthwork and Stormwater Management				$	**206,956.06**
Landfill Gas Control System Installation					
Complete Gas Collection & Control System (GCCS)	Lump Sum	$ 1,124,382.24	1	$	1,124,382.24
Subtotal - Landfill Gas Control System Installation				$	**1,124,382.24**
Other: (List)					
Project Mgmt. & QC/QA (Construction Oversight, QC/QA Testing during Installation, & CQA Report)	Acre	$ 2,319.73	64	$	147,998.60
Engineering & Construction Drawings	Lump Sum	$ 40,595.23	1	$	40,595.23
Subtotal - Other				$	**188,593.83**
TOTAL				$	**4,359,236.92**

NOTES:

1 - Unit rates are reported in 2016 third-party dollars.

2 - Final cover system (top to bottom): 6" topsoil layer, 18" of low-perm soil (unlined area); 6" topsoil layer, 12" soil cover, 40 mil LLDPE (lined area).

3 - Initial 12" of foundation layer is placed as part of daily/intermediate cover.

4 - Corrective actions are currently not occurring on-site or anticipated on-site..

REGISTERED PROFESSIONAL ENGINEER
5881834-2202
JACOB V. RUSSELL
3/31/17
State of Utah

TABLE 2
WASHINGTON COUNTY LANDFILL
POST-CLOSURE COST ESTIMATES SUMMARY

LENGTH OF CLOSURE ACTIVITIES: 30 YEARS

FINAL CLOSURE COSTS					COST/ YEAR	30-YEAR TOTAL
Closure Certification[1][4]					$ 1,737.73	$ 52,132.02
MAINTENANCE COSTS[1][4]						
Security, fencing, gates, signs, access, etc.					$ 2,040.78	$ 61,223.40
Erosion repair, settlement repair, revegetation					$ 5,915.30	$ 177,459.14
Surface water control maintenance (run-on/run-off)					$ 2,957.65	$ 88,729.57
Monitoring system maintenance, repair, replacement					$ 1,183.06	$ 35,491.83
Leachate collection system, repair, replacement					$ 1,183.06	$ 35,491.83
Subtotal - Maintenance Costs					**$ 13,279.86**	**$ 398,395.76**
MONITORING COSTS [2][3][4]	**# OF WELL/PTS**	**# OF SAMPLES**	**FREQ/ YEAR**	**COST/ SAMPLE**	**COST/ YEAR**	
Groundwater						
3rd Party/Sample Collection[3]	3	1	2	$ 193.31	$ 1,159.89	
3rd Party/Statistical Analysis[3]	1	1	2	$ 869.90	$ 1,739.80	
Lab Analysis	3	1	2	$ 425.29	$ 2,551.72	
Subtotal - Groundwater					**$ 5,451.41**	**$ 163,542.16**
Leachate Analysis						
3rd Party/Sample Collection[3]	2	2	2	$ -	$ -	
Lab Analysis (Bi-Annual for 10 years)	2	2	2	$ 347.96	$ 2,783.67	
Subtotal - Leachate Analysis					**$ 2,783.67**	**$ 83,510.18**
Landfill Gas						
3rd Party/Operation and Maintenance[3][5]	25	1	12	$ 177.39	$ 53,217.27	
Subtotal - Landfill Gas					**$ 53,217.27**	**$ 798,259.09**
Oversite Inspection		**HRS/ INSPECT.**	**FREQ/ YEAR**	**COST/ SAMPLE**	**COST/ YEAR**	
3rd Party Oversite Inspections		4	4	$ 109.04	$ 1,744.60	
Subtotal - Oversite Inspection					**$ 1,744.60**	**$ 52,338.09**
Total					**$ 78,214.55**	**$ 1,548,177.30**

NOTES:

1 - Rates are reported in 2016 third-party dollars.

2 - Surface water monitoring costs are not included due to no local surface water sources.

3 - Estimate reflects third-party semi-annual sample collection, lab analysis, and statistical evaluation, monitoring and facility inspection, conducted together, when appropriate.

4 - All overhead for oversight and record keeping included within unit rates.

5 - The landfill gas operation and maintenance total cost is based on operating the system for 15 years.

REGISTERED PROFESSIONAL ENGINEER
5881834-2202
JACOB V. RUSSELL
3/31/17
State of Utah

TABLE 3 WASHINGTON COUNTY LANDFILL CLOSURE/POST-CLOSURE CARE COST SUMMARY		
SIZE OF CLOSURE AREA:	**63.8 ACRES**	
TOTAL CLOSURE COSTS:	**$**	**4,359,237**
TOTAL POST-CLOSURE COSTS:	**$**	**1,548,177**
TOTAL CORRECTIVE ACTION COSTS:	**$**	**-**
TOTAL COST ESTIMATE:	**$**	**5,907,414**

NOTES:

1 - Total Costs are reported in 2016 third-party dollars.

2 - Includes a complete gas collection & control system (GCCS).

3 - Corrective actions are currently not anticipated at the site.

REGISTERED PROFESSIONAL ENGINEER
5881834-2202
JACOB V. RUSSELL
3/31/17
State of Utah