ATTACHMENT 20

HYDROLYSIS SYSTEM DRAWINGS

Attachment 20
Hydrolysis System Drawings

Drawing number	Sheet	Revision	Date	Title
59C002	1 of 1	B	4-2-13	Process Flow Diagram for CAD HPPP
59C003	1 of 3	D	9-2-08	CAD HPPP Piping & Instrumentation Diagram
59C003	2 of 3	A	4-2-13	CAD HPPP Piping & Instrumentation Diagram
59C003	3 of 3	A	4-2-13	CAD HPPP Piping & Instrumentation Diagram
GA041508	1 of 1	A	9-2-08	15,000 – 25,000 CFM Alkaline Scrubbing System
30159D00000	1 of 4	2	4-2-13	Tooele Bldg 1400 Equipment Layout Plan
30159D00000	2 of 4	1	4-2-13	Tooele Bldg 1400 Equipment Layout Plan
30159D00000	3 of 4	1	4-2-13	Tooele Bldg 1400 Equipment Layout Elevations
30159D00000	4 of 4	1	4-2-13	Tooele Bldg 1400 Equipment Layout Isometric
050425-A-CS-01	1 of 1	A	4-2-13	Cross Section General Atomics
050425-B-TL-01	1 of 1		7-15-08	Tankline Layout General Atomics
050425-C-TC-01	1 of 1	A	4-2-13	NaOH Tank Cover General Atomics
050425-D-DP-01	1 of 4		7-15-08	Drip Pan & Shields Assembly General Atomics
050425-R-BL-01	1 of 1		7-15-08	Barrel Layout General Atomics
050425-R-BR-01	1 of 1		7-15-08	Barrel Rotator Assembly General Atomics
050425-P-PA-01	1 of 1		7-15-08	Push Air Piping General Atomics
050425-V-VA-01-A	1 of 5	A	7-15-08	Ventilation Assembly General Atomics
59C004	1 of 1	B	4-2-13	Cad HPPP Electrical Single Line Drawing

CAD FILE	DATE / TIME
59C002A1.DWG	03/20/2008

REVISIONS

REV	DATE	ZONE	DESCRIPTION	DR	CHK	ENG	APPD	APPD	QA	APPD
N/C	08/03/2004		INITIAL RELEASE (30159-100-21104)	CHH						
A	05/15/2008		ADDED SC-800 SCRUBBER	RJY						
B	03/28/2013		CHILLER TO BE REMOVED	TT						

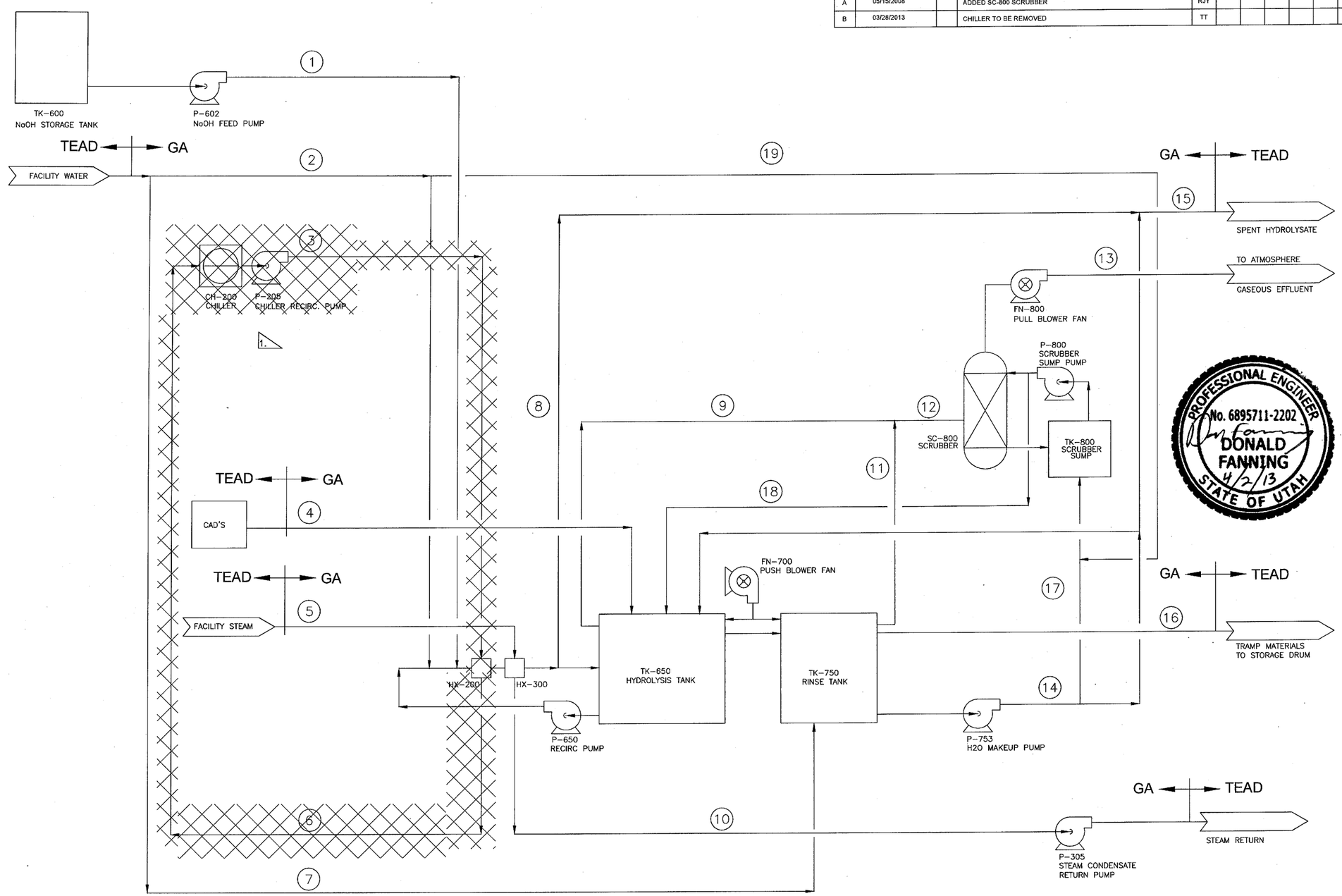

PROFESSIONAL ENGINEER
No. 6895711-2202
DONALD FANNING
4/2/13
STATE OF UTAH

NOTE:

1. CHILLER TO BE REMOVED.

QTY REQD				-1	ITEM	PART NO	DESCRIPTION	MAT'L/SPEC	SHT No.

PARTS LIST

PART DASH No.	NEXT ASSY	USED ON
-1	599C03	

APPLICATION

☐ GA PROPRIETARY INFORMATION

THIS DOCUMENT IS THE PROPERTY OF GENERAL ATOMICS (GA). ANY TRANSMITTAL OF THIS DOCUMENT OUTSIDE GA WILL BE IN CONFIDENCE, EXCEPT WITH THE WRITTEN CONSENT OF GA. (1) THIS DOCUMENT MAY NOT BE COPIED IN WHOLE OR IN PART AND WILL BE RETURNED UPON REQUEST OR WHEN NO LONGER NEEDED BY RECIPIENT AND (2) INFORMATION CONTAINED HEREIN MAY NOT BE COMMUNICATED TO OTHERS AND MAY BE USED BY RECIPIENT ONLY FOR THE PURPOSE FOR WHICH IT WAS TRANSMITTED.

☒ NO GA PROPRIETARY INFORMATION

PROJECT	30159
SYSTEM	N/A
APPVL	5
EC/SC	N/A
DISC	0
SEIS	N/A
TYPE	PFD
ELEC	N/A

☐ R & D
☒ DV & S
☐ DESIGN

UNLESS OTHERWISE SPECIFIED DIMENSIONS ARE IN INCHES. NO BURRS OR SHARP EDGES. DIMENSIONS PER ASME Y14.5M

TOLERANCES:
FRACTIONS DECIMALS ANGLES
± .X ± ±
.XX ±
.XXX ±
ALL MACHINED SURFACES √

CALC WT —
GAL N/A

GENERAL ATOMICS
SAN DIEGO, CALIFORNIA

TITLE: PROCESS FLOW DIAGRAM FOR CAD HPPP

SIZE	CAGE CODE	DWG NO	REV
C	4V360	59C002	A

SCALE NONE
SHEET 1 OF 1

CAD FILE 59C00301.DWG | DATE / TIME 08/14/2008

REV	DATE	ZONE	DESCRIPTION	DR	CHK	ENG	APPD	APPD	QA	APPD
N/C	06/20/2004		INITIAL RELEASE (30159-100-21104)		ORIGINAL SIGNED					
A	12/3/2004		REVISIONS NOTED (A) (A30159-100-21104)	CHH	ORIGINAL SIGNED					
B	10/29/2007		REVISIONS NOTED (B) (A30159/0850)	CHH	ORIGINAL SIGNED					
C	05/20/2008		REVISIONS NOTED (C) (A30159/0850)	RJY	ORIGINAL SIGNED					
D	AUG 2 0 2008		REVISIONS NOTED (D) (A30159/0850)	RJY						

RELEASED

LEGEND

1. MISCELLANEOUS

- INCOMING/OUTGOING STREAM
- DRAWING CONTINUATION
- (A) CONTINUATION ON SAME DRAWING SHEET

2. EQUIPMENT

- NaOH STORAGE TANK
- HYDROLYSIS TANK
- RINSE TANK
- HEAT EXCHANGER
- DIAPHRAGM PUMP
- BASKET
- BASKET RACK
- CENTRIFUGAL PUMP
- STEAM SEPARATOR
- FAN OR BLOWER
- TANK w/ MIXER
- FILTER OR STRAINER
- COMPRESSOR
- TANK
- BASKET CARRIAGE SYSTEM
- SAFE TANK W/ HEATER
- 55 GAL. DRUM
- SCRUBBER

3. VALVING

- MANUALLY OPERATED BALL VALVE (NORMALLY OPEN)
- MANUALLY OPERATED BALL VALVE (NORMALLY CLOSED)
- GATE VALVE (NORMALLY OPEN)
- GATE VALVE (NORMALLY CLOSED)
- AIR-ACTUATED BALL VALVE (NORMALLY OPEN)
- AIR-ACTUATED BALL VALVE (NORMALLY CLOSED)
- REDUCER
- CHECK VALVE
- 3-WAY GATE VALVE (NORMALLY OPEN)
- SELF-REGULATING PRESSURE CONTROL VALVE
- BACK PRESSURE CONTROL VALVE
- AIR-ACTUATED CONTROL VALVE
- SOLENOID-OPERATED 2-WAY VALVE
- SOLENOID-OPERATED 3-WAY VALVE WITH COMMON PORT
- MANUALLY OPERATED CONTROL VALVE
- DIAPHRAGM OPERATED CONTROL VALVE
- BUTTERFLY VALVE

4. INSTRUMENT SYMBOLS

5. INSTRUMENT AND VALVE NUMBERING SYSTEM

6. ACCESSORIES

- SCREWED CAP
- VENT TO ATMOSPHERE
- DRAIN
- Y-STRAINER
- STEAM TRAP
- QUICK CONNECT/ DISCONNECT
- REMOVABLE SPOOL
- FLEXIBLE CONNECTION
- CURRENT TO PNEUMATIC CONVERTER

7. LINES

- HEATED LINE
- PNEUMATIC SIGNAL
- LINE DESIGNATION SPLIT
- ELECTRICAL DISCRETE SIGNAL
- ELECTRICAL ANALOG SIGNAL
- LINE CLASS SPLIT

8. REFERENCE DESIGNATORS FOR INSTRUMENT OR VALVE SYMBOLS

	FIRST LETTER: MEASURED OR INITIATING VARIABLE	MODIFIER	SUCCEEDING LETTERS: READOUT OR PASSIVE FUNCTION	OUTPUT FUNCTION	MODIFIER
A	ANALYTICAL				
B					
C	CHECK			CONTROL OR CONTROL CENTER (CC)	SP (SETPOINT) RO (REMOTE OUTPUT)
D	DIFFERENTIAL				
E	ENCLOSURE		ELEMENT (PRIMARY)	pH (pH), CONDUCTIVITY (COND.), MASS (Kg)	
F	FLOW				
G	FLANGE (COOLED)				
H	HAND (MANUALLY INITIATED)		HIGH		
I	CURRENT		INDICATE		
J	POWER	SCAN			
K					
L	LEVEL / LOAD	CELL	LOW		
M	MOTOR				
N					
O					
P	PRESSURE OR VACUUM		PRESSURE	PNEUMATIC	
Q					
R	REACTOR		REDUCER		
S	SOLENOID		SAFETY	SWITCH	
T	TEMPERATURE		TRANSMITTER		
U					
V			VALVE		
W					
X	EXCESS FLOW				
Y					
Z	POSITION				

1. TAG NUMBERS FOR SOLENOID VALVES CORRESPOND TO TAG NUMBERS FOR ASSOCIATED FLOW VALVES. I.E. SV-XYZ ACTUATES FV-XYZ (CONNECTIONS OMITTED FOR CLARITY)
2. ALL SOLENOID VALVES ON AIR LINES FAIL TO VENT.
3. INSTRUMENT SYMBOLS AND NOMENCLATURE PER ISA S5.1.
4. DEFINITION OF PROCESS LINE NUMBER IS:
   WX-YYY-ZZ. WHERE:
   - W = LINE MATERIAL
     - A = STAINLESS STEEL TUBING
     - B = STAINLESS STEEL PIPE
     - C = STAINLESS STEEL DUCT
     - D = CARBON STEEL
     - E = PVC PIPE
     - F = FLEX POLYPROPYLENE OR NYLON TUBING
     - G = COPPER TUBING
   - X = LINE RATING
     REFER TO DOCUMENT 599C05
   - YYY = LINE NUMBER DESIGNATION
   - ZZ = PIPE SIZE, METAL TUBE OD, OR FLEXIBLE TUBE ID
5. EQUIPMENT DESIGNATORS ARE:
   - BFP-BACK FLOW PREVENTER
   - BV-BUTTERFLY VALVE
   - C-COMPRESSOR
   - CT-AIR FLUID COOLER SYSTEM
   - F-FILTER
   - FN-FAN
   - H-HEATER
   - HX-HEAT EXCHANGER
   - M-MOTOR
   - MA-AIR MOTOR
   - MCC-MOTOR CONTROL
   - MPS-METAL PARTS SEPARATOR
   - MX-MIXER
   - P-PUMP
   - PAS- POLLUTION ABATEMENT SYSTEM
   - PD-PULSATION DAMPENER
   - PR-ORIFICE OR CAPILLARY TUBE
   - R-REACTOR
   - S-GAS/LIQUID SEPARATOR
   - SC-SCRUBBER
   - SEP-SEPARATOR
   - ST-STRAINER/STEAM TRAP
   - TK-TANK
   - VSD-VARIABLE SPEED DRIVE
6. VALVE DESIGNATORS ARE:
   - FCV-FLOW CONTROL VALVE
   - FV-FLOW VALVE
   - HV-HAND VALVE
   - HCV-HAND FLOW CONTROL VALVE
   - PCV-PRESSURE CONTROL VALVE
   - PSV-PRESSURE SAFETY VALVE
   - SV-SOLENOID VALVE
   - CV-CHECK VALVE
   - XV-EXCESS FLOW VALVE
7. VALVE IDENTIFICATION:
   - FO = FAIL OPEN
   - FC = FAIL CLOSED
   - FAI = FAIL AS IS
8. ALL VALVES SHOWN IN "NORMAL" OPERATING CONDITION.

PROFESSIONAL ENGINEER No. 6895711-2202 DONALD FANNING 9/2/08 STATE OF UTAH

PART DASH NO.	NEXT ASSY	USED ON
-1	59C002	
	APPLICATION	

☒ GA PROPRIETARY INFORMATION
THIS DOCUMENT IS THE PROPERTY OF GENERAL ATOMICS (GA). ANY TRANSMITTAL OF THIS DOCUMENT OUTSIDE GA WILL BE MADE ONLY UNDER GA WRITTEN CONSENT OF GA. (1) THIS DOCUMENT MAY NOT BE COPIED IN WHOLE OR IN PART AND WILL BE RETURNED UPON REQUEST OR WHEN NO LONGER NEEDED BY RECIPIENT AND (2) INFORMATION CONTAINED HEREIN MAY NOT BE COMMUNICATED TO OTHERS AND MAY BE USED BY RECIPIENT ONLY FOR THE PURPOSE FOR WHICH IT WAS TRANSMITTED.
☐ NO GA PROPRIETARY INFORMATION

PROJECT 30159 | SYSTEM N/A | APPVL 5 | ECO/SC N/A | DISC 0 | ECR N/A | TYPE P&ID | ELEC N/A | ☐ B&O ☐ IN B.S. ☒ DESIGN

UNLESS OTHERWISE SPECIFIED DIMENSIONS ARE IN INCHES. NO BURRS OR SHARP EDGES. DIMENSIONS PER ASME Y14.5M
TOLERANCES:
FRACTIONS ± -- DECIMALS .X ± -- .XX ± -- .XXX ± -- ANGLES ± --
ALL MACHINED SURFACES
CALC WT --
CAL

GENERAL ATOMICS SAN DIEGO, CALIFORNIA

TITLE: CAD HPPP PIPING & INSTRUMENTATION DIAGRAM

SIZE C | CAGE CODE 4V360 | DWG NO 59C003 | REV D | SCALE NONE | SHEET 1 OF 3

CAD FILE	DATE / TIME
59C003D2.DWG	08/14/2008

REVISIONS

REV	DATE	ZONE	DESCRIPTION	DR	CHK	ENG	APPD	APPD	QA	APPD
A	03/27/2013		REMOVED CHILLER AND COMPONENTS	TT						

NOTES:

1. LOW POINT DRAIN
2. SECONDARY CONTAINMENT TANK
3. TANK HEATING SYSTEM: THREE PARALLEL COILS
4. BLDG. 1400 UTILITY WATER SHUT OFF VALVE
5. PRESSURE ISOLATION VALVES
6. CHILLER TO BE REMOVED.

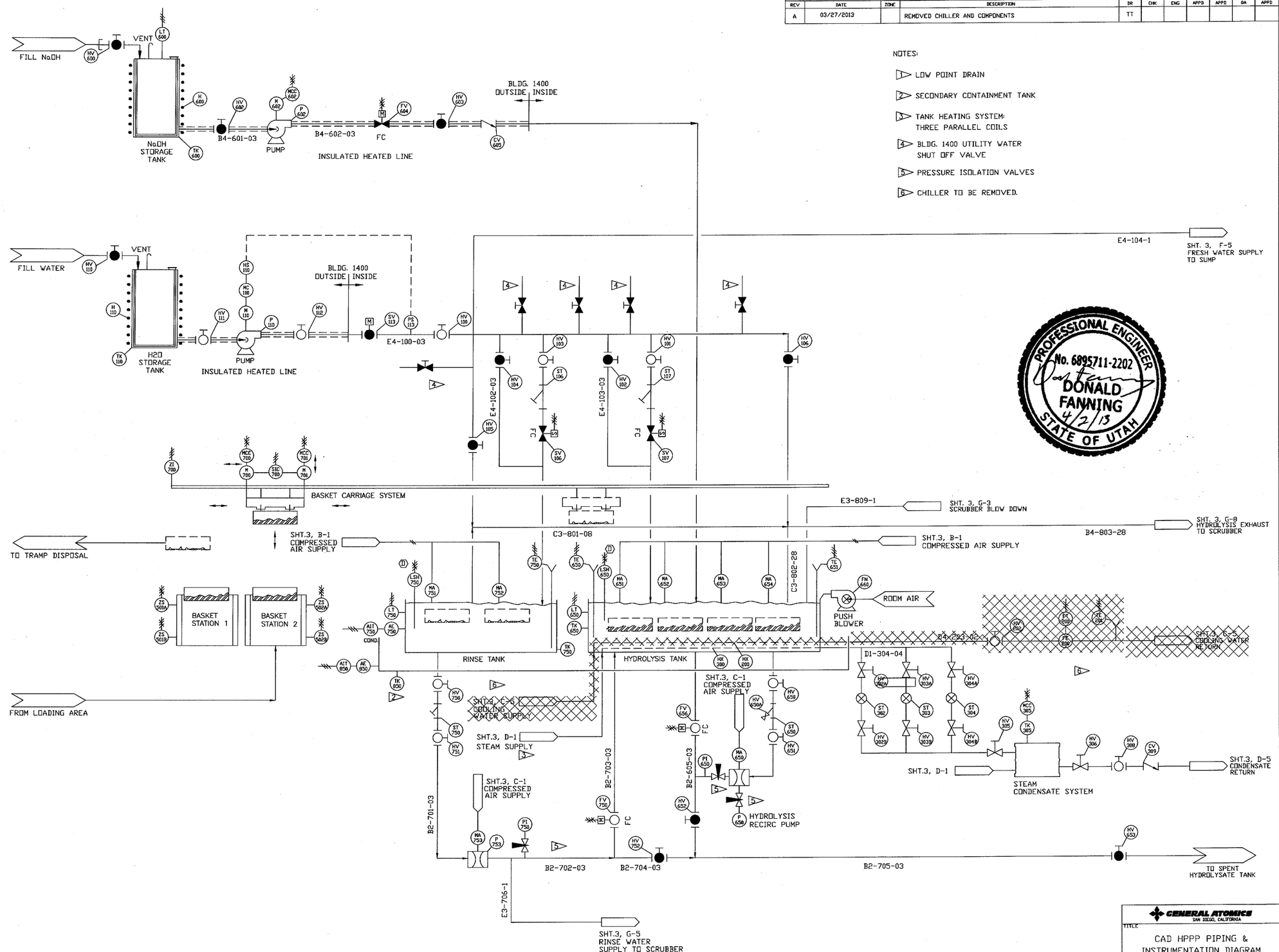

PROFESSIONAL ENGINEER
No. 6895711-2202
DONALD FANNING
4/2/13
STATE OF UTAH

GENERAL ATOMICS
SAN DIEGO, CALIFORNIA

TITLE: CAD HPPP PIPING & INSTRUMENTATION DIAGRAM

SIZE	CAGE CODE	DWG NO	REV
C	4V360	59C003	D
SCALE NONE		SHEET 2 OF 3	

CAD FILE 59C0003D3.DWG | DATE / TIME 08/14/2008

REV	DATE	ZONE	DESCRIPTION	DR	CHK	ENG	APPD	APPD	QA	APPD
A	03/28/2013		CHILLER TO BE REMOVED, BOILER SPECIFICATION REVISED	TT						

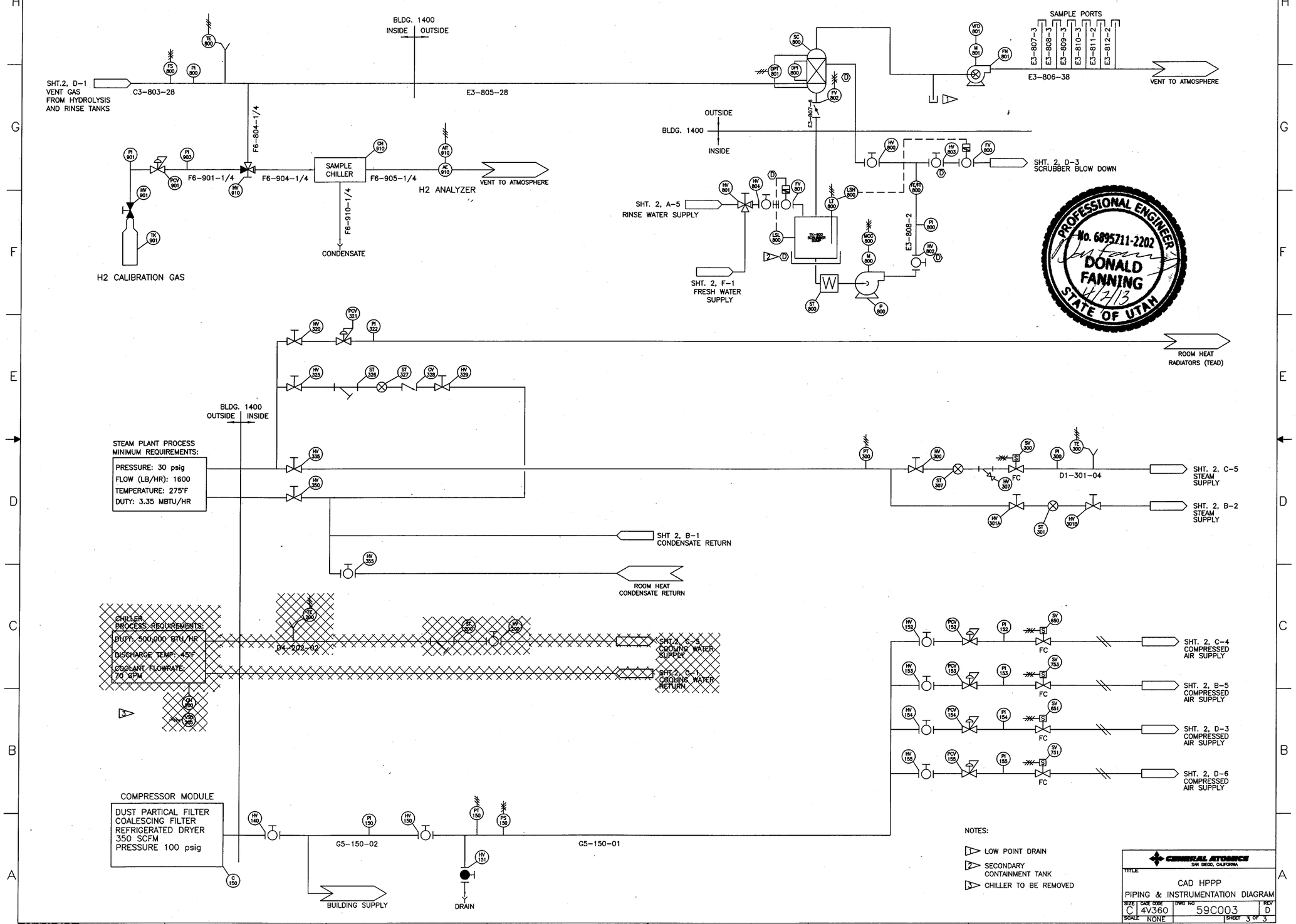

GENERAL ATOMICS
SAN DIEGO, CALIFORNIA

TITLE
CAD HPPP
PIPING & INSTRUMENTATION DIAGRAM

SIZE	CADE CODE	DWG NO	REV
C	4V360	59C003	D
SCALE NONE		SHEET 3 OF 3	

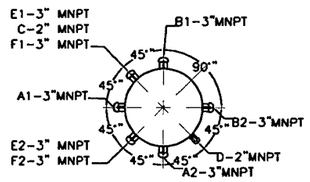

TESTPORT CONFIGURATION

NOTES:

-SCRUBBER MODEL SVS 25,000 ACFM (VERTICAL COUNTERFLOW DESIGN)
-½" TYPE II WHITE PVC CONSTRUCTION
-DESIGNED FOR 500 FPM FACE VELOCITY AT 25,000 ACFM
-OPERATING FLOWRATE BETWEEN 18,000-21,000 ACFM
-3' OF 3.5" "JAEGER" POLYPROPYLENE RANDOM DUMP PACK
-"KIMRE" POLYPROPYLENE COMPOSITE MESH PAD MIST ELIMINATOR
  -Removes mist particles as small as 2-4 microns in diameter
  -99.3% efficiency
  -(3) Total - Each aprox. 3' X 6'4"
-(12) "BETE FOG" 9.5 GPM SPRAY NOZZLES
  -Minimum pressure 10 psi
-(2) MAGNEHELIC AIR PRESSURE DIFFERENTIAL METERS
  -Monitors the pressure drop across the mist eliminator
  -Monitors the pressure drop across the overall scrubber
  -Overall meter will transmit to a digital indicator on the control panel

-PLUMBING
  -2"ø Sch. 80 PVC supply
  -(4) 1 ½"ø removable spray headers
  -6"ø Sch. 40 PVC drain

-SUMP
  -"Serfilco" Vertical Recirculation Pump (max pressure-34 psi)
  -Electronic Level Switch
  -"Signet" Magnetic Flow Meter
  -Pressure Gauge
  -Sump Level Transmitter
  -Sump Water Make-up Valve

-OPERATING WEIGHT - 1,750 LBS.

-PRESSURE DROP (CLEAN) @25,000 ACFM
  -Mist eliminator - .8"wg
  -Scrubber pack - 1.0wg

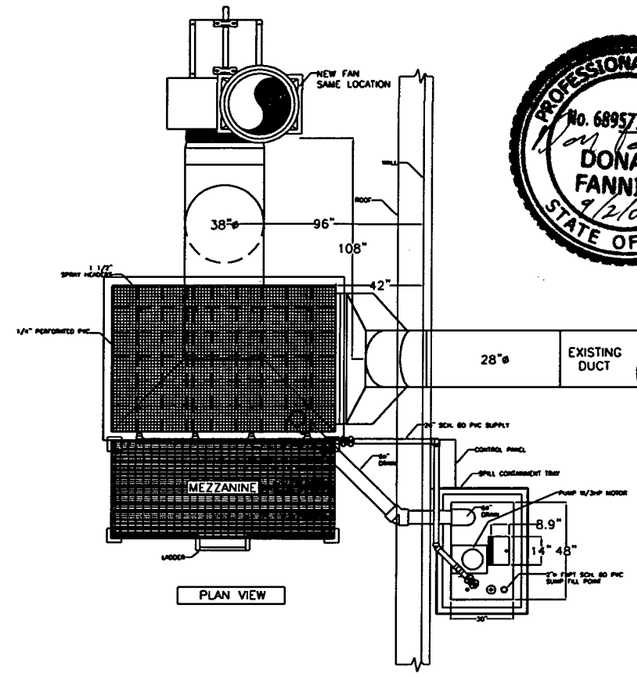

PROFESSIONAL ENGINEER
No. 6895711-2202
DONALD FANNING
9/2/08
STATE OF UTAH

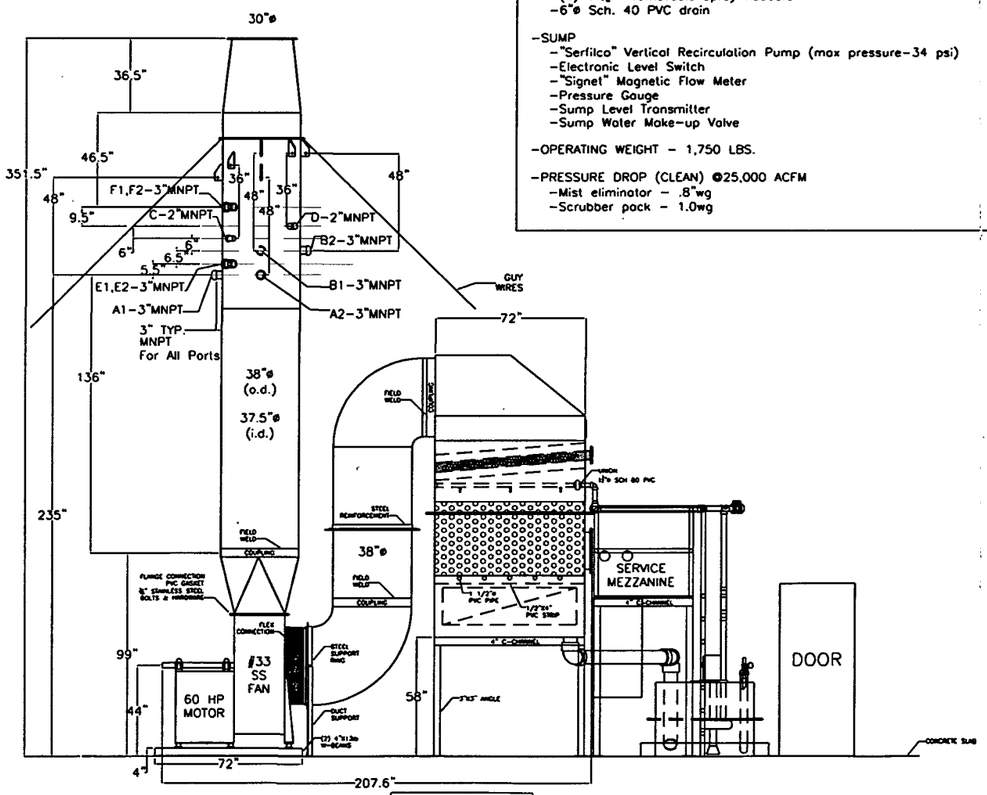

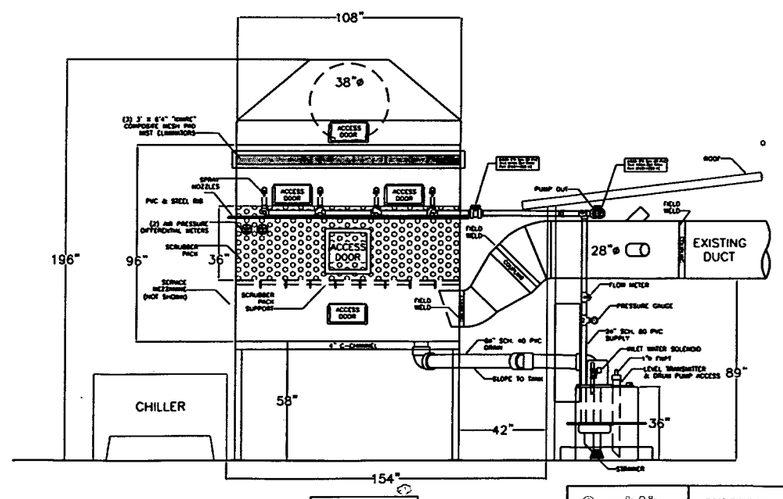

ScrubAir
Scrubber Systems, Inc.
1250 Rose Road
Lake Zurich, IL 60047

CONFIDENTIAL

This drawing is and shall remain the property of Scrubber Vent Systems, Inc and shall not be shown to anyone or copied, reproduced or disclosed in any manner whatsoever without written authorization by Scrubber Vent Systems, Inc. Disclosure of this document is governed by applicable Nondisclosure Agreements and Sales, Service, or other contracts.

MACHINE TOLERANCES UNLESS OTHERWISE SPECIFIED

15,000 - 25,000 CFM ALKALINE SCRUBBING SYSTEM

Tract wt. ____ LBS			
Drawn By	SIZE D	P.O. NO	DWG NO GA041508	REV A
Checked By	SCALE	GENERAL ATOMICS	SHEET 1 OF 1 SHEETS

CAD FILE	DATE
TOOELE BLDG 1400 LAYOUT	04/10/2008

NOTES:

1. DIMENSIONS ARE IN INCHES, UNLESS OTHERWISE SPECIFIED.

2. CHILLER TO BE REMOVED.

REVISIONS										
REV	DATE	ZONE	DESCRIPTION	DR	CHK	ENG	APPD	APPD	QA	APPD
1			INITIAL RELEASE (A30159-0850)							
2	03/27/2013		REMOVED CHILLER. ADDED HOOD.	TT						

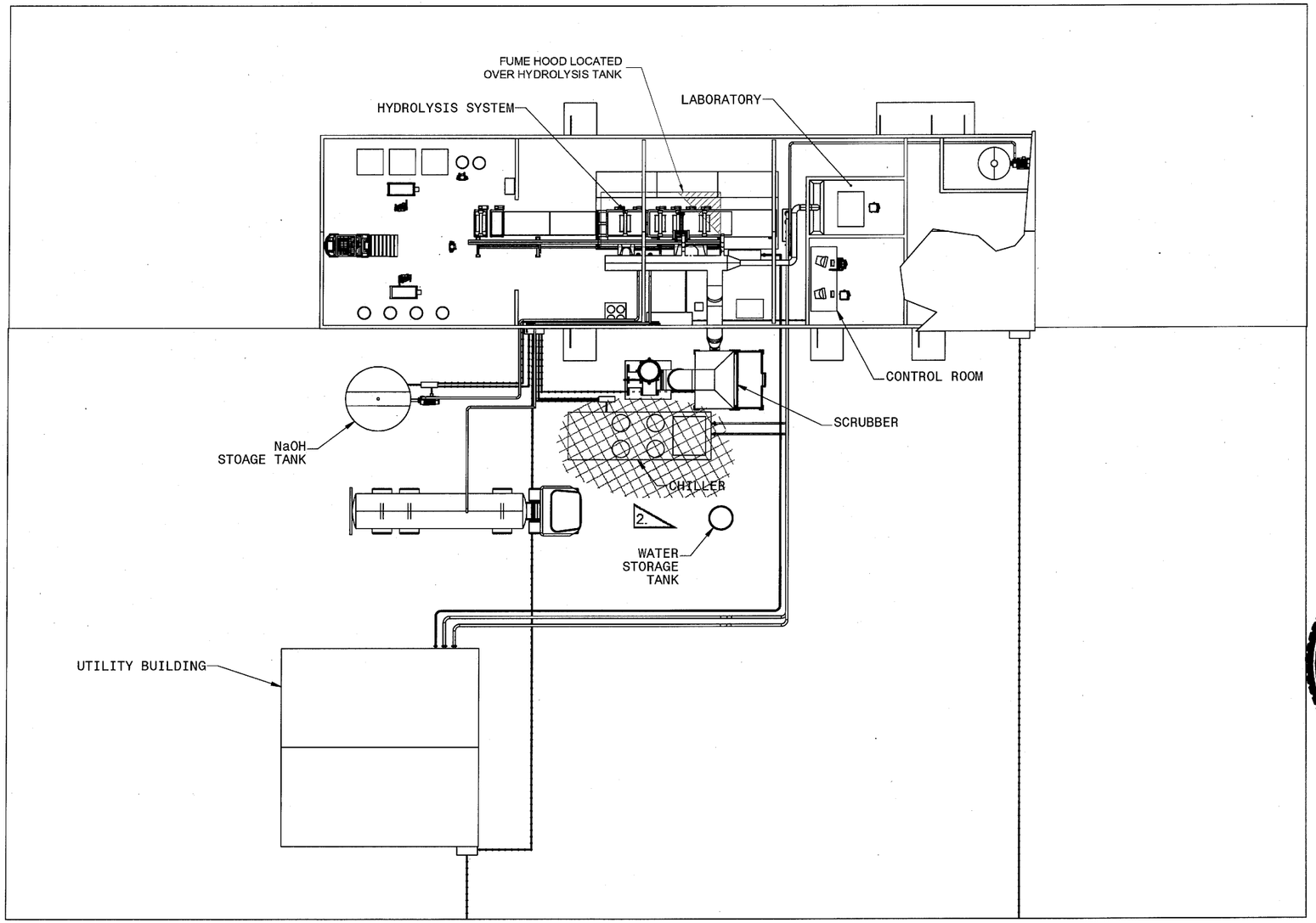

PROFESSIONAL ENGINEER
No. 6895711-2202
DONALD FANNING
4/2/13
STATE OF UTAH

1	XXXXXDXXXXXY	
PART ITEM NO	NEXT ASSY	USED ON
	APPLICATION	

☒ GA PROPRIETARY INFORMATION

THIS DOCUMENT IS THE PROPERTY OF GENERAL ATOMICS (GA). ANY TRANSMITTAL OF THIS DOCUMENT OUTSIDE GA WILL BE IN CONFIDENCE. EXCEPT WITH THE WRITTEN CONSENT OF GA, (1) THIS DOCUMENT MAY NOT BE COPIED IN WHOLE OR IN PART AND WILL BE RETURNED UPON REQUEST OR WHEN NO LONGER NEEDED BY RECIPIENT AND (2) THE INFORMATION CONTAINED HEREIN WILL NOT BE COMMUNICATED TO OTHERS AND MAY NOT BE USED BY RECIPIENT ONLY FOR THE PURPOSE FOR WHICH IT WAS TRANSMITTED.

☐ NO GA PROPRIETARY INFORMATION

PROJECT	
A30159	
SYSTEM	
XX	
APPVL 2	EC/SC N/A
DISC M	SEIS N/A
TYPE ED	ELEC N/A

☐ R&D ☐ DV&S ☒ DESIGN

UNLESS OTHERWISE SPECIFIED DIMENSIONS ARE IN INCHES. NO BURRS OR SHARP EDGES. DIMENSIONS PER ASME Y14.5M

TOLERANCES:
FRACTIONS ± 1/16" DECIMALS .X ±.030 .XX ±.010 .XXX ±.005 ANGLES ±1/4°

ALL MACHINED SURFACES 125√

CALC WT 3590585

QAL II

GENERAL ATOMICS

TITLE TOOELE BLDG 1400 EQUIPMENT LAYOUT PLAN

SIZE	CAGE CODE	DWG NO	REV
C	4V360	30159D00000	1
SCALE 1:1		SHEET 1 OF 4	

FORMAT GA 2870-C (APR 2008)

CAD FILE	DATE
TOOELE BLDG 1400 LAYOUT	04/10/2008

REVISIONS

REV	DATE	ZONE	DESCRIPTION	DR	CHK	ENG	APPD	APPD	QA	APPD
1	03/27/2013		REMOVED CHILLER. ADDED HOOD.	TT						

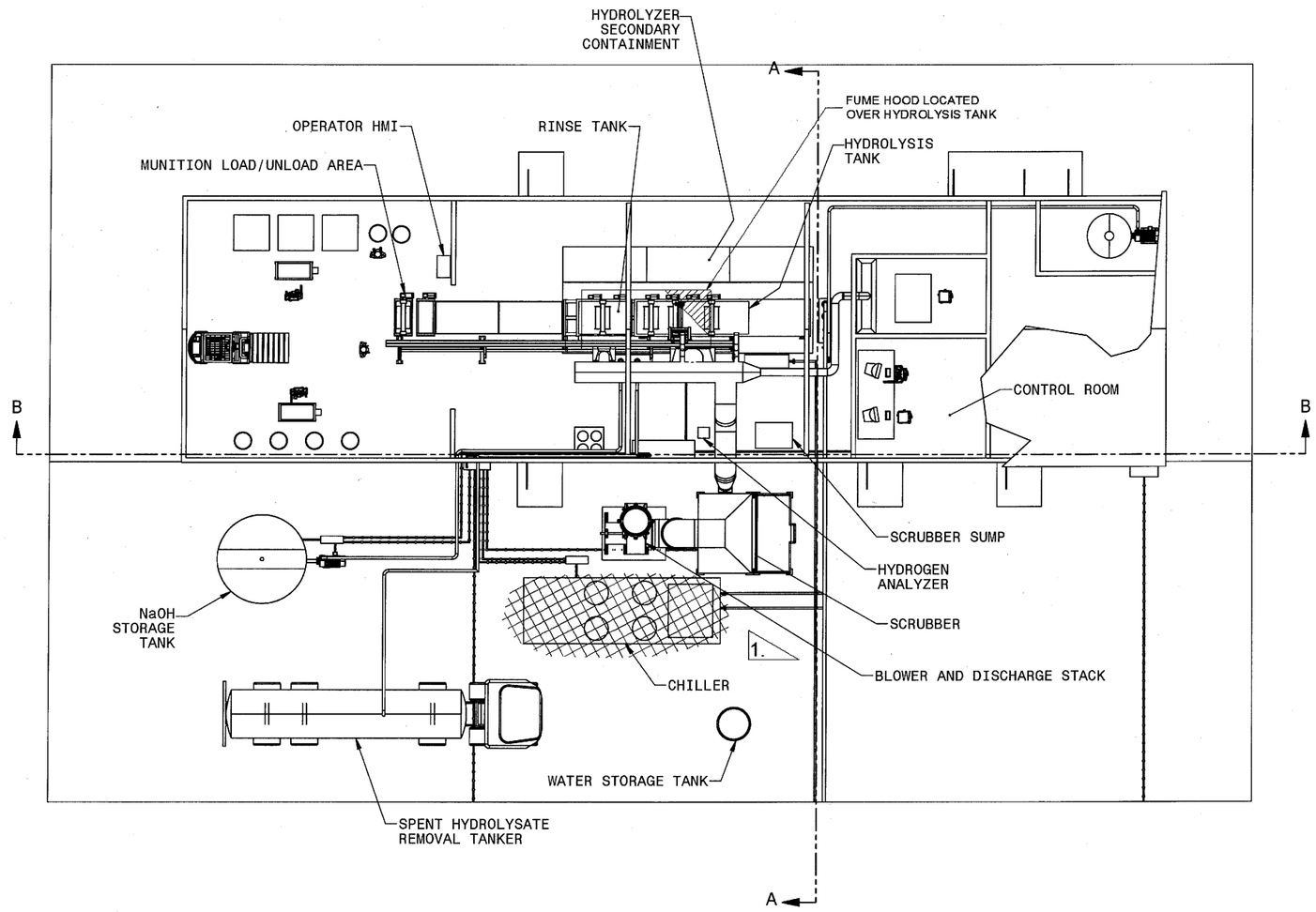

PROFESSIONAL ENGINEER
No. 6895711-2202
DONALD FANNING
4/2/13
STATE OF UTAH

NOTES:
1. CHILLER TO BE REMOVED

TITLE			
TOOELE BLDG 1400 EQUIPMENT LAYOUT PLAN			
SIZE C	CAGE CODE 4V360	DWG NO 30159D00000	REV 1
SCALE 1:1			SHEET 2 OF 4

CAD FILE	DATE
TOOELE BLDG 1400 LAYOUT	04/10/2008

REVISIONS

REV	DATE	ZONE	DESCRIPTION	DR	CHK	ENG	APPD	APPD	QA	APPD
1	03/27/2013		REMOVED CHILLER. ADDED HOOD.	TT						

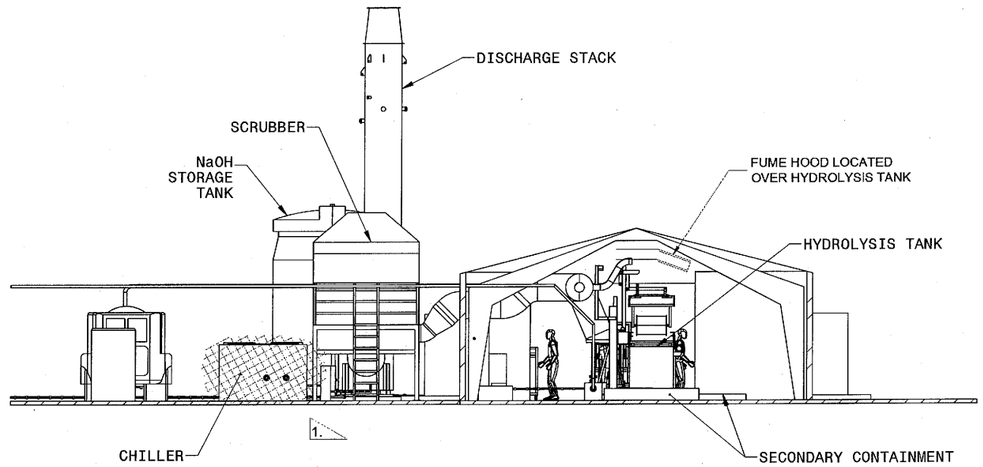

SECTION A-A
1 : 96

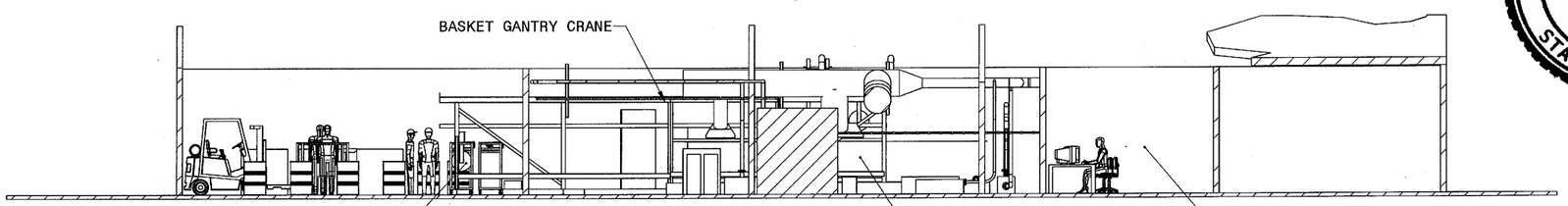

SECTION B-B
1 : 96

PROFESSIONAL ENGINEER
No. 6895711-2202
DONALD FANNING
4/2/13
STATE OF UTAH

NOTES:

1. CHILLER TO BE REMOVED.

GENERAL ATOMICS

TITLE			
TOOELE BLDG 1400 EQUIPMENT LAYOUT ELEVATIONS			
SIZE C	CAGE CODE 4V360	DWG NO 30159D00000	REV 1
SCALE 1:1		SHEET 3 OF 4	

CAD FILE	DATE
TOOELE BLDG 1400 LAYOUT	04/10/2008

REVISIONS

REV	DATE	ZONE	DESCRIPTION	DR	CHK	ENG	APPD	APPD	QA	APPD
1	03/27/2013		REMOVED CHILLER, ADDED HOOD.	TT						

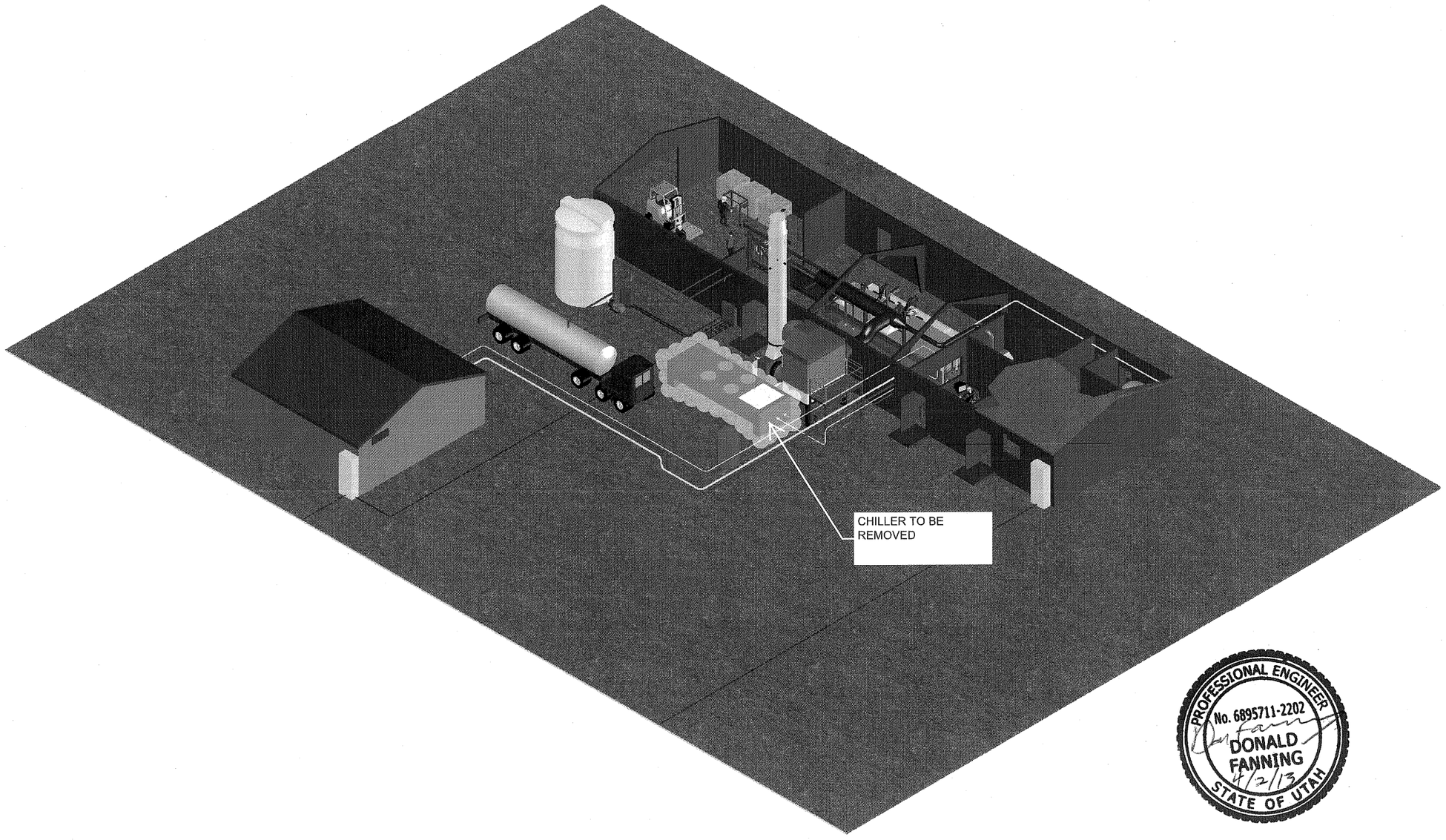

PROFESSIONAL ENGINEER
No. 6895711-2202
DONALD FANNING
4/2/13
STATE OF UTAH

TITLE			
TOOELE BLDG 1400 EQUIPMENT LAYOUT ISOMETRIC			
SIZE C	CAGE CODE 4V360	DWG NO 30159D00000	REV 1
SCALE 1:1		SHEET 4 OF 4	

REVISIONS			
Sym.	Description	Date	Name
A	REMOVE CHILLER AND COOLING LINES	4/2/13	DF

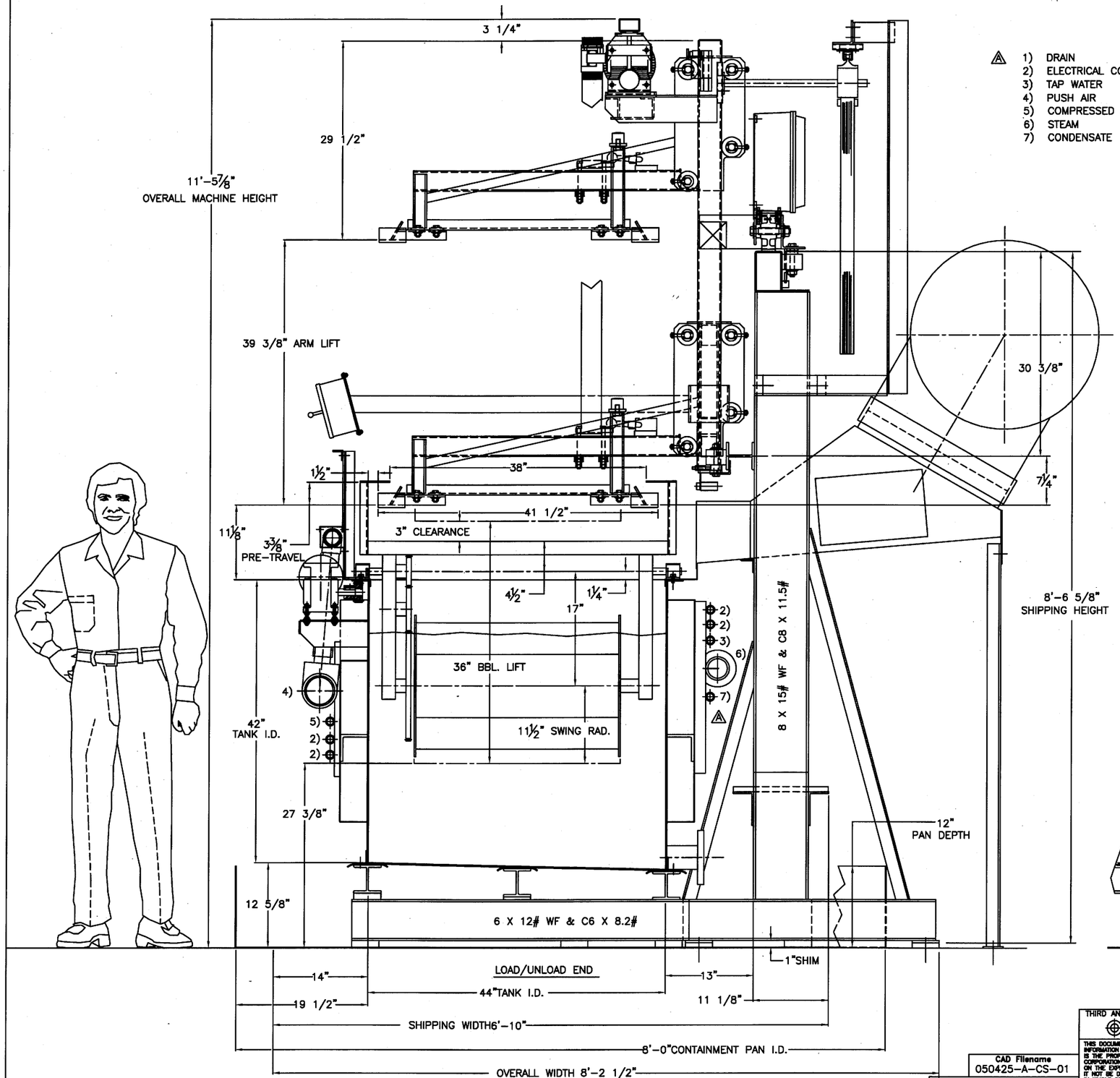

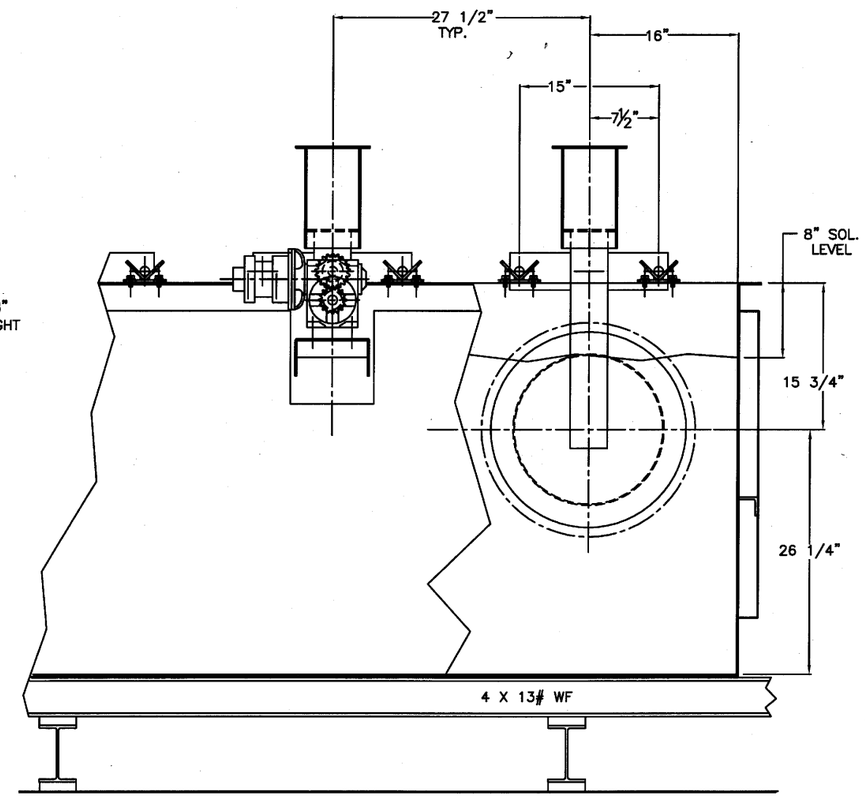

TYPICAL SIDE VIEW

PROFESSIONAL ENGINEER
No. 6895711-2202
DONALD FANNING
4/2/13
STATE OF UTAH

CAD Filename
050425-A-CS-01

SUPPLIER DWG:
SUPPLIER NAME:

THIRD ANGLE PROJECTION

THIS DOCUMENT, INCLUDING THE INFORMATION CONTAINED HEREIN, IS THE PROPERTY OF "IPT" CORPORATION AND IS DELIVERED ON THE EXPRESS CONDITION THAT IT NOT BE DISCLOSED, REPRODUCED IN WHOLE OR IN PART OR USED FOR MANUFACTURE WITHOUT THE WRITTEN CONSENT OF "IPT" CORPORATION.

UNLESS OTHERWISE SPECIFIED
TOLERANCES
.XX = ±.010 FRACTIONS = ±1/64
.XXX= ±.005 ANGLES = 0'-30'
BREAK SHARP EDGES .005-.020
FILLET RADII .005-.020
DIMENSIONS ARE IN INCHES
DO NOT SCALE DWG.

MATERIAL
FINISH

	NAME	DATE
DRN		
DESG	L. MARON	2/22/05
CHK		
APPR		
CAD SCALE = 16		
MODEL		

INTERNATIONAL PLATING TECHNOLOGY

TITLE CROSS SECTION
GENERAL ATOMICS

DWG. NO. 050425-A-CS-01 REV.

SCALE: 3/4"=1'-0" SHEET 1 OF 1

REVISIONS			
Sym.	Description	Name	Date

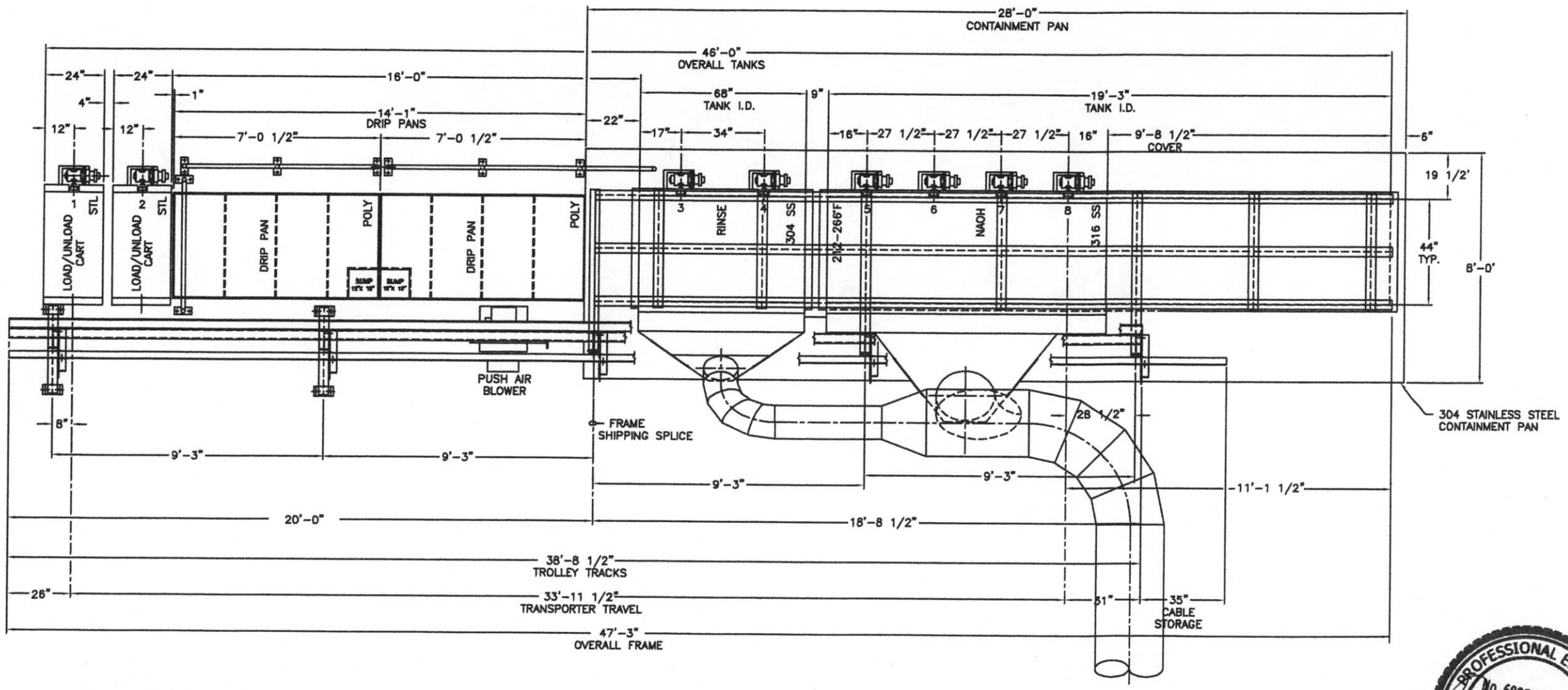

NOTES:

(1) SIDEARM TRANSPORTER REQUIRED.
TRANSPORTER CAPACITY: 500 LBS.
HEAT SOURCE: 70 PSIG STEAM
HEAT-UP TIME: (1) HOUR
ELECTRICAL: 480V/3ø/60Hz 30 AMPS

PRODUCTION INFORMATION:

APPROX. (1.3) BARRELS PER HOUR
NUMBER OF BARRELS: (9)
BARREL VOLUME: 3.5 CUBIC FEET
CYCLE: 1 OR 2, (5 OR 6 OR 7 OR 8), (4 OR 3), 1 OR 2

PROFESSIONAL ENGINEER
No. 6895711-2202
DONALD FANNING
7/15/05
STATE OF UTAH

THIRD ANGLE PROJECTION	UNLESS OTHERWISE SPECIFIED		NAME	DATE
THIS DOCUMENT, INCLUDING THE INFORMATION CONTAINED HEREIN IS THE PROPERTY OF "IPT" CORPORATION AND IS DELIVERED ON THE EXPRESS CONDITION THAT IT MAY BE DISCLOSED, REPRODUCED IN WHOLE OR PART OR USED FOR MANUFACTURE WITHOUT THE WRITTEN CONSENT OF "IPT" CORPORATION.	TOLERANCES .XX = ±.010 FRACTIONS = ±1/64 .XXX = .005 ANGLES = 0°-30' BREAK SHARP EDGES .005-.020 FILLET RADII .005-.020 DIMENSIONS ARE IN INCHES	DRAWN:	L.MARON	2/22/05
		DES:	.	.
		CHECK:	.	.
	DO NOT SCALE DRAWING	APPR:	.	.
	MATERIAL: .	CAD SCALE: 48		
	FINISH: .	MODEL: .		

CAD FILENAME	050425-B-TL-01
SUPPLIER DWG: .	
SUPPLIER NAME: .	

INTERNATIONAL PLATING TECHNOLOGY

TITLE: TANKLINE LAYOUT
GENERAL ATOMICS

DWG. NO. 050425-B-TL-01 REV.

SCALE: 1/4"=1'-0" SHEET 1 OF 1

REVISIONS			
Sym.	Description	Name	Date
A	CHILLER TO BE REMOVED	TT	03/28/2013

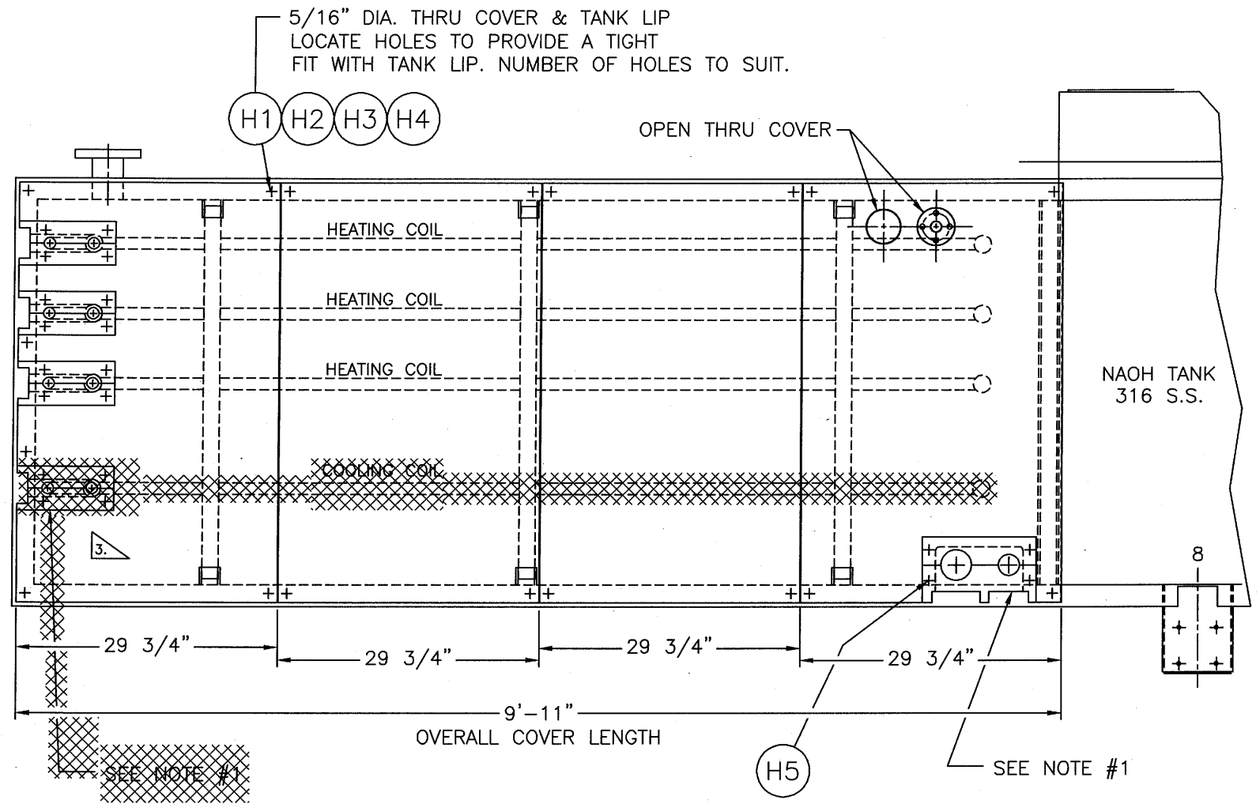

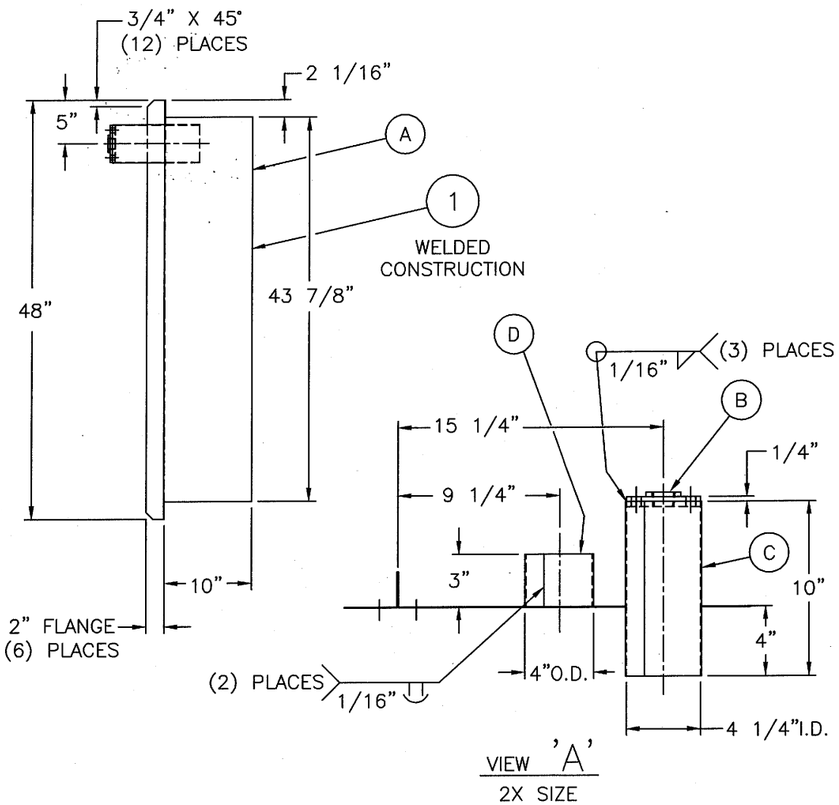

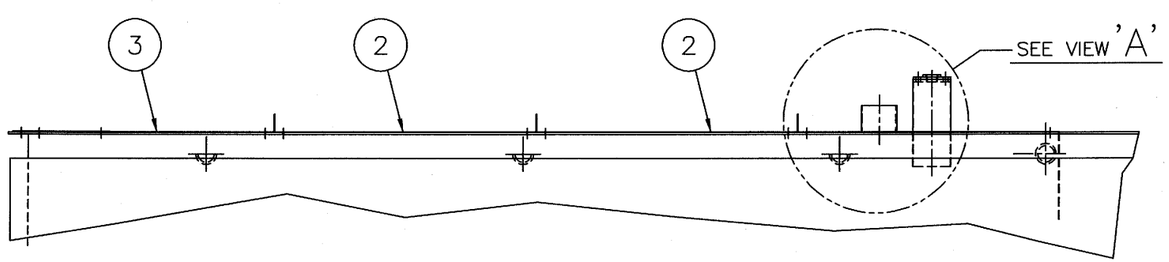

PROFESSIONAL ENGINEER
No. 6895711-2202
DONALD FANNING
4/2/13
STATE OF UTAH

ALL HARDWARE QUANTITIES ARE AS REQUIRED
QUANTITIES SHOWN ARE TOTAL MACHINE QUANTITIES

ITEM	SYM.	QTY.	DISCRIPTION
H5	—	—	#8 x 1/2" LG. HEX HD. SHT. METAL SCR. – STN. STL. McMASTER–CARR #92650A155 (OR EQUIV.)
H4	—	—	1/4"–20 x 3/4" LG. HEX HD BOLT – 316 STN. STL.
H3	—	—	1/4" LOCK WASHER – 316 STN. STL.
H2	—	—	1/4" FLAT WASHER – 316 STN. STL.
H1	—	—	1/4–20 HEX NUT – 316 STN. STL.
3	—	1	#18 GAGE (.048) x 48"x 31 11/16" DEV. WIDTH–304 STN.STL.
2	—	2	#18 GAGE (.048) x 48"x 33 5/8" DEV. WIDTH–304 STN.STL.
1	D	1	#18 GAGE (.048) x 3"x 12 5/16" DEV. LENGTH–304 STN.STL.
	C	1	#18 GAGE (.048) x 10"x 13 7/16" DEV. LENGTH–304 STN.STL.
	B	1	1" THD'D FLANGE, 304 S.S.– McMASTER–CARR #44685K13 (OR EQUIV.)
	A	1	#18 GAGE (.048) x 48"x 41 5/8" DEV. WIDTH–304 STN.STL.

NOTES:

1) CUT–OUT COVER TO CLEAR PIPES & PIPE MOUNTING CLAMPS. FABRICATE SPLIT PIPE COLLARS FROM 18 GAGE 304 STN. STL. ALLOW A MAX. OF 1/8" GAP BETWEEN COLLARS & PIPES. MOUNT COLLARS TO COVERS WITH SHEET METAL SCREWS ITEM #5. LOCATION & SIZE OF COLLARS TO SUIT.

2) STAINLESS STEEL COMPONENTS SHALL CONFORM TO ASTM SPECIFICATIONS. MATERIAL TO BE FLAT & FREE OF BUCKLING.

3. CHILLER TO BE REMOVED.

THIRD ANGLE PROJECTION

THIS DOCUMENT, INCLUDING THE INFORMATION CONTAINED HEREIN IS THE PROPERTY OF "IPT" CORPORATION AND IS DELIVERED ON THE EXPRESS CONDITION THAT IT NOT BE DISCLOSED, REPRODUCED IN WHOLE OR PART OR USED FOR MANUFACTURE WITHOUT THE WRITTEN CONSENT OF "IPT" CORPORATION.

UNLESS OTHERWISE SPECIFIED
TOLERANCES
.XX = ±.010 FRACTIONS = ±1/64
.XXX = .005 ANGLES = 0°–30'
BREAK SHARP EDGES .005–.020
FILLET RADII .005–.020
DIMENSIONS ARE IN INCHES
DO NOT SCALE DRAWING

	NAME	DATE
DRAWN:	L.MARON	3/23/05
DES:	.	.
CHECK:		
APPR:	.	.

MATERIAL: .
FINISH: .
CAD SCALE: 24
MODEL: .

CAD FILENAME 050425–C–TC–01
SUPPLER DWG: .
SUPPLER NAME: .

INTERNATIONAL PLATING TECHNOLOGY

TITLE: NOAH TANK COVER
GENERAL ATOMICS

DWG. NO. 050425–C–TC–01 REV. .

SCALE: 1/2"=1'–0" SHEET 1 OF 1

REVISIONS			
Sym.	Description	Name	Date

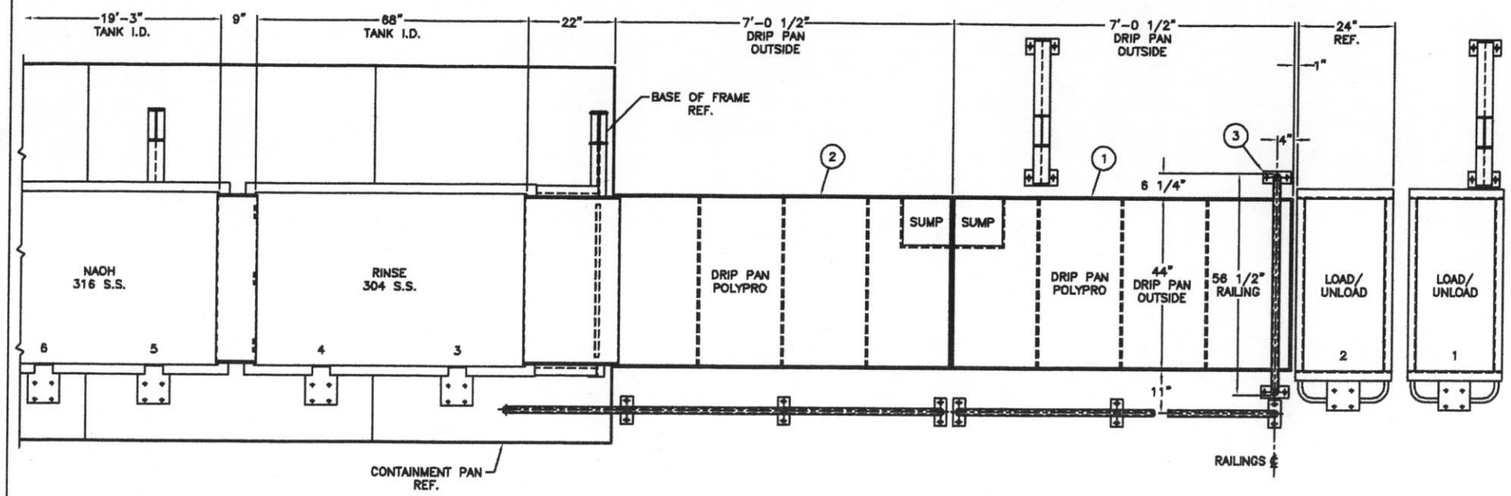

PROFESSIONAL ENGINEER
No. 6895711-2202
DONALD FANNING
7/15/05
STATE OF UTAH

QUANTITY SHOWN ARE TOTAL REQUIRED.

ITEM	QTY.	SHT.	DESCRIPTION
H4	6		3/8"-16 HEX NUT, 316 S.S.
H3	6		3/8" LOCK WASHER, 316 S.S.
H2	12		3/8" FLAT WASHER, 316 S.S.
H1	6		3/8"-16 x 1 1/4" LG. HEX HEAD BOLT, 316 S.S.
8	1	4	NAOH DRIP SHIELD
7	1	4	RINSE DRIP SHIELD
6	1	3	RINSE DRIP SHIELD SUPPORT
5	1	3	RIGHT HAND RAILING
4	1	3	LEFT HAND RAILING
3	1	3	LOAD SIDE RAILING
2	1	2	RIGHT HAND DRIP PAN
1	1	2	LEFT HAND DRIP PAN

NOTES:

1) HARDWARE SHALL BE TORQUED TO SPECIFICATIONS FOUND ON 'IPT' STANDARD DRAWING NUMBER A-1.
2) BOLTED CONNECTIONS SHALL BE ASSEMBLED USING LOCTITE #242 COMPOUND OR EQUIVALENT.

THIRD ANGLE PROJECTION

THIS DOCUMENT, INCLUDING THE INFORMATION CONTAINED HEREIN IS THE PROPERTY OF "IPT" CORPORATION AND IS RELEASED ON THE EXPRESS CONDITION THAT IT NOT BE DISCLOSED, REPRODUCED IN WHOLE OR PART OR USED FOR MANUFACTURE WITHOUT THE WRITTEN CONSENT OF "IPT" CORPORATION.

UNLESS OTHERWISE SPECIFIED
TOLERANCES
.XX = ±.010 FRACTIONS = ±1/64
.XXX = .005 ANGLES = 0°-30'
BREAK SHARP EDGES .005-.020
FILLET RADII .005-.020
DIMENSIONS ARE IN INCHES
DO NOT SCALE DRAWING

MATERIAL: .
FINISH: .

	NAME	DATE
DRAWN:	VJT	2/22/01
DES:	.	.
CHECK:	L.MARON	2/26/01
APPR:	.	.
CAD SCALE: 32		
MODEL: .		

CAD FILENAME 050425-D-DP-01
SUPPLER DWG: .
SUPPLER NAME: .

INTERNATIONAL PLATING TECHNOLOGY

TITLE: DRIP PAN & SHIELDS ASS'Y GENERAL ATOMICS

DWG. NO. 050425-D-DP-01 REV. .

SCALE: 3/8"=1'-0" SHEET 1 OF 4

REVISIONS			
Sym.	Description	Name	Date

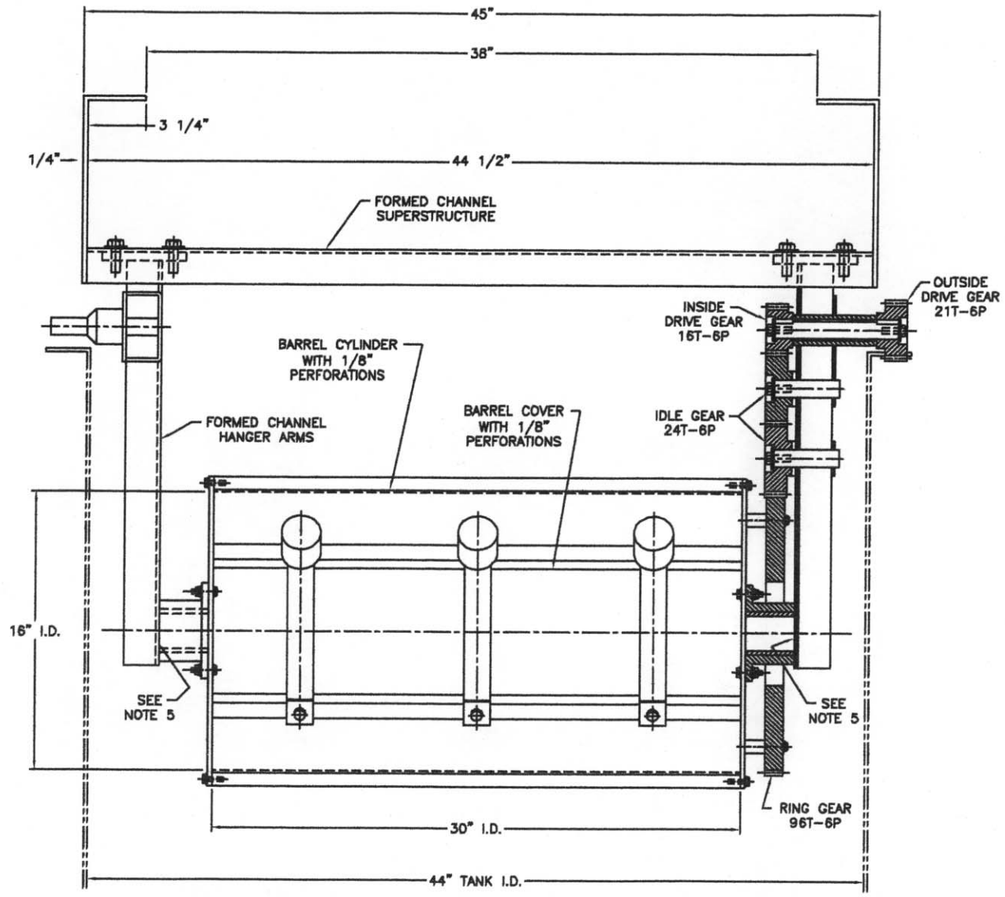

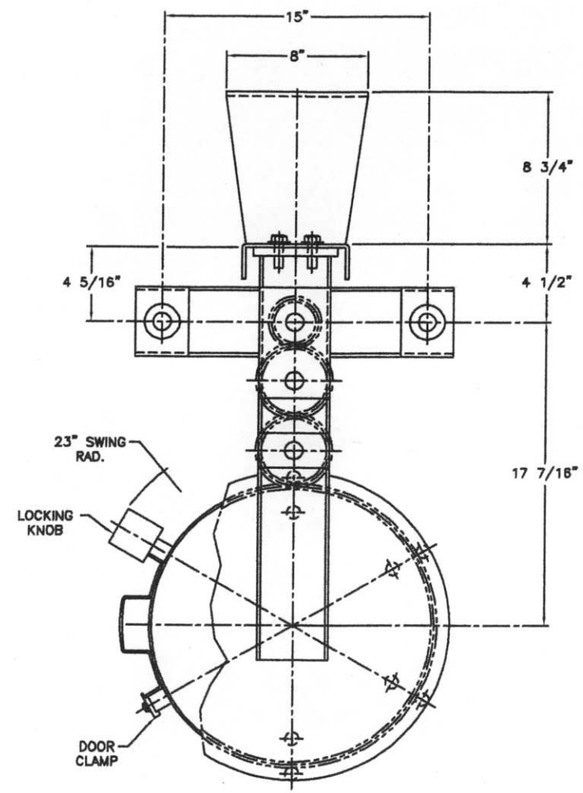

NOTES:

1) BARREL TO BE FABRICATED BY CORE PLATING TECHNOLOGY (9) BARRELS REQ'D.
2) BARREL, STRUCTURE & GEARS TO BE CONSTRUCTED OF 304 STAINLESS STEEL.
3) ALL HARDWARE TO BE 316 STAINLESS STEEL.
4) STAINLESS STEEL COMPONENTS SHALL CONFORM TO ASTM SPECIFICATIONS.
5) WELDS SHALL BE GROUND SMOOTH TO 125RMS MAXIMUM FINISH. WELDS WILL BE LIQUID PENETRANT INSPECTED WHERE INDICATED. NO LINEAR INDICATIONS, LAPS OR UNDERCUTS ARE ALLOWED. NO POROSITY OVER .020" ALLOWED. ASME SEC IX, CODE D1.1 FOR STEEL.

CAD FILENAME 050425-R-BL-01	THIRD ANGLE PROJECTION	UNLESS OTHERWISE SPECIFIED		NAME	DATE
SUPPLIER DWG: .	THIS DOCUMENT, INCLUDING THE INFORMATION CONTAINED HEREIN IS THE PROPERTY OF "PT" CORPORATION AND IS DELIVERED ON THE EXPRESS CONDITION THAT IT MAY NOT BE DISCLOSED, REPRODUCED IN WHOLE OR PART, OR USED FOR MANUFACTURE WITHOUT THE WRITTEN CONSENT OF "PT" CORPORATION.	TOLERANCES .XX = ±.010 FRACTIONS = ±1/64 .XXX = .005 ANGLES = 0°-30' BREAK SHARP EDGES .005-.020 FILLET RADII .005-.020 DIMENSIONS ARE IN INCHES	DRAWN:	VJT	3/11/05
SUPPLIER NAME: .			DES:	.	.
			CHECK:	.	.
		DO NOT SCALE DRAWING	APPR:	.	.
		MATERIAL: .	CAD SCALE: 8		
		FINISH: .	MODEL: .		

INTERNATIONAL PLATING TECHNOLOGY

TITLE: BARREL LAYOUT GENERAL ATOMICS

DWG. NO. 050425-R-BL-01 REV. .

SCALE: 1 1/2"=1'=0" SHEET 1 OF 1

REVISIONS			
Sym.	Description	Name	Date

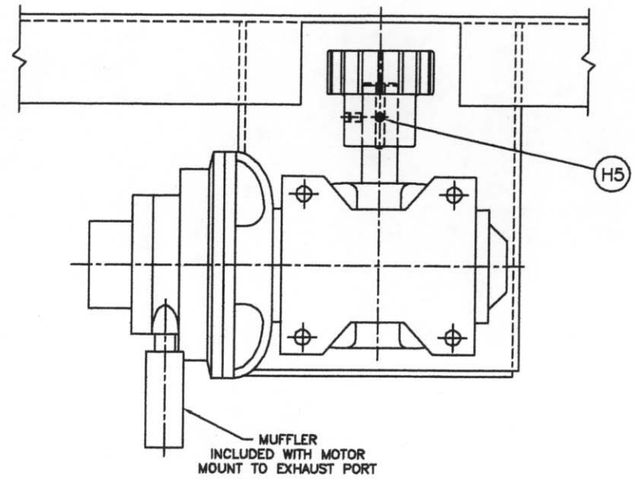

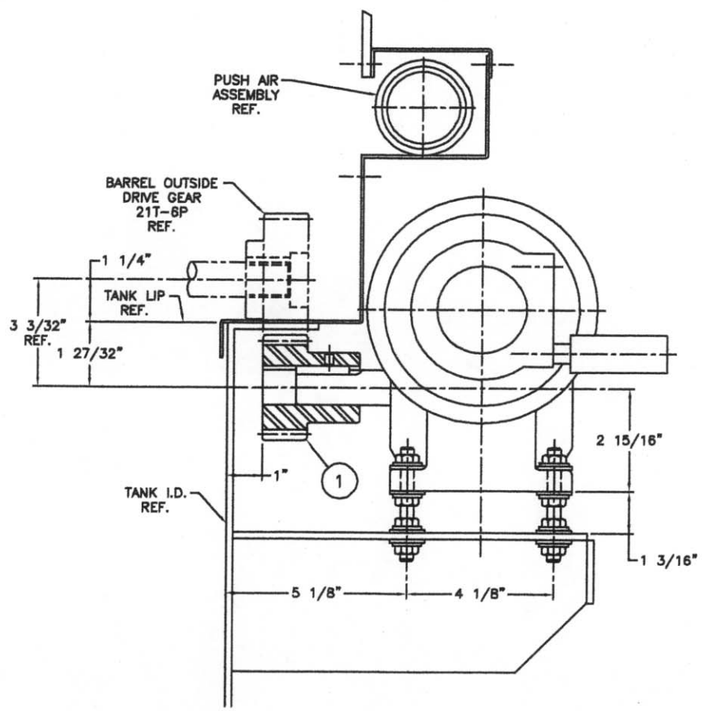

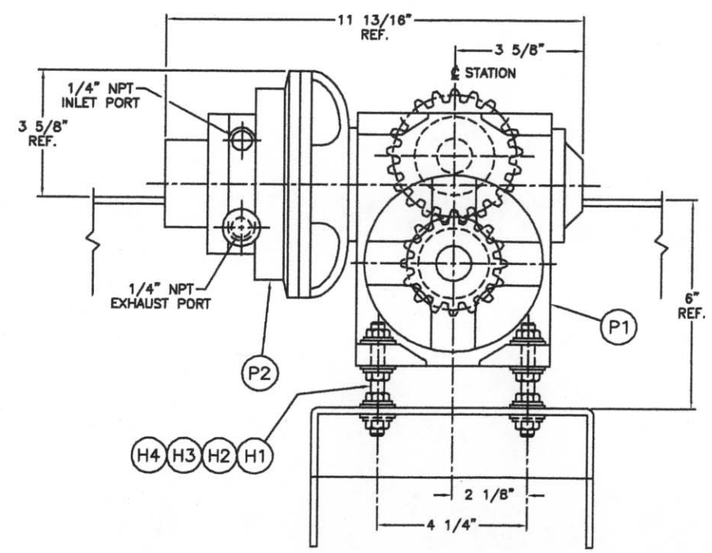

PROFESSIONAL ENGINEER
No. 6895711-2202
DONALD FANNING
STATE OF UTAH
7/15/08

NOTES:

1) HARDWARE SHALL BE TORQUED TO SPECIFICATIONS FOUND ON 'IPT' STANDARD DRAWING NUMBER A-1.
2) APPLY LOCTITE #242 OR EQUIV. TO GEAR SET SCREWS.

QUANTITY SHOWN ARE TOTAL REQUIRED.

ITEM	QTY.	SHT.	DESCRIPTION
H5	20		1/4"-20 X 3/8" LG. CUP PT. SOC. SET SCR.-STEEL
H4	160		3/8"-16 HEX NUT, 316 S.S.
H3	160		3/8" LOCK WASHER, 316 S.S.
H2	160		3/8" FLAT WASHER, 316 S.S.
H1	40		3/8"-16 x 3 1/4" LONG THREADED ROD, 316 S.S.
P2	10		AIR MOTOR, GAST #2AM-NRV-90, NEMA 56C MOUNTING WITH #AC980 MUFFLER
P1	10		REDUCER, BALDOR #STF-225-60-B-AM-1, 1750 RPM INPUT, 29.2 RPM OUTPUT, & 702 IN-LBS TORQUE
1	10		DRIVE GEAR, 16T-6P, 1" BORE, 304 STN.STL. IPT DWG. #050425-R-RG-01

CAD FILENAME 050425-R-BR-01	THIRD ANGLE PROJECTION	UNLESS OTHERWISE SPECIFIED	
SUPPLIER DWG: .	THIS DOCUMENT, INCLUDING THE INFORMATION CONTAINED HEREIN IS THE PROPERTY OF "IPT" CORPORATION AND IS DELIVERED ON THE EXPRESS CONDITION THAT IT MAY NOT BE DISCLOSED, REPRODUCED IN WHOLE OR PART OR USED FOR MANUFACTURE WITHOUT THE WRITTEN CONSENT OF "IPT" CORPORATION.	TOLERANCES: .XX = ±.010 FRACTIONS = ±1/64; .XXX = .005 ANGLES = 0°-30'; BREAK SHARP EDGES .005-.020; FILLET RADII .005-.020; DIMENSIONS ARE IN INCHES	
SUPPLIER NAME: .		DO NOT SCALE DRAWING	
		MATERIAL: .	
		FINISH: .	

	NAME	DATE
DRAWN:	VJT	2/11/05
DES:	.	.
CHECK:	L.MARON	2/22/05
APPR:	.	.
CAD SCALE: 4		
MODEL: .		

INTERNATIONAL PLATING TECHNOLOGY

TITLE: BARREL ROTATOR ASS'Y
GENERAL ATOMICS

DWG. NO. 050425-R-BR-01 REV. .

SCALE: 3"=1'-0" SHEET 1 OF 1

REVISIONS			
Sym.	Description	Name	Date

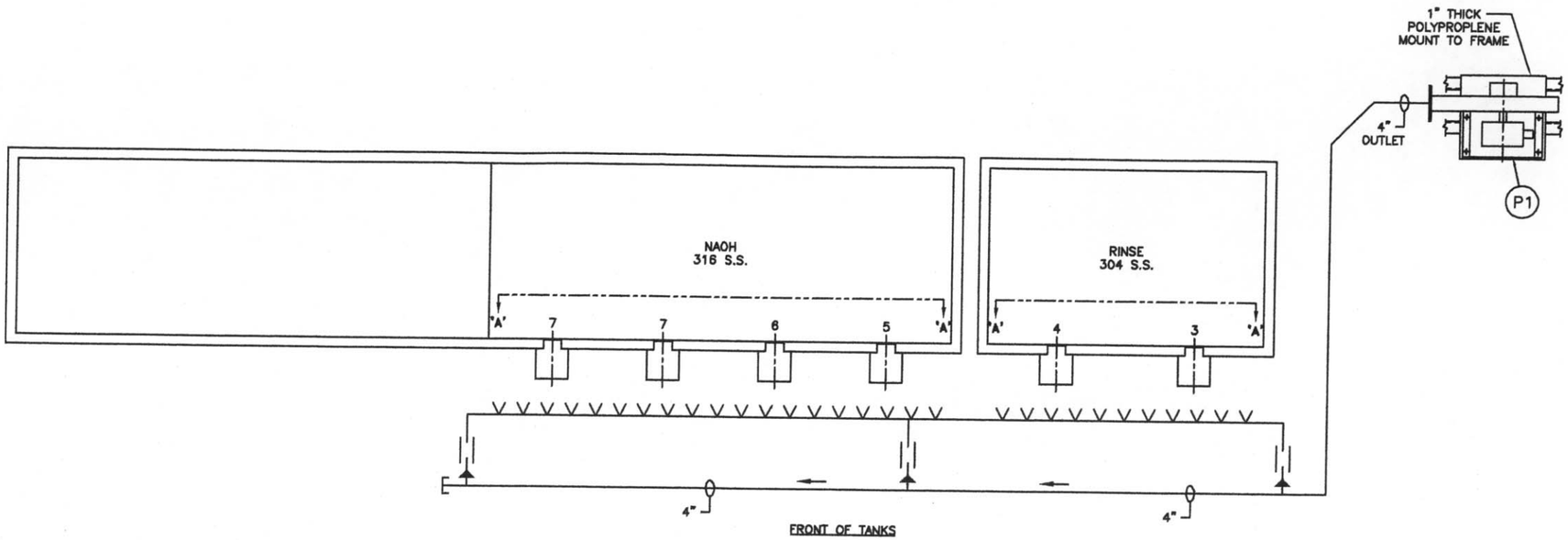

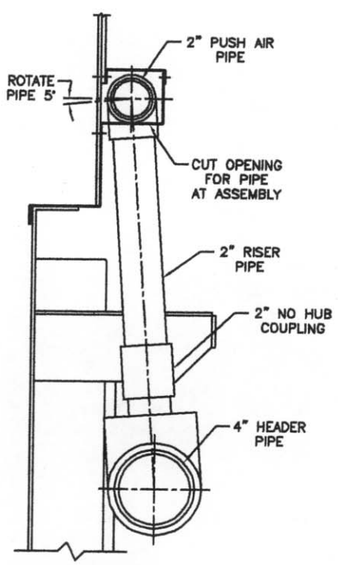

TYPICAL SIDE VIEW
SCALE: 1 1/2"=1'-0"

PUSH AIR PIPING

TANK NO.	PIPING DATA CFM	PIPE SIZE
3-4	68	2"
5-8	116	2"
TOTAL	184	

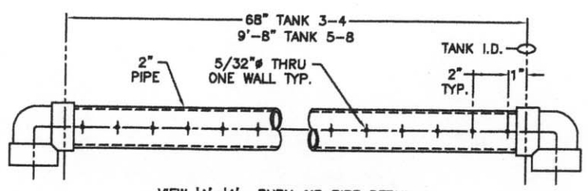

VIEW 'A'-'A' PUSH AIR PIPE DETAIL
SCALE: 1 1/2"=1'-0"
CLEAN OUT ALL CHIPS & DUST AFTER MACHINING

PROFESSIONAL ENGINEER
No. 6895211-2202
DONALD FANNING
7/15/05
STATE OF UTAH

NOTES:

1) ALL PUSH AIR PIPING TO BE SCH. 40 PVC.
2) SEE HEADER TO TANK PIPING DRAWING AS INDICATED IN CHART.
3) SEE 'IPT' DRAWING NUMBER P1 FOR PIPING SYMBOLS.
4) ALL HARDWARE TO BE 316 STAINLESS STEEL.
5) LABEL ALL PIPING INCLUDING DIRECTION OF FLOW.
6) SEE CROSS SECTION DRAWING FOR APPROXIMATE HEADER LOCATION.
7) DRAWING IS A SCHEMATIC ONLY.
8) NEW YORK BLOWER #1404A 1 1/2, 300 CFM, STD. AIR @ 70 DEG. & 14.7 PSIA @ INLET AGAINST A DIFFERENTIAL PRESSURE OF 15" S.P., 1 1/2 H.P., 460/3/60, 3500 RPM T.E.F.C.B.B. WITH INLET FILTER, DISCHARGE BLAST GATE & ISOLATION RAILS, UNIT TO RUN @ 80 DBA OR LOWER @ 5 FEET (UNDUCTED). ASSEMBLY CONFIGURATION = CW BH
9) WELD OR BOLT S. STL. UNISTRUT TO TANK LIPS, GIRTHING OR INSUL. JACKET TO SUPPORT PIPING. DO NOT WELD UNISTRUT TO TANK WALLS

QUANTITY SHOWN ARE TOTAL REQUIRED.

ITEM	QTY.	SHT.	DISCRIPTION
P1	1	~	PUSH AIR BLOWER, (SEE NOTE 8)

THIRD ANGLE PROJECTION

THIS DOCUMENT, INCLUDING THE INFORMATION CONTAINED HEREIN IS THE PROPERTY OF "IPT" CORPORATION AND IS DELIVERED ON THE EXPRESS CONDITION THAT IT NOT BE DISCLOSED, REPRODUCED IN WHOLE OR PART, OR USED FOR MANUFACTURE WITHOUT THE WRITTEN CONSENT OF "IPT" CORPORATION.

UNLESS OTHERWISE SPECIFIED
TOLERANCES
.XX = ±.010 FRACTIONS = ±1/64
.XXX = .005 ANGLES = 0°-30'
BREAK SHARP EDGES .005-.020
FILLET RADII .005-.020
DIMENSIONS ARE IN INCHES
DO NOT SCALE DRAWING
MATERIAL: .
FINISH: .

	NAME	DATE
DRAWN:	VJT	2/15/05
DES:	.	.
CHECK:	L.MARON	2/22/05
APPR:	.	.
CAD SCALE: 32		
MODEL: .		

CAD FILENAME 050425-P-PA-01
SUPPLIER DWG: .
SUPPLIER NAME: .

INTERNATIONAL PLATING TECHNOLOGY

TITLE: PUSH AIR PIPING
GENERAL ATOMICS

DWG. NO. 050425-P-PA-01 REV. .

SCALE: 3/8"=1'=0" SHEET 1 OF 1

REVISIONS			
Sym.	Description	Name	Date
A	REMOVED END SECTION OF DUCT	L.MARON	5/20/05

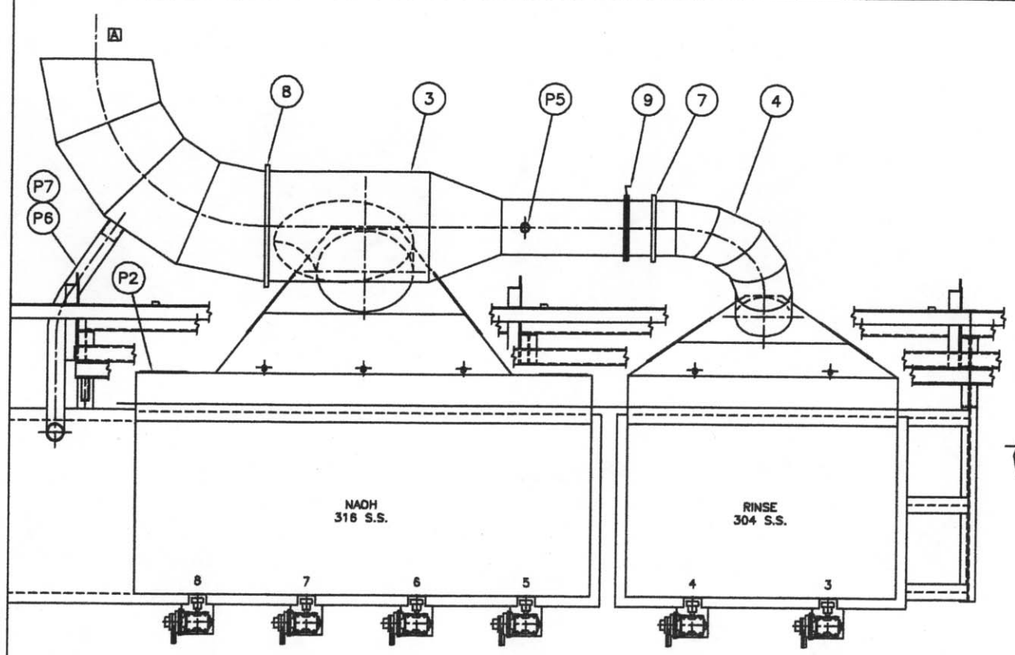

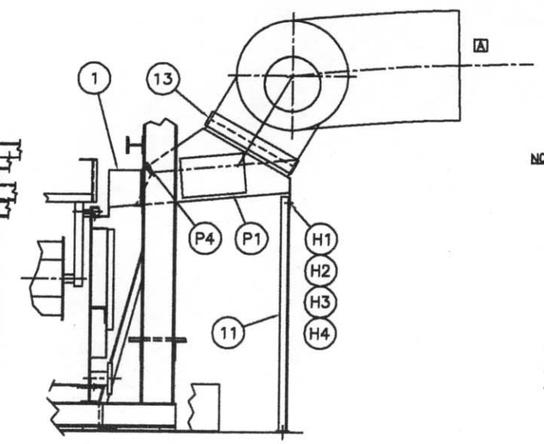

SECTION A–A

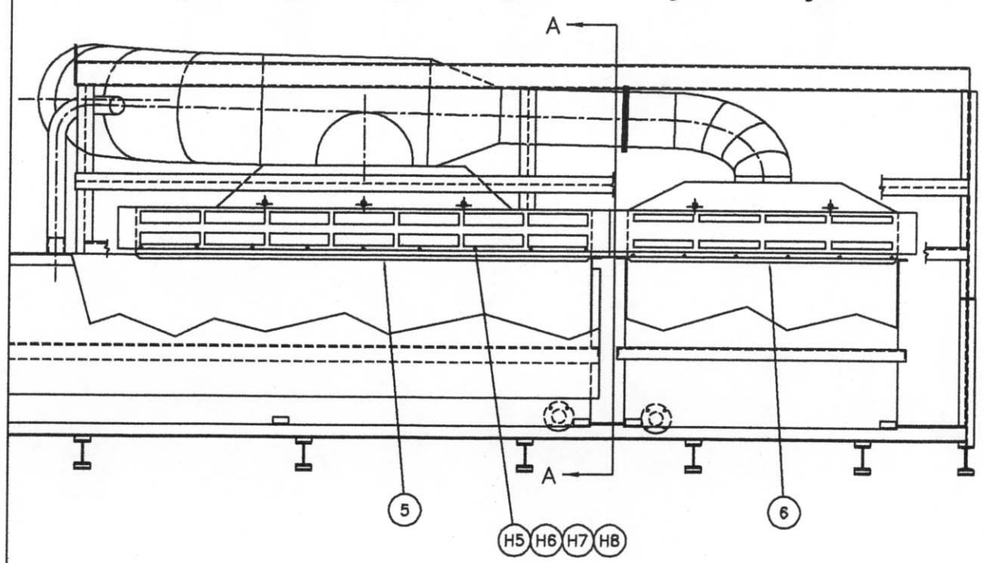

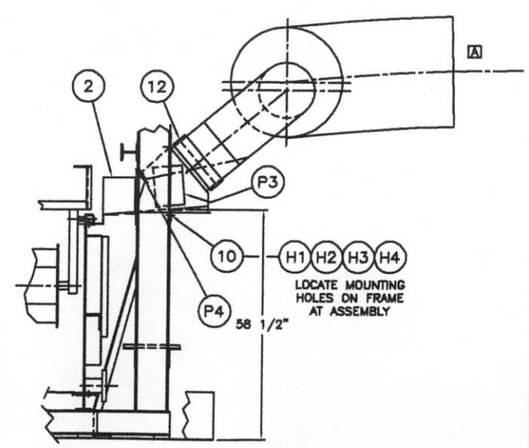

PROFESSIONAL ENGINEER
No. 689571-2202
DONALD FANNING
7/15/05
STATE OF UTAH

NOTES:

1) ALL OPENINGS FOR DUCT EXITS TO BE COMPLETED BY CUSTOMER.
2) INSTALLATION OF DUCTWORK & DUCT SUPPORTS EQUIPMENT TO BE SUPPLIED BY CUSTOMER. VENTILATION SYSTEM TO BE PRE FITTED BY 'IPT' BEFORE SHIPMENT.
3) ALL HOOD & DROP DAMPERS TO BE FULLY OPEN BEFORE STARTING EXHAUST EQUIPMENT.
4) ALL INTERNAL DUCTWORK TO BE SMOOTH & FREE OF ANY LOOSE MATERIAL BEFORE STARTING EXHAUST BLOWER.
5) HOOD SLOT VELOCITY IS CALCULATED AT APPROXIMATELY 2000 FPM.
6) DUCT VELOCITY IS CALCULATED AT APPROXIMATELY 3000 FPM.
7) ALL HOODS TO BE 304 STAINLESS STEEL.
8) ALL DUCT TO BE PVC.
9) STAINLESS STEEL IS TO CONFORM TO ASTM SPECIFICATIONS.

QUANTITY SHOWN ARE TOTAL REQUIRED.

ITEM	QTY.	SHT.	DESCRIPTION
H8	15	~	1/4"–20 HEX NUT, 316 S.S.
H7	15	~	1/4" LOCK WASHER, 316 S.S.
H6	30	~	1/4" FLAT WASHER, 316 S.S.
H5	15	~	1/4"–20 x 1" LG. HEX HD. BOLT, 316 S.S.
H4	4	~	1/2"–13 HEX NUT, 316 S.S.
H3	4	~	1/2" LOCK WASHER, 316 S.S.
H2	8	~	1/2" FLAT WASHER, 316 S.S.
H1	4	~	1/2"–13 x 1 1/2" LG. HEX HD. BOLT, 316 S.S.
P7	2	~	HOSE CLAMP, McMASTER–CARR # 45955K71
P6	12 FT.	~	4" HOSE, McMASTER–CARR #5475K19
P5	1	~	FLOTECT SWITCH, DWYER # V4–SS–2–U
P4	5	~	SPRAY NOZZLE, 1/2" NPT MALE, 120 DEG., 303 S.S. McMASTER–CARR #32885K39 (OR EQUIV.) 4.3 GPM @ 30 PSI
P3	2	~	COVER, UNITED ENERTECH #L–95–C, 8"x14", 304 S.STL.
P2	2	~	COVER, UNITED ENERTECH #L–95–C, 6"x12", 304 S.STL.
P1	2	~	COVER, UNITED ENERTECH #L–95–C, 8"x18", 304 S.STL.
13	1	1	28" FLEX PVC COLLAR WITH CLAMPS
12	1	1	14" FLEX PVC COLLAR WITH CLAMPS
11	2	4	HOOD SUPPORT LEG
10	1	4	DUCT SUPPORT ANGLE
9	1	5	RINSE DUCT DAMPER
8	2	4	NAOH DUCT HANGER
7	1	4	RINSE DUCT HANGER
6	1	2	RINSE HOOD LIP
5	1	2	NAOH HOOD LIP
4	1	3	RINSE DUCT
3	1	3	NAOH DUCT
2	1	2	RINSE HOOD
1	1	2	NAOH HOOD

CAD FILENAME 050425–V–VA–01–A
SUPPLIER DWG: .
SUPPLIER NAME: .

THIRD ANGLE PROJECTION

UNLESS OTHERWISE SPECIFIED
TOLERANCES
.XX = ±.010 FRACTIONS = ±1/64
.XXX = ±.005 ANGLES = ±½°
BREAK SHARP EDGES .005–.020
FILLET RADII .045–.250
DIMENSIONS ARE IN INCHES
DO NOT SCALE DRAWING
MATERIAL: .
FINISH: .

	NAME	DATE
DRAWN:	L.MARON	2/21/05
DES:	.	.
CHECK:	L.MARON	2/23/05
APPR:	.	.
CAD SCALE: 32		
MODEL: .		

INTERNATIONAL PLATING TECHNOLOGY

TITLE: VENTILATION ASSEMBLY
GENERAL ATOMICS

DWG. NO. 050425–V–VA–01–A REV. A

SCALE: 3/8"=1'=0" SHEET 1 OF 5

CAD FILE 59C004g1 | DATE / TIME 07/21/2005

REV	DATE	ZONE	DESCRIPTION	DR	CHK	ENG	APPD	APPD	QA	APPD
N/C	08/20/2004		INITIAL RELEASE (30159-100-21104)	GS		ORIGINAL SIGNED				
A	06/03/2008		PAS ADDITION (A30159-0850)	RJY						
B	03/28/2013		CHILLER TO BE REMOVED	TT						

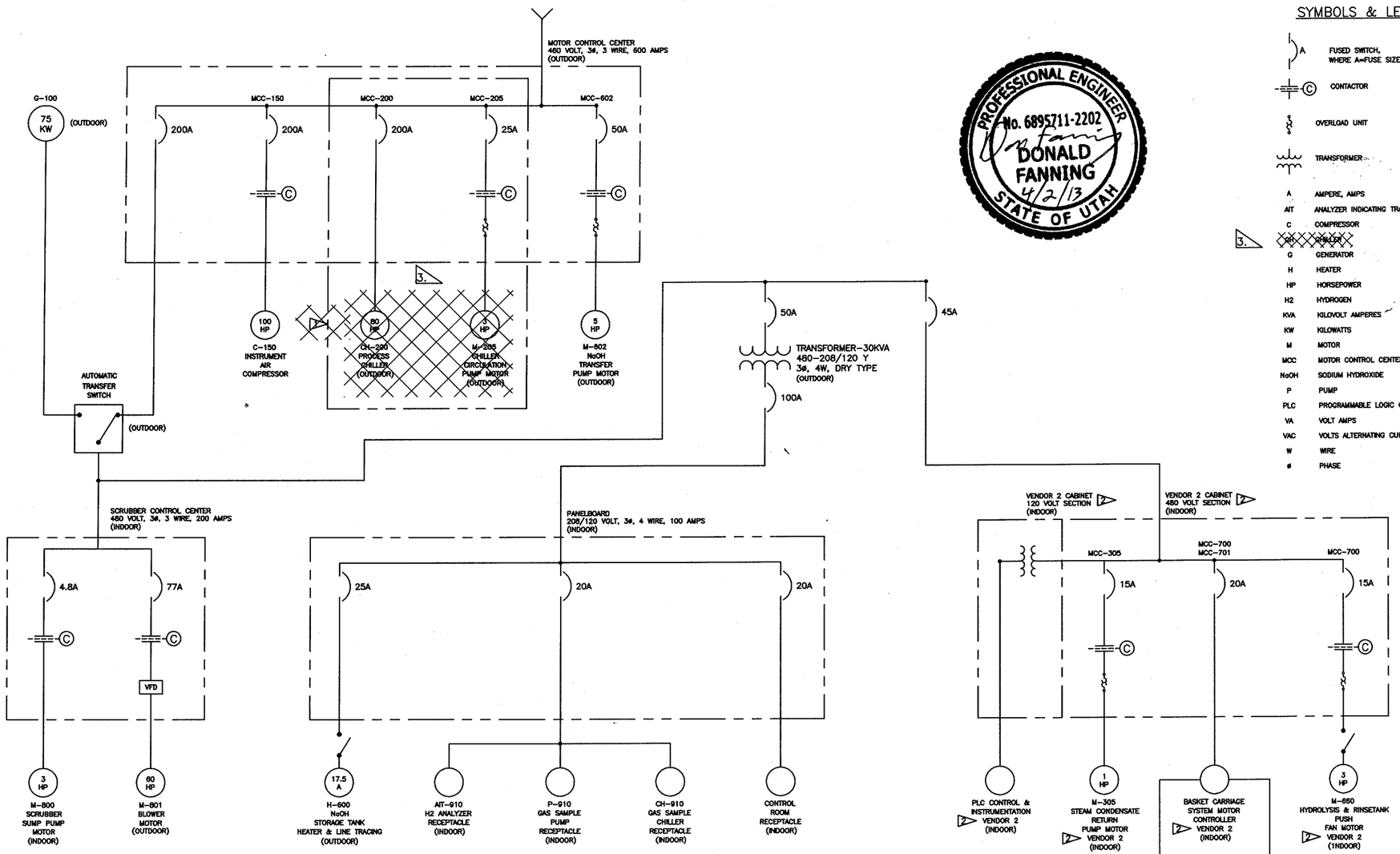

PROFESSIONAL ENGINEER
No. 6895711-2202
DONALD FANNING
4/2/13
STATE OF UTAH

SYMBOLS & LEGEND

- A — FUSED SWITCH, WHERE A=FUSE SIZE IN AMPERES
- C — CONTACTOR
- OVERLOAD UNIT
- TRANSFORMER
- A — AMPERE, AMPS
- AIT — ANALYZER INDICATING TRANSMITTER
- C — COMPRESSOR
- 3. ~~CH — CHILLER~~
- G — GENERATOR
- H — HEATER
- HP — HORSEPOWER
- H2 — HYDROGEN
- KVA — KILOVOLT AMPERES
- KW — KILOWATTS
- M — MOTOR
- MCC — MOTOR CONTROL CENTER
- NaOH — SODIUM HYDROXIDE
- P — PUMP
- PLC — PROGRAMMABLE LOGIC CONTROLLER
- VA — VOLT AMPS
- VAC — VOLTS ALTERNATING CURRENT
- W — WIRE
- ø — PHASE

NOTES:

3. ~~2. VENDOR 1 – CHILLER PACKAGE~~
2. VENDOR 2 – HYDROLYSIS EQUIPMENT LINE.
3. CHILLER TO BE REMOVED.

-1	59C007	
PART DWG. No.	NEXT ASSY	USED ON
	APPLICATION	

GA PROPRIETARY INFORMATION
THIS DOCUMENT IS THE PROPERTY OF GENERAL ATOMICS (GA). ANY TRANSMITTAL OF THIS DOCUMENT OUTSIDE GA WILL BE IN CONFIDENCE, EXCEPT WITH THE WRITTEN CONSENT OF GA, (1) THIS DOCUMENT MAY NOT BE COPIED IN WHOLE OR IN PART AND WILL BE RETURNED UPON REQUEST OR WHEN NO LONGER NEEDED BY RECIPIENT AND (2) INFORMATION CONTAINED HEREIN MAY NOT BE DISCLOSED TO OTHERS AND MAY BE USED BY RECIPIENT ONLY FOR THE PURPOSE FOR WHICH IT WAS TRANSMITTED.
NO GA PROPRIETARY INFORMATION

PROJECT 30159
SYSTEM SCWO
APPRL 5 | EC/SO NA
DSGN E | SIZE NA
TYPE ESLD | ELEC NA
DESIGN

UNLESS OTHERWISE SPECIFIED DIMENSIONS ARE IN INCHES. NO BURRS OR SHARP EDGES. DIMENSIONS PER ASME Y14.5M
TOLERANCES:
FRACTIONS DECIMALS ANGLES
± .X ± ±
.XX ±
.XXX ±
ALL MACHINED SURFACES √
CALC WT
CAL

GENERAL ATOMICS
SAN DIEGO, CALIFORNIA

TITLE
CAD HPPP ELECTRICAL SINGLE LINE DIAGRAM

SIZE C | CAGE CODE 4V360 | DWG NO 59C004 | REV A
SCALE NONE | SHEET 1 OF 1