ATTACHMENT 10

APE 1236 DRAWINGS

Attachment 10
APE 1236 Drawings

Number	Date	Title
HWI-PERMIT-01	13-Dec-06	Site Layout (Isometric) w/ Ceramic Baghouse
HWI-PERMIT-02	13-Dec-06	APE 1236 w/ Ceramic Baghouse Site Layout (Plan)
HWI-PERMIT-03	21-Sep-10	APE 1236 w/ Ceramic Baghouse Site Layout Elevation
HWI-PERMIT-04	21-Sep-10	APE 1236 w/ Ceramic Baghouse Site Layout Elevation
HWI-PERMIT-05	13-Dec-06	APE 1236 w/ Ceramic Baghouse Furnace Site Elevation
HWI-PERMIT-06	13-Dec-06	APE 1236 w/ Ceramic Baghouse Furnace Assembly
HWI-PERMIT-07	13-Dec-06	Cast Retort Sections Details and Assembly
HWI-PERMIT-08	13-Dec-06	Cast Retort Sections Details and Assembly
HWI-PERMIT-09	9-Jan-07	Burner and Blower Assembly
HWI-PERMIT-10	9-Jan-07	Burner and Blower Assembly and Details
HWI-PERMIT-17	13-Dec-06	Afterburner Assembly
HWI-PERMIT-20	13-Dec-06	Cyclone Assembly
HWI-PERMIT-21	21-Sep-10	Ceramic Baghouse
HWI-PERMIT-22	13-Dec-06	Draft Fan
HWI-PERMIT-23	21-Sep-10	Stack Platform
HWI-PERMIT-24	10-Jan-08	Exhaust Stack
HWI-PERMIT-25	10-Jan-08	Exhaust Stack Details
HWI-PERMIT-31	9-Jan-07	Gas Monitoring Sample Probe
HWI-PERMIT-32	9-Jan-07	CO & O2 Monitoring Sample System
HWI-PERMIT-36	9-Jan-07	Furnace Control Diagram
HWI-PERMIT-45	13-Dec-06	Conduit Routing Layout

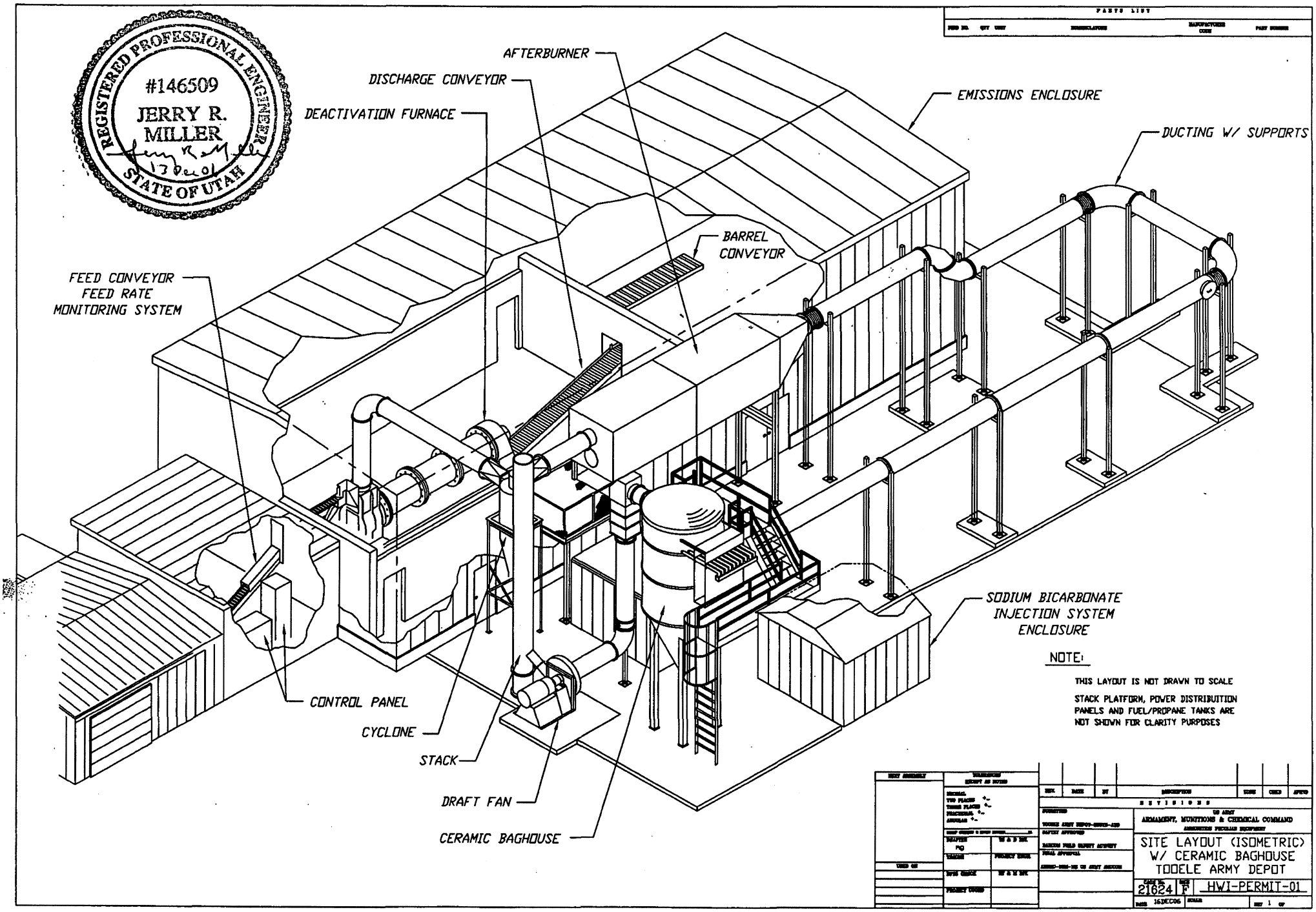
REGISTERED PROFESSIONAL ENGINEER
#146509
JERRY R. MILLER
STATE OF UTAH
AFTERBURNER
DISCHARGE CONVEYOR
DEACTIVATION FURNACE
EMISSIONS ENCLOSURE
DUCTING W/ SUPPORTS
BARREL CONVEYOR
FEED CONVEYOR
FEED RATE
MONITORING SYSTEM
SODIUM BICARBONATE
INJECTION SYSTEM
ENCLOSURE
CONTROL PANEL
CYCLONE
STACK
DRAFT FAN
CERAMIC BAGHOUSE
NOTE:
THIS LAYOUT IS NOT DRAWN TO SCALE
STACK PLATFORM, POWER DISTRIBUITION PANELS AND FUEL/PROPANE TANKS ARE NOT SHOWN FOR CLARITY PURPOSES
US ARMY
ARMAMENT, MUNITIONS & CHEMICAL COMMAND
SITE LAYOUT (ISOMETRIC)
W/ CERAMIC BAGHOUSE
TOOELE ARMY DEPOT
21624
F
HWI-PERMIT-01
16DEC06

PARTS LIST

FIND NO.	QTY	UNIT	NOMENCLATURE	MANUFACTURER CODE	PART NUMBER

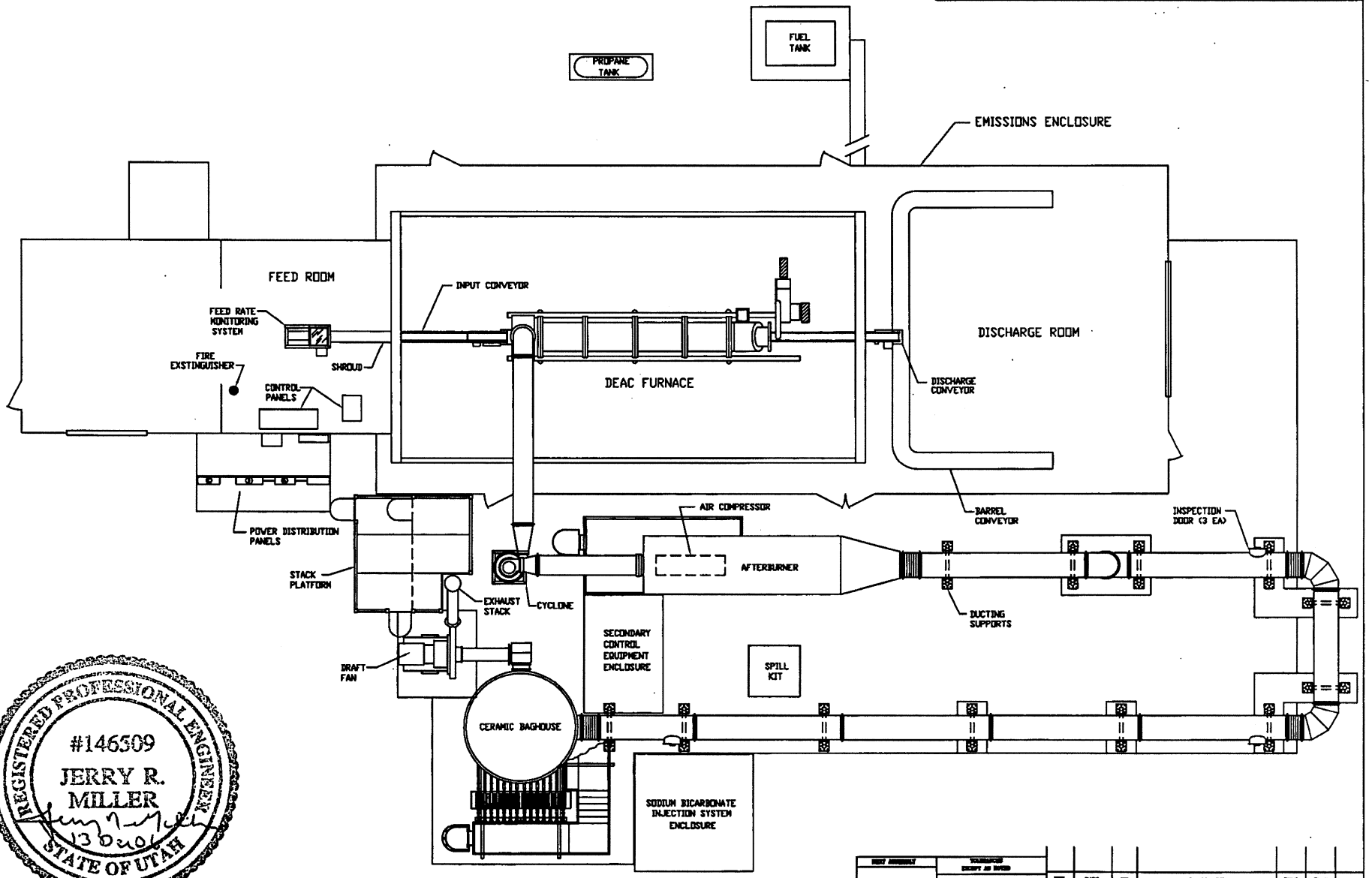

REGISTERED PROFESSIONAL ENGINEER
#146509
JERRY R. MILLER
13 Dec 06
STATE OF UTAH

NOTE:

1. VERTICAL CLEARANCE UNDER THE AFTERBURNER IS 7' TO FRAME AND 11' TO FLOOR SUPPORTS
2. DUCT LENGTH FROM AFTERBURNER TO CERAMIC BAGHOUSE APPROX 120 FT

NEXT ASSEMBLY	TOLERANCES EXCEPT AS NOTED	REV.	DATE	BY	DESCRIPTION	ZONE	CHKD	APPD
USED ON	DECIMAL TWO PLACES +/- THREE PLACES +/- FRACTIONAL +/- ANGULAR +/-	REVISIONS						

US ARMY
ARMAMENT, MUNITIONS & CHEMICAL COMMAND
AMMUNITION PECULIAR EQUIPMENT

SUBMITTED: TOOELE ARMY DEPOT-SMCAL-ASD
DATE APPROVED
DARCOM FIELD SAFETY ACTIVITY
FINAL APPROVAL
ARMCO-DSDS-SE TO ARMY ARCOMS

APE 1236 W/ CERAMIC BAGHOUSE
SITE LAYOUT (PLAN)
TOOELE ARMY DEPOT

CAGE No. 21624 | SIZE F | HWI-PERMIT-02
DATE 16DEC06 | SCALE 1:40 | SHT 1 OF

PARTS LIST					
FIND NO.	QTY	UNIT	NOMENCLATURE	MANUFACTURER CODE	PART NUMBER

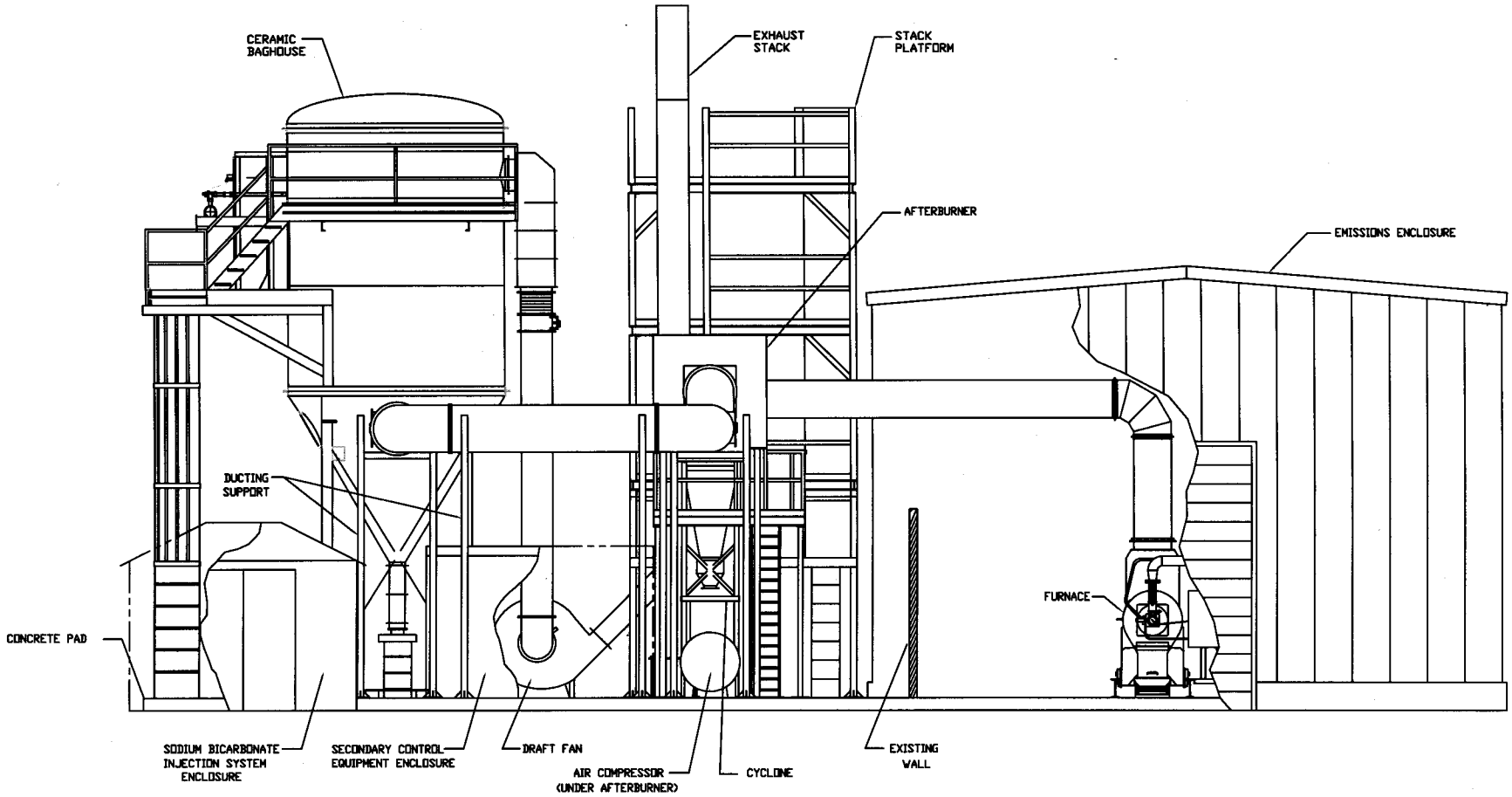

VIEW 'A-A'

PROFESSIONAL ENGINEER
No. 6895711-2202
DONALD FANNING
9/23/10
STATE OF UTAH

NEXT ASSEMBLY	TOLERANCES EXCEPT AS NOTED	REV.	DATE	BY	DESCRIPTION	ZONE	CHKD	APPVD
	DECIMAL TWO PLACES +- THREE PLACES +- FRACTIONAL +- ANGULAR +-	REVISIONS						
	DRAFTER T TATE	SUBMITTED TOOELE ARMY DEPOT-CRUZE-ARD			US ARMY ARMAMENT, MUNITIONS & CHEMICAL COMMAND ASSOCIATION PECULIAR EQUIPMENT			
USED ON	TRACER	DRAFTER FIELD SAFETY ACTIVITY			APE 1236 W/CERAMIC BAGHOUSE			
	DFTG CHECK	FINAL APPROVAL			SITE LAYOUT ELEVATION			
	PROJECT CODE	AMSMC-DEM-MI US ARMY AMCCOM			TOOELE ARMY DEPOT			
					CAGE No. 21624	SIZE F	HWI-PERMIT-03	
					DATE 21SEPT10	SCALE	SHT 1 OF 1	

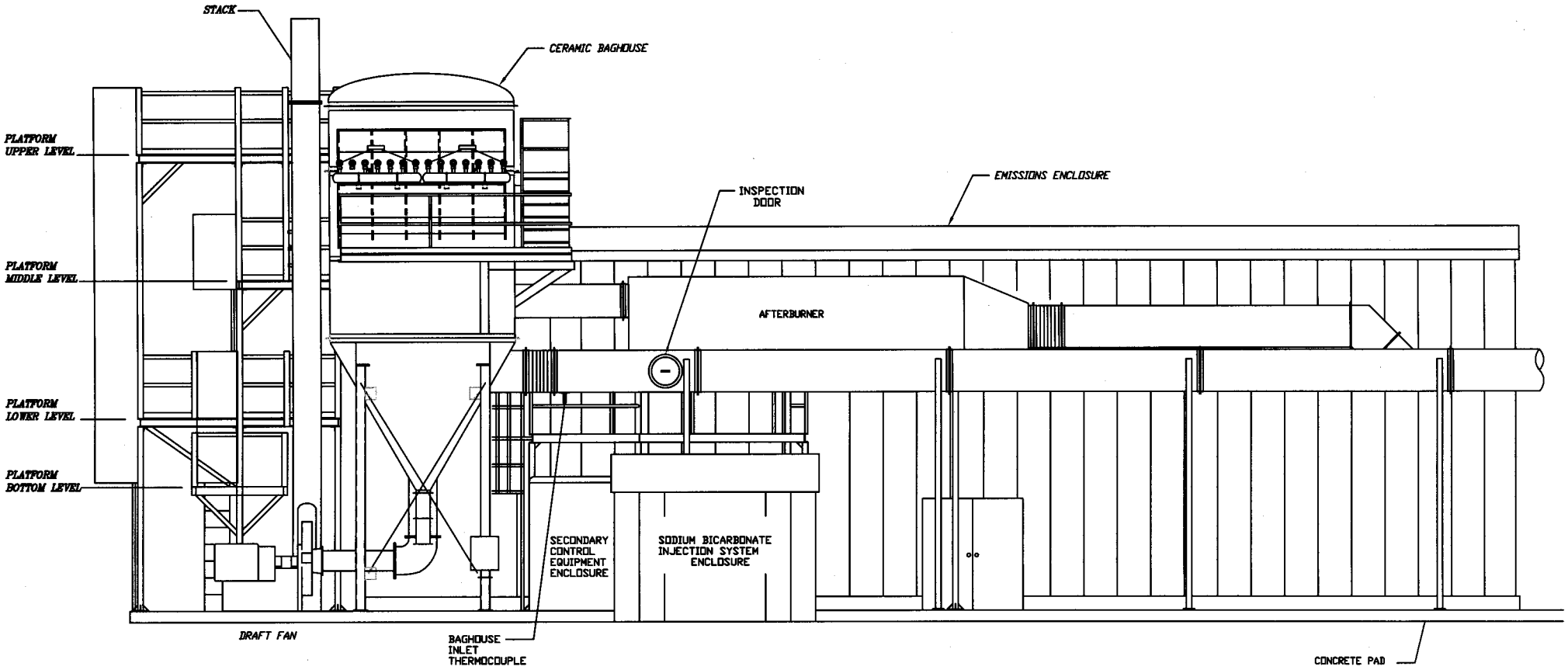

VIEW 'B-B'

PROFESSIONAL ENGINEER
No. 6895711-2202
DONALD FANNING
9/23/10
STATE OF UTAH

PARTS LIST

FIND NO.	QTY	UNIT	NOMENCLATURE	MANUFACTURER CODE	PART NUMBER

REVISIONS

US ARMY
ARMAMENT, MUNITIONS & CHEMICAL COMMAND
AMMUNITION PECULIAR EQUIPMENT

APE 1236 W/CERAMIC BAGHOUSE
SITE LAYOUT ELEVATION
TOOELE ARMY DEPOT

T TATE

CAGE No. 21624 | SIZE F | HWI-PERMIT-04

DATE 21SEPT10 | SCALE 1:30 | SHT 1 OF 1

PARTS LIST

ITEM NO.	QTY	UNIT	NOMENCLATURE	MANUFACTURER CODE	PART NUMBER

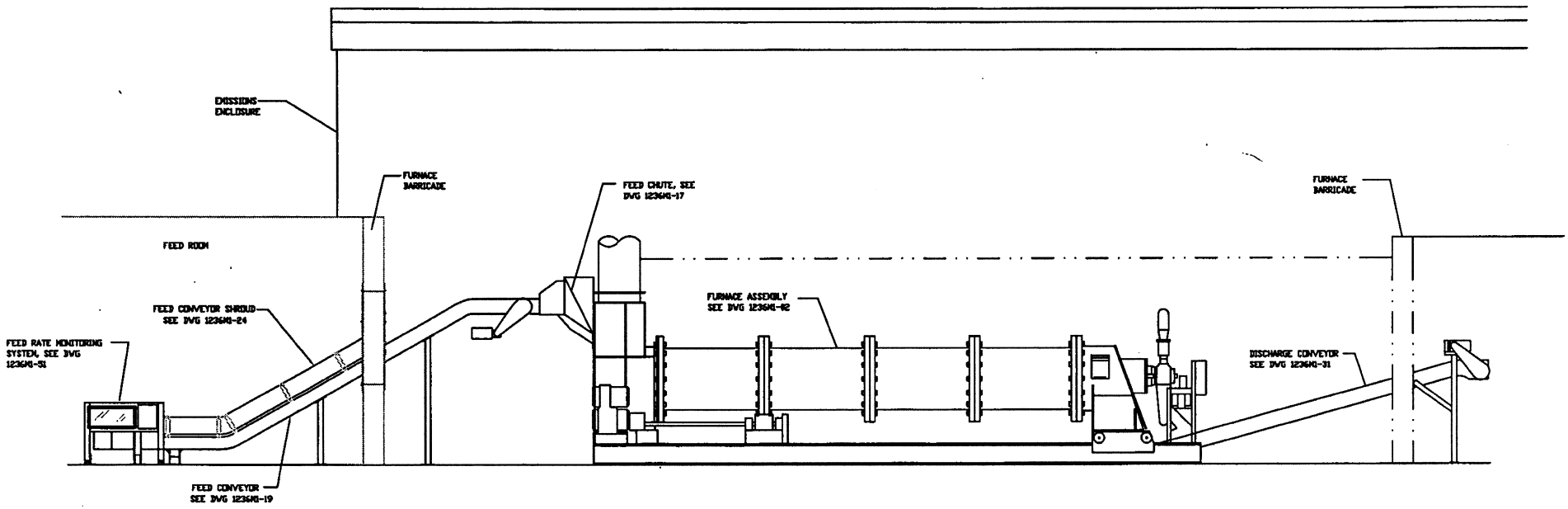

SECTION 'A-A'

REGISTERED PROFESSIONAL ENGINEER
#146509
JERRY R. MILLER
STATE OF UTAH

DO NOT SCALE DWG

NEXT ASSEMBLY	TOLERANCES EXCEPT AS NOTED
1236M1-01 SHT 2	DECIMAL TWO PLACES +- THREE PLACES +- FRACTIONAL +- ANGULAR +- N/A
USED ON	DRAFTER ngarcia; TO & D INT.; TRACER; PROJECT ENGR.; DWG CHECK; NT & M INT.; PROJECT COORD

REV.	DATE	BY	DESCRIPTION	ZONE	CHKD	APPVD

REVISIONS

SUBMITTED: TOOELE ARMY DEPOT-SOUTH-AND
SAFETY APPROVED: BARCOM FIELD SAFETY ACTIVITY
FINAL APPROVAL: AMMO-DOM-ME US ARMY AMCOM

US ARMY
ARMAMENT, MUNITIONS & CHEMICAL COMMAND
AMMUNITION PECULIAR EQUIPMENT

APE 1236 W/ CERAMIC BAGOUSE

FURNACE SITE ELEVATION

CAGE No. 21624 | SIZE F | HWI-PERMIT-05

DATE 16DEC06 | SCALE 1:25 | SHT 1 OF 1

PARTS LIST

FIND NO.	QTY	UNIT	NOMENCLATURE	MANUFACTURERS CODE	PART NUMBER

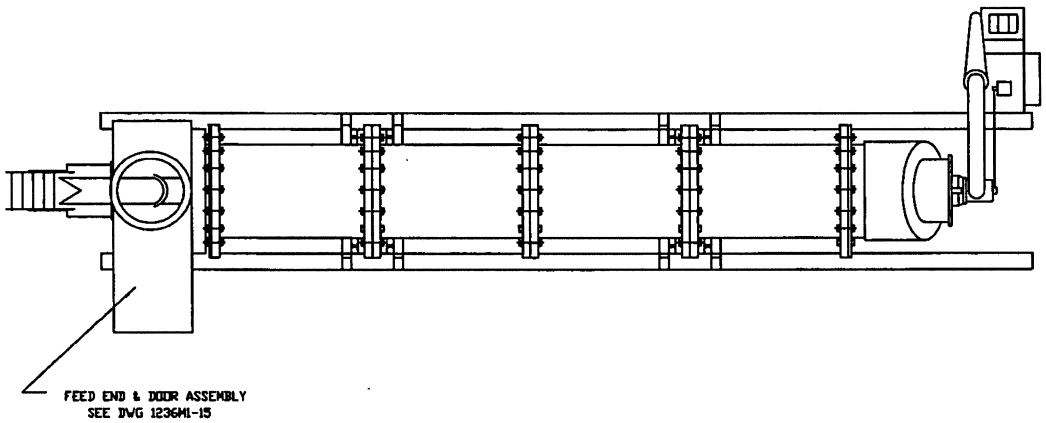

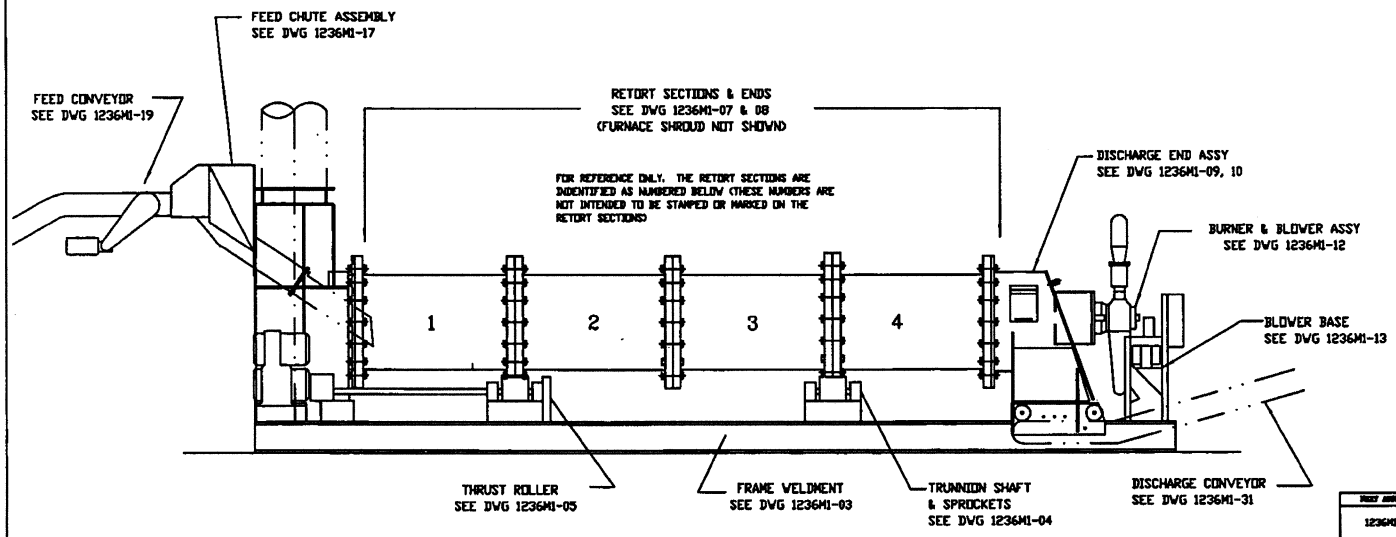

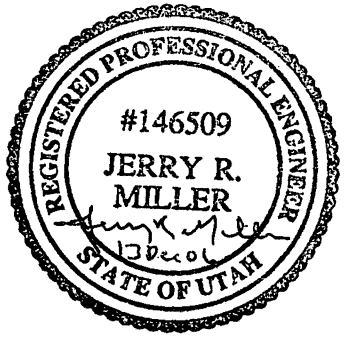

DO NOT SCALE DWG

NEXT ASSEMBLY: 1236M1-01

TOLERANCE EXCEPT AS NOTED: DECIMAL TWO PLACES +-, THREE PLACES +-, FRACTIONAL +-, ANGULAR +-: N/A

DRAWN: rgarcia — W & D INC.

CHECKED — PROJECT ENGR.

STRS CHECK — EF & M INC.

PROJECT COORD.

USED ON

REV.	DATE	BY	DESCRIPTION	ZONE	CHKD	APVD

REVISIONS

SUBMITTED: US ARMY ARMAMENT, MUNITIONS & CHEMICAL COMMAND, AMMUNITION PROGRAM EQUIPMENT

TOOKEN ARMY INFOR-SERVS-AED

SAFETY APPROVED

SAGCOM FIELD SAFETY AGENCY

FINAL APPROVAL

AMMRD-2000-20 US ARMY AMCCOM

APE 1236 W/CERAMIC BAGHOUSE
FURNACE ASSEMBLY

CAGE No. 21624 | SIZE F | HWI-PERMIT-06

DATE 16DEC06 | SCALE 1:20 | SHT 1 OF 1

NOTES:

1. TYPE "B", TWO RETORT SECTIONS SHALL BE THE SAME AS SHOWN EXCEPT THAT THE SPIRAL SHALL BEGIN AT A HEIGHT OF FOUR(4) INCHES AND INCREASE UNIFORMALY TO A HEIGHT OF TEN (10) INCHES OVER THE LENGHT OF THE SECTION. MACHINE RELIEF IN FACE OF 10" SPIRAL (ONLY THAT FACE WHICH MATCHES TYPE "B" SECTION TO TYPE "A" SECTION)

2. TYPE "C, LEAD OF SPIRALS IS 30" UNIFORMLY ON THEIR PERIPHERY. A TRANSITION FROM 9" TO 12" IN HEIGHT IS MADE IN THE FIRST 180" TO MATE WITH OTHER INCREMENTS. PERFORM THIS TRANSITION ON ONE END ONLY. MACHINE RELIEF IN FACE OF SPIRAL AT EACH END.

3. PATTERNS, SN4925-1236-P100 AVAILABLE AT TOOELE ARMY DEPOT.

4. ANY REPAIR OF THE STEEL CASTING THAT MAY BE REQUIRED WILL BE IN ACCORDANCE WITH ASTM A488M-88 OR LATEST EDITION

REGISTERED PROFESSIONAL ENGINEER
#146509
JERRY R. MILLER
STATE OF UTAH
13 Oct 01

PARTS LIST

FIND NO.	QTY	REV	NOMENCLATURE	MANUFACTURER CODE	PART NUMBER
			DO NOT REUSED PART NUMBER 12360701 TO AVOID PART NUMBER DUPLICATION	[redacted]	12360701
	2		RETORT, TYPE "B" IN ACCORDANCE WITH APE 1236 ASTM A217M-91 STEEL, GRADE WC-9, 2 1/4 WALL X 50 O.D. X 60 LONG		12360702
	2		RETORT, TYPE "C" IN ACCORDANCE WITH APE 1236 ASTM A217M-91 STEEL, GRADE WC-9, 2 1/4 WALL X 50 O.D. X 60 LONG		12360703
0704	45		CAPSCREW, HEX HEAD 1 1/2-6UNC-2A X 8 LG		
0705	45		NUT, 1 1/2-6UNC-2B		
0706	45		WASHER, LOCK 1 1/2		

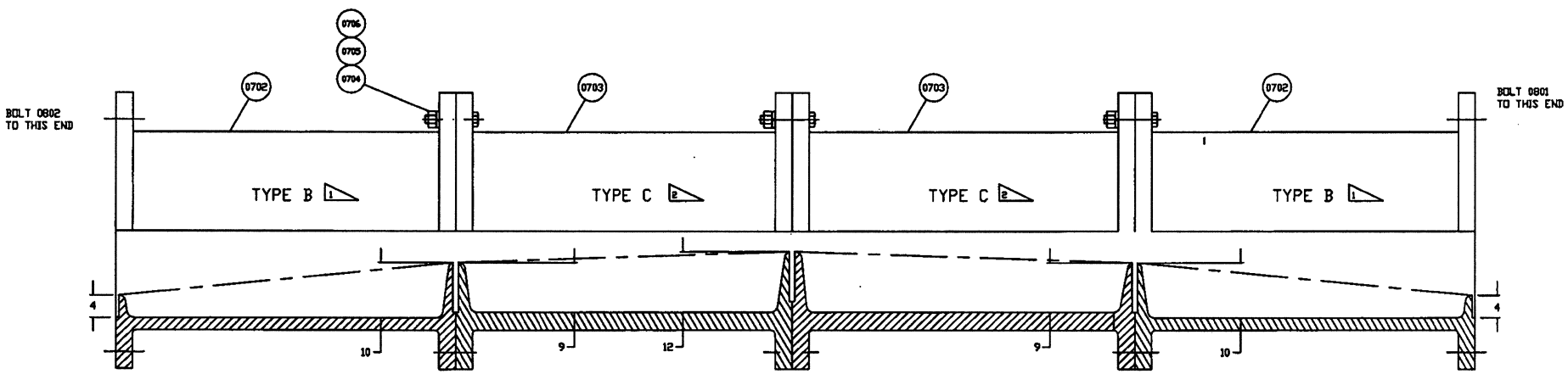

ASSEMBLY

NEXT ASSEMBLY	TOLERANCE EXCEPT AS NOTED	REV	DATE	BY	DESCRIPTION	DONE	CHKD	APPRD
1236M1-02	INCHES: TWO PLACES +-; THREE PLACES +-; FRACTIONAL +-1/32; ANGULAR +-0°-30'							

REVISIONS

US ARMY
ARMAMENT, MUNITIONS & CHEMICAL COMMAND
AMMUNITION PECULIAR EQUIPMENT

CAST RETORT SECTIONS
DETAILS AND ASSEMBLY

CAGE No. 21624 | REV F | HWI-PERMIT-07
DATE 9OCT99 | SCALE 1/8 = 1 | SHT 1 OF 1

PARTS LIST

ITEM NO.	QTY REQ	NOMENCLATURE	MANUFACTURERS CODE	PART NUMBER

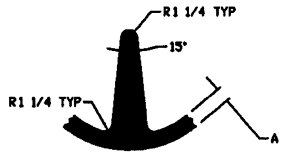

SECTION 'A-A'

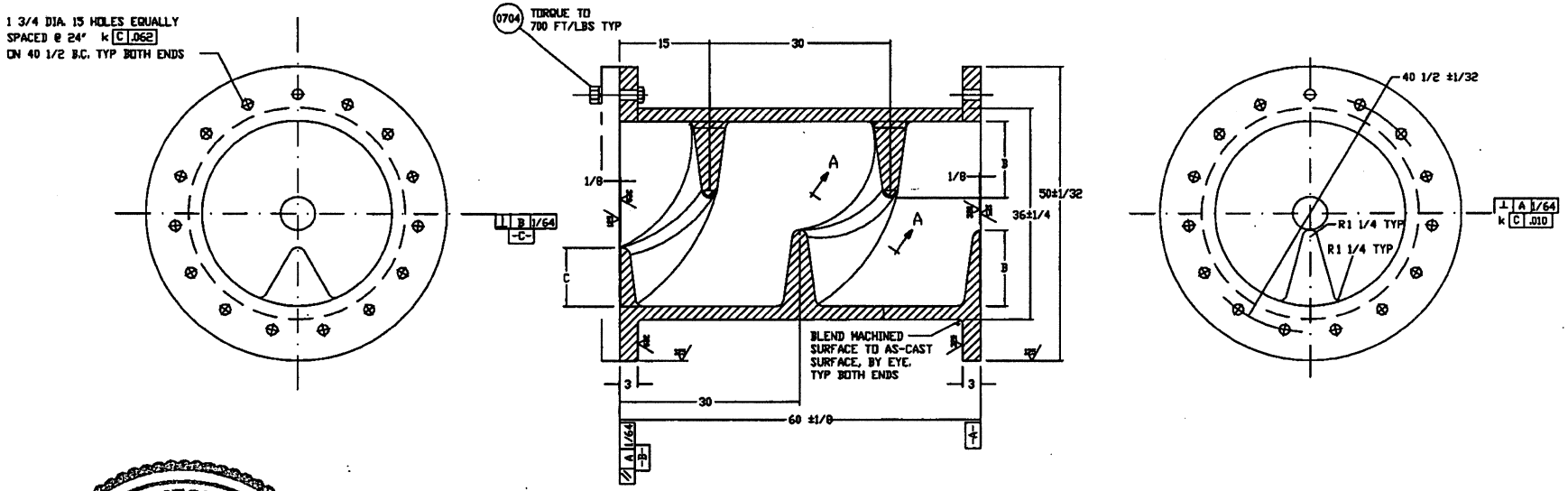

0701 TYPE 'A' DELETED (SEE ECO #06-95)

0702 TYPE 'B'

0703 TYPE 'C'

	DIM A	DIM B	DIM C
0701	2 1/4	13	10
0702	2 1/4	10	4
0703	3 1/4	12	9

ALL ± 1/4 TOLERANCE

REGISTERED PROFESSIONAL ENGINEER
#146509
JERRY R. MILLER
30 Oct 06
STATE OF UTAH

NEXT ASSEMBLY: 1236MI-07, SHT 1 OF 2

USED ON

TOLERANCES EXCEPT AS NOTED
DECIMAL: TWO PLACES +-; THREE PLACES +-; FRACTIONAL +-1/32; ANGULAR +-0°-15'

DRAFTER: rgarcia — DR & D DIV.
DRAWN — PROJECT ENGR.
SPEC CHECK — DR & D DIV.
PROJECT CHIEF

REV.	DATE	BY	DESCRIPTION	ZONE	CHKD	APPVD

REVISIONS

SUBMITTED
TOOELE ARMY DEPOT-ANNIS-AND
DEPUTY APPROVED
DANGER FIELD SAFETY ACTIVITY
FINAL APPROVAL
ARMED-DEM-MI TO ARMY ARDCOM

US ARMY
ARMAMENT, MUNITIONS & CHEMICAL COMMAND
ARDCOM FACILITY EQUIPMENT

CAST RETORT SECTION
DETAILS AND ASSEMBLY

CAGE No. 21624 | SIZE F | HWI-PERMIT-08
DATE 9OCT99 | SCALE 1/8 = 1 | SHT 1 OF 1

REGISTERED PROFESSIONAL ENGINEER
#146509
JERRY R. MILLER
STATE OF UTAH

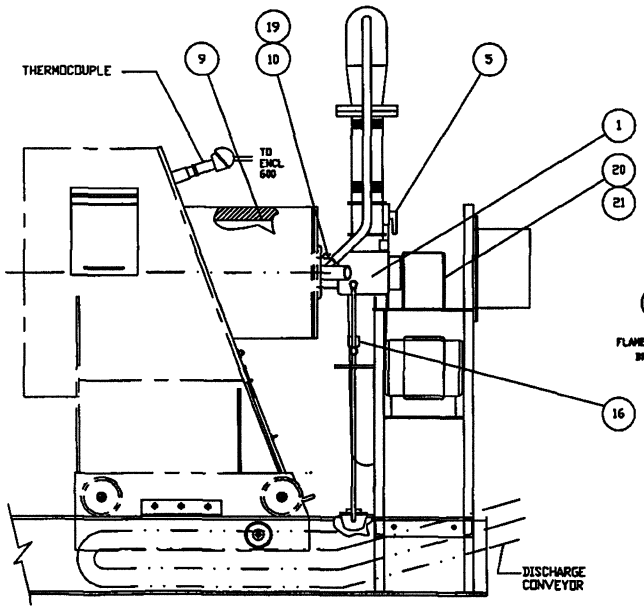

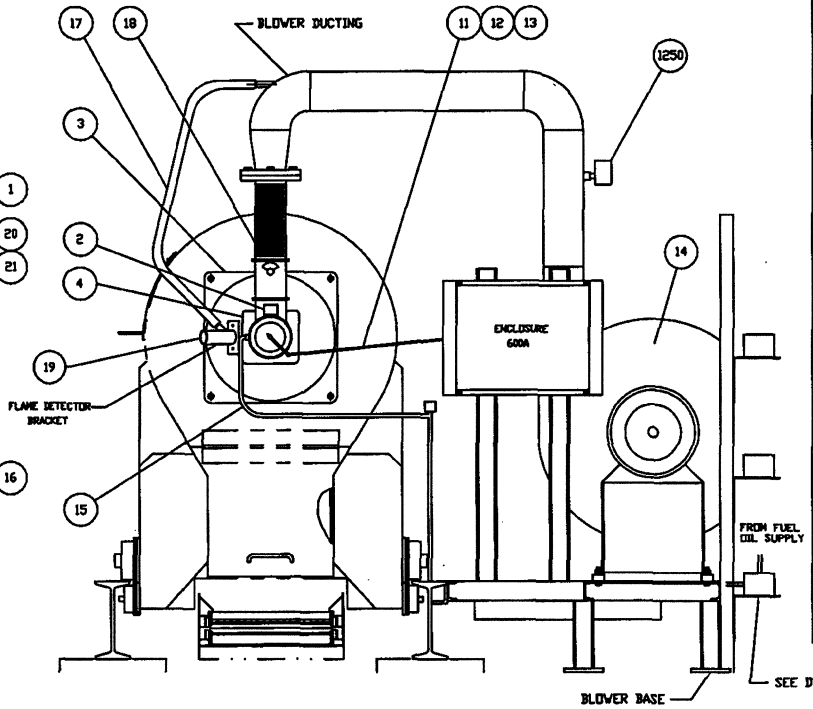

PARTS LIST

FIND NO.	QTY	UNIT	NOMENCLATURE	MANUFACTURER CODE	PART NUMBER
1	1		CFM AIR, MODEL 783P REF: HAUCK P/N 12723	27695	
2	1		SWITCH, MICRO STARTING LOW-FIRE REF: HAUCK P/N 10849	27695	
3	1		MOUNTING PLATE WITH OPENING FOR ELEC EYE MTG. BRACKET REF: HAUCK P/N 782 (FOR BURNER P/N783P)	27695	
4	1		BRACKET, PYRAMID BURNER MOUNTING WITH TOP COVER FOR ELEC. SPARK IGNITION REF: HAUCK P/N 11894 (FOR BURNER P/N 783P)	27695	
5	1		VALVE, BUTTERFLY AIR, 4 NPT SIZE REF: HAUCK P/N 44371	27695	
6	1		VALVE, GLOBE OIL, 3/8 NPT SIZE REF: HAUCK P/N 41693	27695	
7	1		OIL FILTER, 3/8 NPT SIZE REF: HAUCK P/N 11043	27695	
8	1		REGULATOR, OIL PRESSURE, W/GAUGE REF: HAUCK MODEL PRG 3A P/N 11290 (REGULATOR) & 10881 (GAUGE)	27695	
9	1		REFRACTORY, IGNITION TILE REF: HAUCK P/N 44255	27695	
10	2		IGNITION, ELECTRODE, DIRECT SPARK WITH KIT FOR PYRAMID BRACKET REF: HAUCK P/N 14440	27695	
11	1		ARM, CRANK, W/ 1/4 INCH WIDE SLOT X 4 INCH LENGTH ADJUSTMENT SLOT W/ ADAPTER BRACKET REF: HONEYWELL P/N 7617ADV	27319	
12	1		CONNECTOR, LINKAGE AND ACTUATOR CONTROL SWIVELS REF: HAUCK P/N 14149	27695	
13	1		CONNECTING ROD		
14			BLOWER, COMBINATION AIR W/5 HP MOTOR 740 CFM AT 16 OZ DISCHARGE PRESSURE AT NO 3 DISCHARGE POSITION REF: HAUCK MODEL No. TBA-16-5-T-C3D CW/MTR P/N 18581X030	27695	
15	1		HOSE, FUEL OIL 3/8 NPT MALE AND FEMALE SWIVEL ENDS 45" LONG REF PARKER P/N 821-01-02-6-6-8-45	87373	
16	1		VALVE, 2-WAY OIL SOLENOID GENERAL PURPOSE ENCLOSURE, 3/8 NPT PORTS, 110 VAC, BRASS BODY REF: ASCO P/N 8210C93	04845	
17	1		HOSE, AIR 3/4 I.D. X 48 LG, W/ 3/4 NPT FEMALE COUPLING BOTH ENDS REF: PARKER P/N 8010202-12-12-12-48	87373	
18	1		NIPPLE, PIPE FLEXIBLE MALE-FLANGE STAINLESS STEEL 12 1/2 LONG MODEL NO FPM3400-STSTL-X12 1/2 REF: HAUCK P/N 806591	27695	
19	A/R	FT	CABLE, ELECTRONIC IGNITION HIGH VOLTAGE CWT LEAD TINNED COPPER 18 AWG RATED 110 KV. BREAKDOWN, 40,000 V WORKING, RED VINYL JACKET REF: BELDEN P/N 8866	16428	
20	1		ACTUATOR, PROPORTIONAL CONTROL, MODUTROL IV, NON-SPRING RETURN, FOOT MOUNTED, 150 LB-IN TORQUE, 120V POWER, 4-20mA CONTROL, 90° ROTATION, 30 SEC STROKE, NO AUX SWITCH, W/SCREW TERMINALS REF: HONEYWELL P/N M7284A1004	27319	
21	1		WEATHERPROOFING KIT FOR ACTUATOR REF: HONEYWELL P/N 4074EKU	27319	
22	1		DETECTOR, FLAME, UV, AMBIENT TEMP RANGE -40° TO +250°, W/ INTEGRAL COLLAR FOR MOUNTING TO 1 NPT SIGHTING PIPE REF: HONEYWELL P/N C7035A1056	27319	

NOTES:

1. ITEMS 2 THRU 9 ARE FURNISHED AS AN ASSEMBLY UNDER THE HAUCK PART NUMBER 783. ADDITIONAL PARTS ARE LISTED FOR REPLACEMENT PURPOSES ONLY.

2. SEE DWG HWI-PERMIT-10 FOR MAIN BURNER ASSY & PROPANE PILOT ASSY

DO NOT SCALE DWG

REV.	DATE	BY	DESCRIPTION	DRWN	CHKD	APPVD

REVISIONS

US ARMY
ARMAMENT, MUNITIONS & CHEMICAL COMMAND
ANNISTON ARMY DEPOT

BURNER AND BLOWER ASSEMBLY

DRAWN: rgarcia

CAGE No. 21624 | SIZE F | HWI-PERMIT-09

DATE 16DEC06 | SCALE 1:8 | SHT 1 OF 1

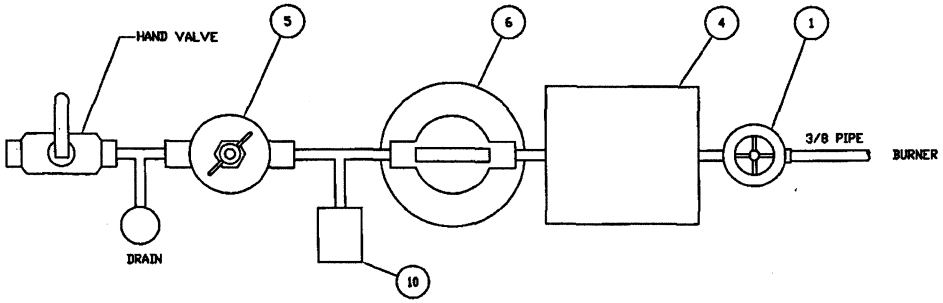

MAIN BURNER ASSEMBLY

SHOWN AS SINGLE LINE ASSEMBLY FOR CLARITY
ACTUALLY BENDS TO FIT AROUND OTHER EQUIPMENT

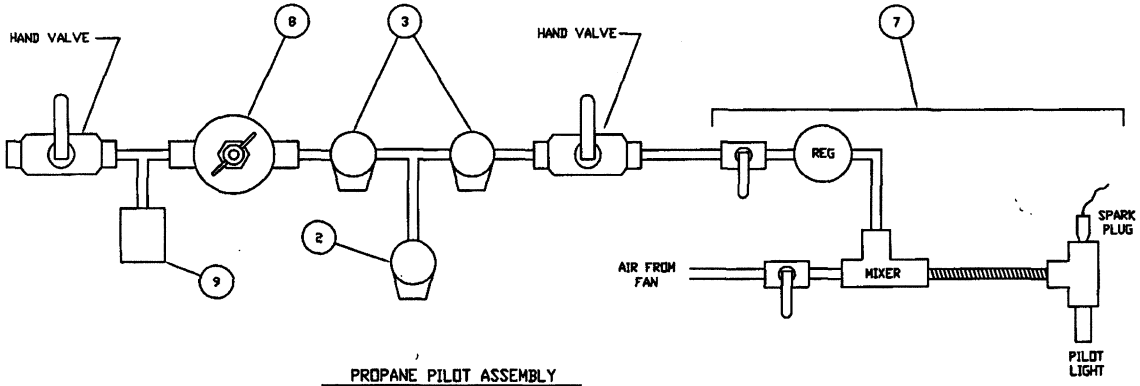

PROPANE PILOT ASSEMBLY

SHOWN AS SINGLE LINE ASSEMBLY FOR CLARITY
ACTUALLY BENDS TO FIT AROUND OTHER EQUIPMENT

PARTS LIST

FIG NO.	QTY	UNIT	NOMENCLATURE	MANUFACTURER CODE	PART NUMBER
1	1		VALVE, FUEL SHUT-OFF 1/2" NPT, 120 VAC MFR: ASCO P/N: 8256G153V 120VAC	88234	
2	1		VALVE, PROPANE VENT 1/2" NPT, 120 VAC MFR: ASCO P/N: 8215G23 120VAC	88234	
3	2		VALVE, PROPANE SHUT-OFF 1/2" NPT, 120 VAC MFR: ASCO P/N: 8215G23 120VAC	88234	
4	1		3/8" SERIES 8730 VRV VALVE, NORMALLY CLOSED SWINGING GATE VALVE FUEL: NO. 2 FUEL OIL BODY TRIM: 1-D TRIM BODY CONNECTION: ANSI THREADED MIN/FUEL AMBIENT TEMP: -25F TEMP LIMIT MAX FUEL TEMP: 250F/120C TEMP LIMIT MAX AMBIENT TEMP: 125F/50C TEMP LIMIT MOTOR VOLTAGE: 115V 60HZ MOTOR TIMING: 6 SECOND TIMING CLUTCH INPUT VOLTAGE: 115V 60 HZ ENCLOSURE RATING: NEMA 4 VDS SWITCH: VDS-2 SWITCH VCS SWITCH: VCS-1 SWITCH TOP ASSEMBLY POSITION: R RIGHT TO LEFT MOPD RATING: 300 MOTOR CURRENT: 1.3 AMPS CLUTCH CURRENT: 0.09 TIME DELAY: 0 AGENCY SANCTIONS: CGA, FM, UI MFR: MAXON P/N: .375"-8730-VRV	39006	
5	1		OIL FILTER, 3/8 NPT SIZE REF: HAUCK P/N 11843	27695	
6	1		REGULATOR, OIL PRESSURE, W/GAUGE REF: HAUCK MODEL PRO 3A P/N: 11290 (REGULATOR) & 10881 (GAUGE)	27695	
7	1		PILOT LIGHT IGNITION ASSY (IPG1412A) FOR HAUCK BURNER AND PLUG COVER (782-783-BAA4378A) REF: HAUCK P/N: 13741 & 4378 INTEGRAL PARTS MIXER REGULATOR VALVE (2 EA) SPARK PLUG FLEXIBLE TUBING	27695	
8	1		REGULATOR,		
9	1		SWITCH, PRESSURE, COMBINATION AIR, 0-20"WC, BUNA N DIAPHRAM AND O-RING W/1/4" NPTF ALUMINUM PRESSURE CONNECTION AND CAP, WEATHERPROOF ENCLOSURE REF: UNITED ELECTRIC MODEL 442 P/N: J400-95131	88234	
10	1		SWITCH, PRESSURE, 0-100 PSI, FUEL OIL, BRASS BELLOWS W/ 1/4" NPTF NICKEL-PLATED BRASS PRESSURE CONNECTION, WEATHERPROOF ENCLOUSRE REF: UNITED ELECTRIC MODEL 156 P/N: J400-9584	88234	

NOTES:

1. THESE ITEMS ARE FURNISHED AS AN ASSEMBLY UNDER THE HAUCK PART NUMBER 783. ADDITIONAL PARTS ARE LISTED FOR REPLACEMENT PURPOSES ONLY.

REGISTERED PROFESSIONAL ENGINEER
#146509
JERRY R. MILLER
STATE OF UTAH

NEXT ASSEMBLY

USED ON

TOLERANCES
UNLESS OTHERWISE SPECIFIED
DECIMAL
TWO PLACES +-
THREE PLACES +-
FRACTIONAL +- 1/64
ANGULAR +-

DRAWN STONY

CHECKED

ENG CHECK

PROJECT ENGR

REVISIONS

SYM	DATE	BY	DESCRIPTION	DRAWN	CHKD	APVD

DESIGNED

TOOELE ARMY DEPOT-ANNEX-AMD

DATEST APPROVED

DARCOM FIELD DATEST ACTIVITY

FINAL APPROVAL

ARMY-TOO-DE US ARMY ARCOM

US ARMY
ARMAMENT, MUNITIONS & CHEMICAL COMMAND
AMMUNITION PROGRAM EQUIPMENT

MAIN BURNER ASSY &
PROPANE PILOT ASSY

CAGE No. 21624 | SIZE F | HWI-PERMIT-10

DATE 16DEC06 | SCALE SHOWN | SHT 1 OF 1

PARTS LIST

ITEM NO.	QTY UNIT	DESCRIPTION	MANUFACTURER CODE	PART NUMBER

SEE DWG 1236MI-40 SHT 3 FOR PARTS LIST

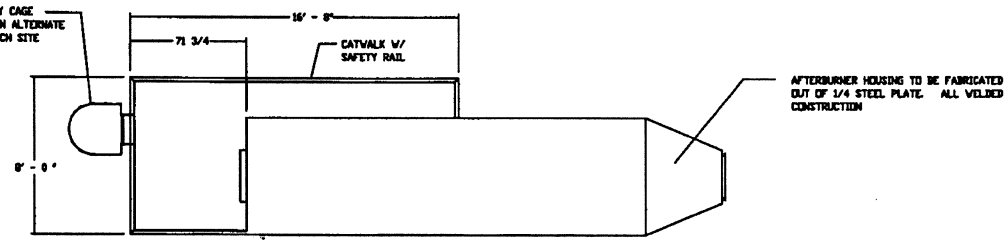

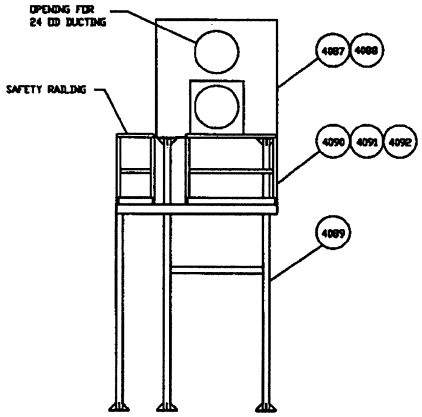

FURNACE SIDE

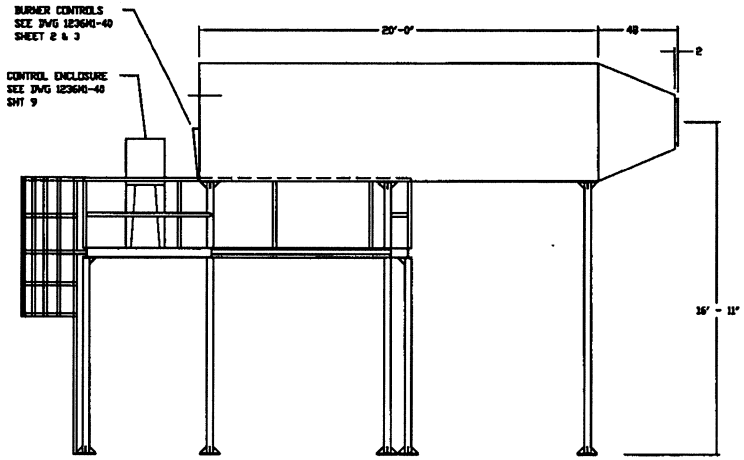

HIGH TEMP HEAT EXCHANGER SIDE

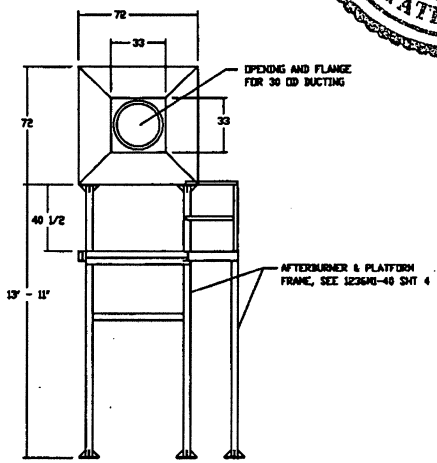

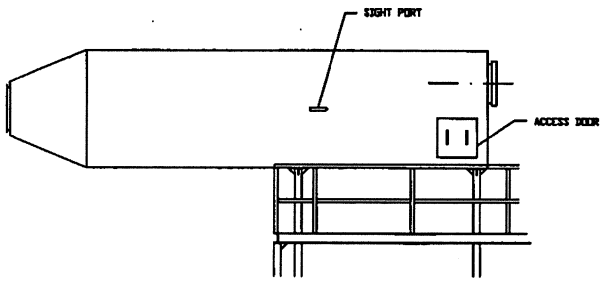

CATWALK SIDE

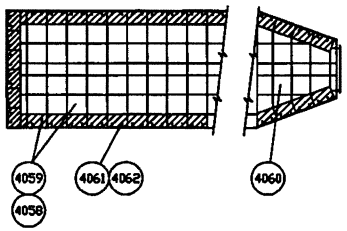

NOTES

1- SOME FURNACE SITES MAY REQUIRE AN OPPOSITE HAND CONSTRUCTION FROM THAT SHOWN AND ALTERNATE LOCATIONS OF LADDER/CAGE. MAKE NECESSARY ADJUSTMENTS IN FABRICATION TO ACCOMODATE THESE SITE SPECIFIC REQUIREMENTS.

2- DETERMINE SCREW, WASHER, AND NUT SIZES AND QUANTITIES AS NEEDED ON ASSEMBLY

DO NOT SCALE DWG

NEXT ASSEMBLY: 1236MI-01

USED ON

UNLESS OTHERWISE SPECIFIED

DRAWN: rgarcia

REV	DATE	BY	DESCRIPTION	SCALE	CHKD	APVD

REVISIONS

SUBMITTED: TOOELE ARMY DEPOT-ENHCD-ESD

SAFETY APPROVED: DANGER FIELD SAFETY ACTIVITY

FINAL APPROVAL: ARMY-DEPO-ED US ARMY ARDEC

US ARMY ARMAMENT, MUNITIONS & CHEMICAL COMMAND

AFTERBURNER ASSEMBLY

CAGE No. 21624 | REV F | HWI-PERMIT-17

DATE 9OCT99 | SCALE NONE | SHT 1 OF 1

REGISTERED PROFESSIONAL ENGINEER #146509 JERRY R. MILLER STATE OF UTAH

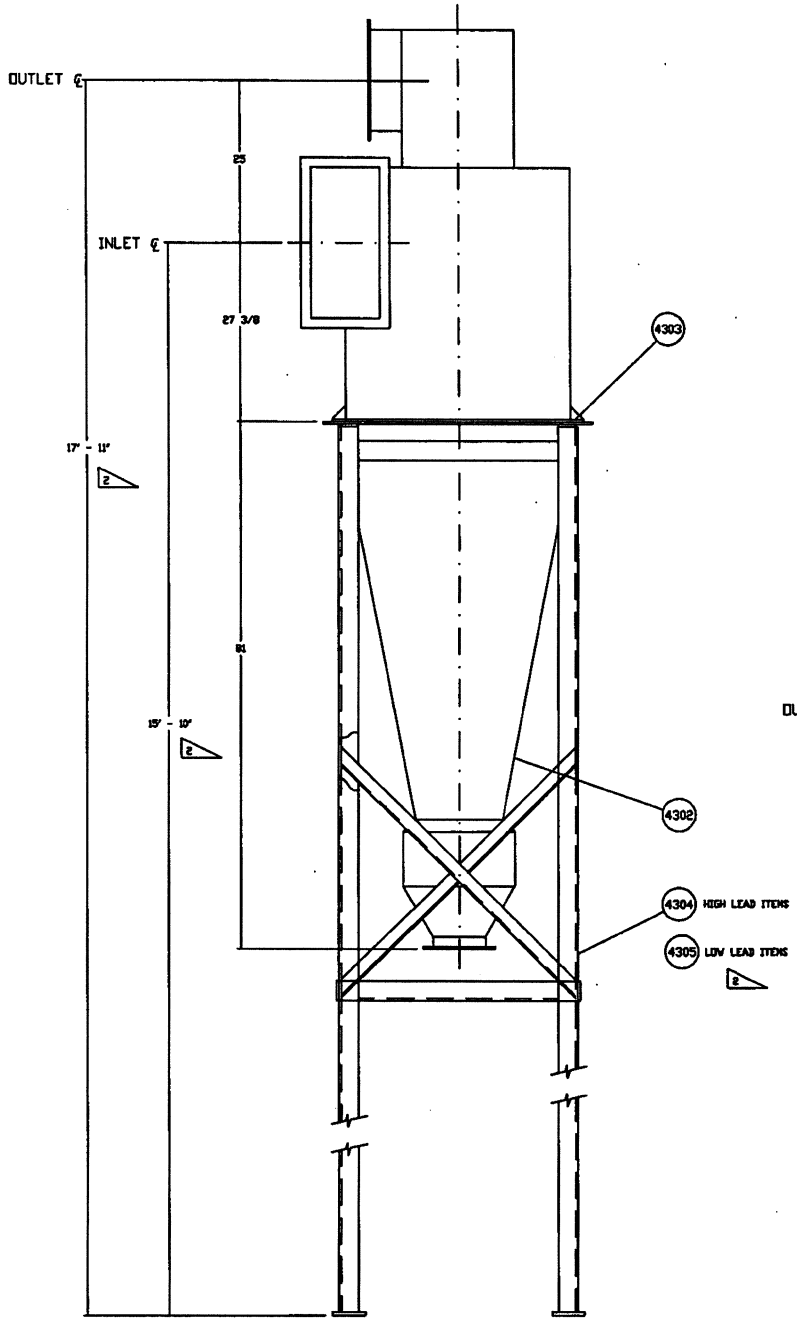

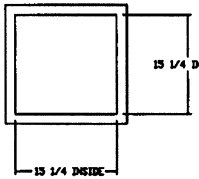

OUTLET

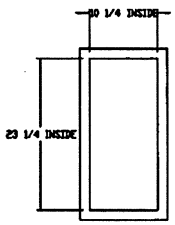

INLET

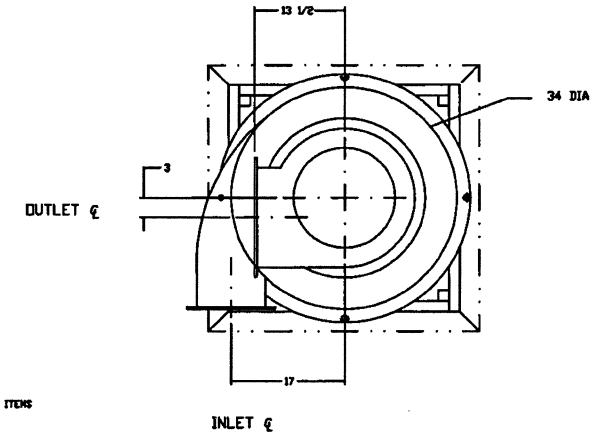

TOP VIEW

PARTS LIST

ITEM NO.	QTY	UNIT	NOMENCLATURE	MANUFACTURER CODE	PART NUMBER
			DO NOT REUSE THIS PART NUMBER 12364301 TO AVOID PART NUMBER DUPLICATION		
	1		CYCLONE DUST COLLECTOR, CENTRIFUGAL W/ INSPECTION DOOR, SIZE 165, TYPE VM REF: DUCON MODEL NO. 700/150		12364302
4303	4		CAPSCREW, HEX HEAD, STEEL DETERMINE SIZE MATCH CYCLONE		

PARTS LIST CONTINUED ON DWG 12364M-43 SHT 2

REGISTERED PROFESSIONAL ENGINEER
#146509
JERRY R. MILLER
13 Dec 01
STATE OF UTAH

NOTES:

1- CYCLONE SUPPORT FRAME TO BE ANCHORED WITH 1/2 DIA EXPANSION ANCHOR BOLTS

2 SOME FURNACE SITES WILL PROCESS ITEMS WITH HIGHER LEAD CONTENT AND MAY NEED TO MOVE THE CYCLONE AND ADD AN EXPANSION CHAMBER TO THE HIGH TEMP HEAT EXCHANGER. USE THE PROPER CYCLONE SUPPORT FRAME AS FOLLOWS:

HIGH LEAD CONTENT ITEMS

USE LOW PROFILE SUPPORT FRAME (ITEM 4304)

MAINTAIN 17' 11" HEIGHT FROM THE GROUND TO CENTER OF THE OUTLET FLANGE OF THE CYCLONE. PLACE CYCLONE BETWEEN THE FURNACE AND THE AFTERBURNER

LOW LEAD CONTENT ITEMS

USE HIGH PROFILE SUPPORT FRAME (ITEM 4305)

MAINTAIN 16' 11" HEIGHT FROM THE GROUND TO CENTER OF THE INLET FLANGE OF THE CYCLONE. PLACE CYCLONE BETWEEN THE HIGH TEMP HEAT EXCHANGER AND THE BAGHOUSE

DO NOT SCALE DWG

NEXT ASSEMBLY: 12364M-01

USED ON

TOLERANCES UNLESS OTHERWISE NOTED
DECIMAL: TWO PLACES +/- ; THREE PLACES +/- ; FRACTIONAL +/- 1/16 ; ANGULAR +/-

DRAWN: W & B INC.
CHECKED: PROJECT ENGR.
APPR CHECK: W & B INC.
PROJECT ENGR

REV.	DATE	BY	DESCRIPTION	ENGR	CHECK	APPROV

REVISIONS

PREPARED: TOOELE ARMY DEPOT-ENGINEERING
PROJECT APPROVED: DUGWAY PROVING GROUND PROJECT ACTIVITY
FINAL APPROVAL: ARMCOM-DRSAR-IMD TO ARMY ARCOM

US ARMY
ARMAMENT, MUNITIONS & CHEMICAL COMMAND
ARMAMENT PROJECT EQUIPMENT

CYCLONE
ASSEMBLY

CAGE No. 21624 | REV F | HWI-PERMIT-20

DATE 9OCT99 | SCALE 1:8 | SHT 1 OF 1

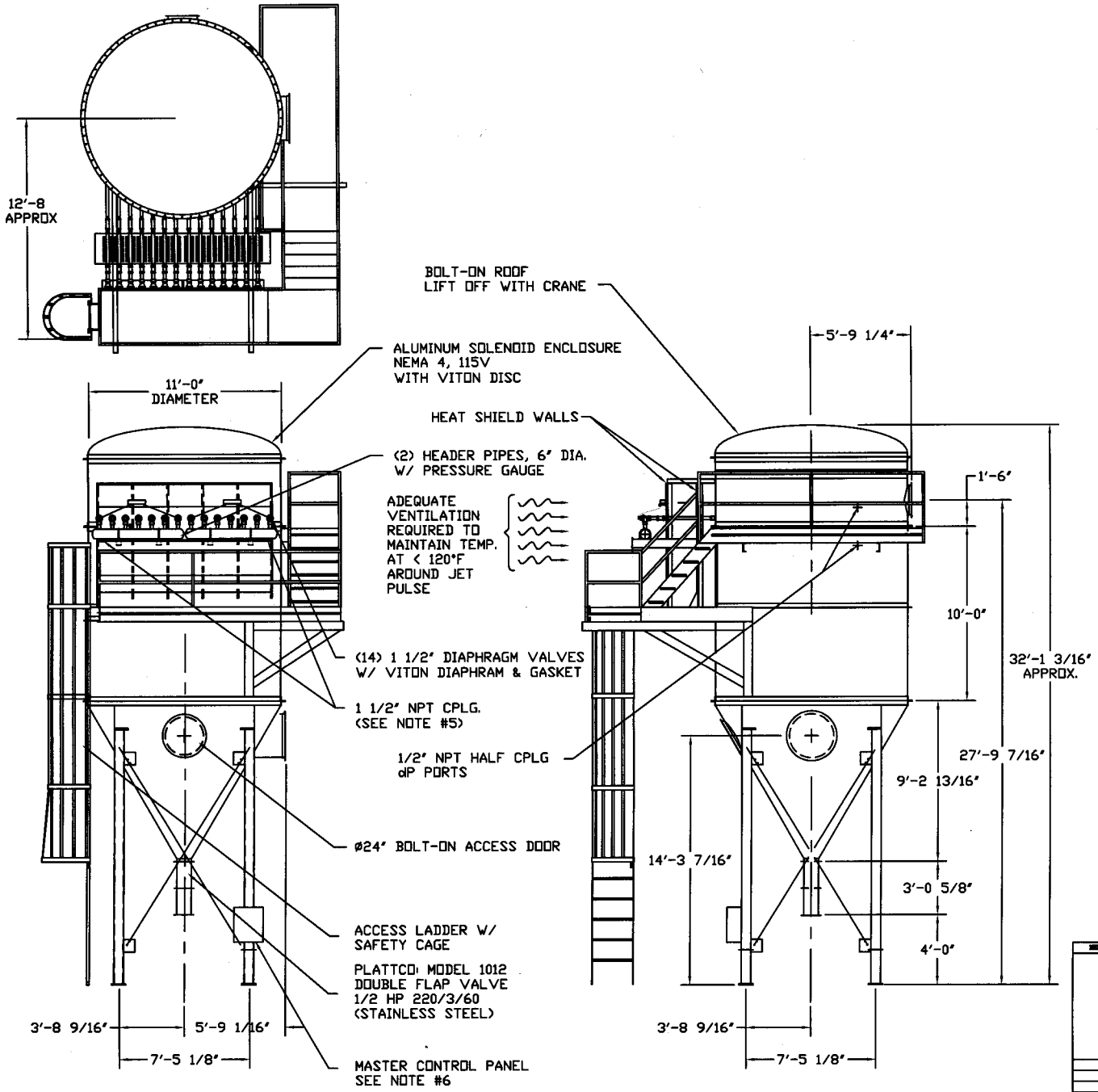

PARTS LIST

FIND NO.	QTY	UNIT	NOMENCLATURE	MANUFACTURER CODE	PART NUMBER

SPECIFICATIONS:

1. MODEL: CF-154-HC

2. CONSTRUCTION:
- DESIGN PRESSURE: -30" W.G.
- DESIGN TEMPERATURE: 1000°F MAX.
- DESIGN WIND SPEED: 130 MPH
- WALKWAYS & SUPPORT STEEL: CARBON STEEL
- EXTERIOR: CARBON STEEL
- WALLS: 7 GA. 304 SS
- TUBE SHEET: 5/16" PL. 304 SS
- BLOW TUBES: STAINLESS STEEL
- HEADER PIPE: STAINLESS STEEL
- DIAPHRAGM VALVES: ALUMINUM
- DIAPHRAGM PILOT: COPPER TUBING
- SOLENOID VALVES: ALUMINUM

3. PAINT: DELETED

4. CERAMIC FILTER ELEMENT:
- QTY: 136 - FILTER AREA: 2040 SQ. FT.
- MATERIAL: "CERAFIL" CERAMIC FILTER ELEMENT
- SIZE: 5 3/4" DIA. x 120" LG.
- VENTURIS: STAINLESS STEEL

5. COMP. AIR REQ'D: DELETED

6. MASTER CONTROL PANEL:
- NEMA 4 ENCLOSURE (MOUNTED TO SUPPORT LEG)
- ADJUSTABLE PULSE TIMERS, 115 VAC
- DISCONNECT SWITCH
- 208V MOTOR STARTER, FOR DOUBLE FLAP VALVE
- START STOP SWITCHES W/ LIGHTS FOR DOUBLE FLAP VALVE AND PULSE CONTROL
- PULSE CONTROL AND DOUBLE FLAP VALVE FACTORY WIRED

7. APPLICATION:
- PROCESS: INCINERATION
- MATERIAL: AMMUNITION
- LOCATION: OUTDOORS
- AIR VOLUME: 10,200 ACFM @ 1000°F
- AIR/CLOTH RATIO: 5.0/1

8. GROSS WEIGHT: DELETED

9. ITEMS ASSEMBLED FOR SHIPPING: DELETED

10. ITEMS SHIPPED SEPARATE: DELETED

PROFESSIONAL ENGINEER
No. 6895711-2202
DONALD FANNING
9/23/10
STATE OF UTAH

REV.	DATE	BY	DESCRIPTION	ZONE	CHKD	APPVD

REVISIONS

DRAFTER: T TATE

US ARMY
ARMAMENT, MUNITIONS & CHEMICAL COMMAND
AMMUNITION PECULIAR EQUIPMENT

CERAMIC BAGHOUSE

TOOELE ARMY DEPOT

CAGE NO. 21624 | SIZE F | HWI-PERMIT-21

DATE 21SEPT10 | SCALE | SHT 1 OF 1

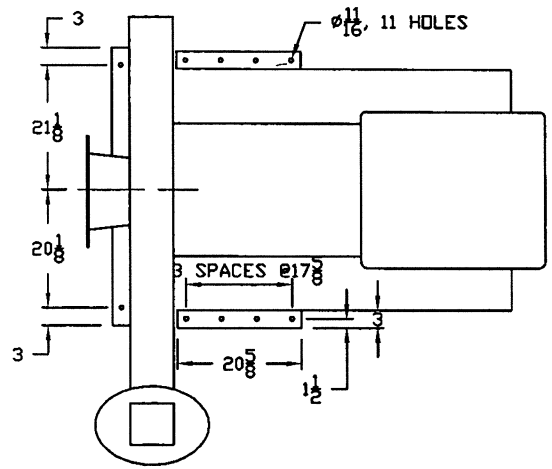

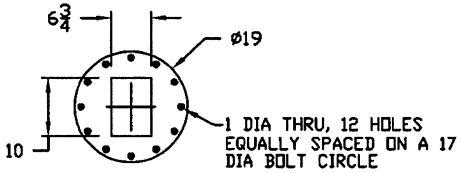

OUTLET FLANGE

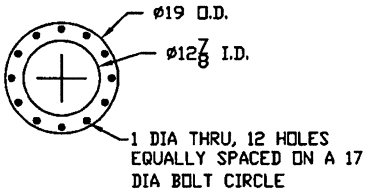

INLET FLANGE

PARTS LIST

FIND NO.	QTY	UNIT	NOMENCLATURE	MANUFACTURERS CODE	PART NUMBER
	1		FAN, 8500 CFM @ 35 INCHES V.G.S.P. RATING AT 0.0262 LBS/CU FT INLET DENSITY 3550 RPM, BHP - 79.5, 10 CAPACITY, 316 SST CONSTRUCTION, 1" NPT HOUSING DRAIN REF: FAN EQUIPMENT CO, INC 3925 WEST SUNSET ROAD LAS VEGAS, NV 89118 P/N H-21 I.E. ARR. 1 DWG# 2006405 WITH THE FOLLOWING REPLACEMENT PARTS		
	1		FAN MOTOR, 100 HP, 1800 RPM, 3 PHASE, 60 HZ, 460 VOLT, TEFC FR 405TS, 1.15 S.F. REF: RELIANCE ELECTRIC		
	2		BEARING, BALL, PILLOW BLOCK, HEAVY DUTY,		
	1		FLEXIBLE COUPLING W/ GUARD (DODGE)		
	1		SINGLE CARBON RING SHAFT SEAL (JOHN CRANE)		

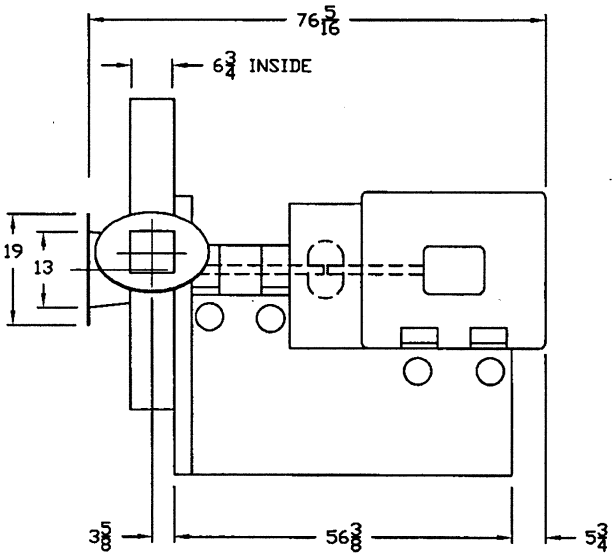

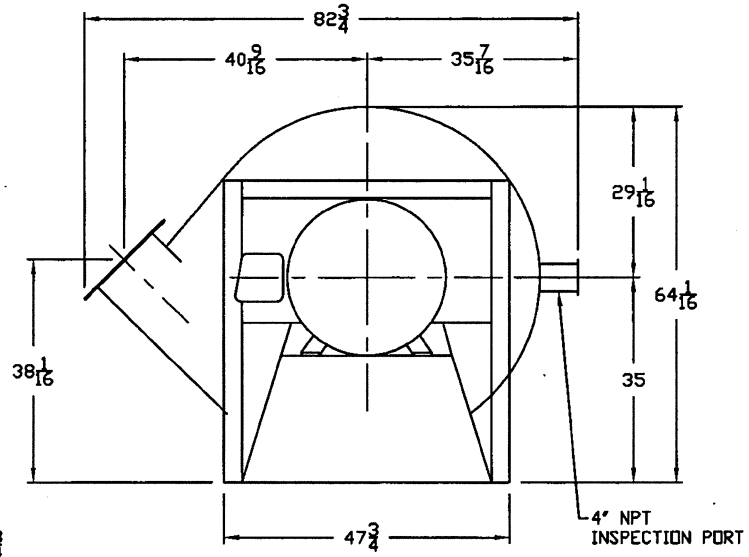

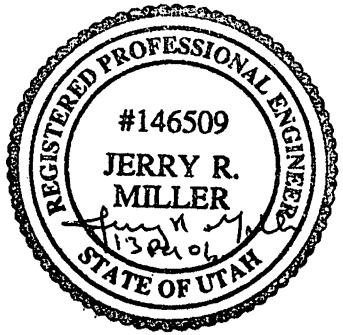

NOTES:

1- DIMENSIONS SHOWN ARE FOR REFERENCE ONLY. DRAFT FAN IS A COMMERCIALLY FABRICATED ITEM.

2- DRAFT FAN TO SECURED TO CONCRETE WITH 5/8 DIA EXPANSION ANCHOR BOLTS

DO NOT SCALE DWG

REV.	DATE	BY	DESCRIPTION	DRWN	CHKD	APPVD

REVISIONS

US ARMY
ARMAMENT, MUNITIONS & CHEMICAL COMMAND
ASSOCIATED PROGRAM EQUIPMENT

DRAFT FAN

CAGE No. 21624 | REV F | HWI-PERMIT-22

DATE 16DEC06 | SCALE 1 : 8 | SHT 1 OF 1

PARTS LIST				
FIND NO.	QTY REQ	NOMENCLATURE	MANUFACTURERS CODE	PART NUMBER

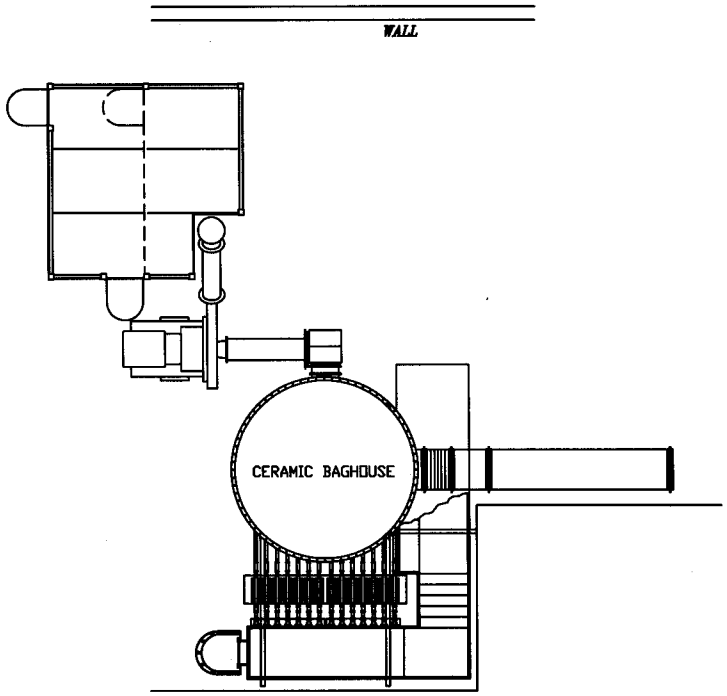

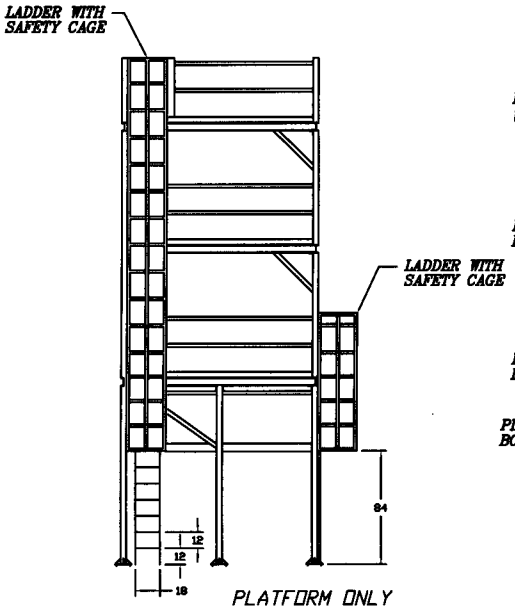

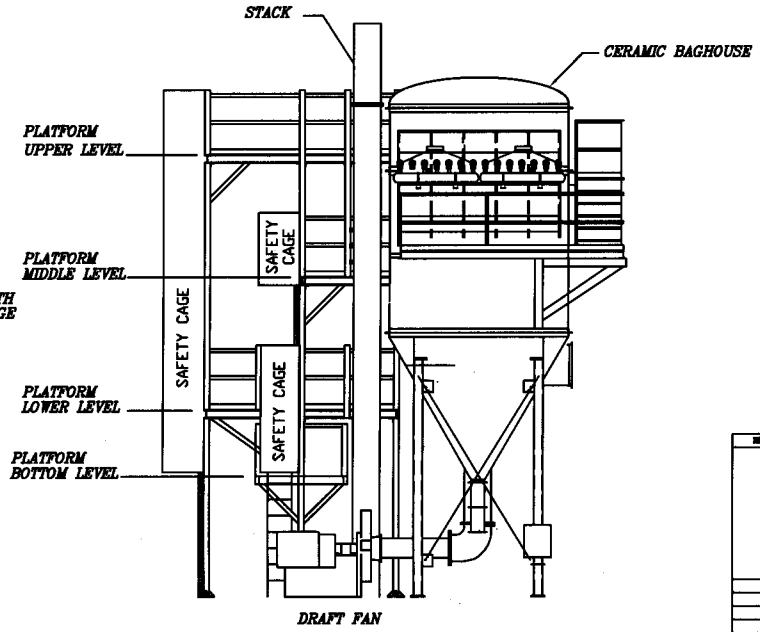

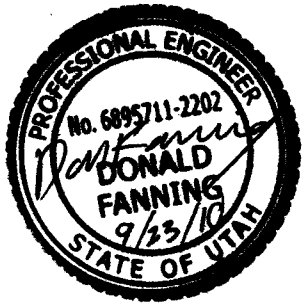

NEXT ASSEMBLY	TOLERANCES EXCEPT AS NOTED	REV.	DATE	BY	DESCRIPTION	ZONE	CHKD	APVD
	NOMINAL TWO PLACES +- THREE PLACES +- FRACTIONAL +- ANGULAR +-	REVISIONS						
USED ON	DRAWN T TATE TRACED APVD CHECK PROJECT CHGRS	SUBMITTED TOOELE ARMY DEPOT-CHEMO-ARD SAFETY APPROVED DUGWAY PROVING SAFETY AGENCY FINAL APPROVAL AMSMC-DRM-DO US ARMY ARDEC	US ARMY ARMAMENT, MUNITIONS & CHEMICAL COMMAND AMMUNITION PECULIAR EQUIPMENT					
			STACK PLATFORM TOOELE ARMY DEPOT W/ CERAMIC BAGHOUSE					
			CAGE No. 21624	SIZE F	HWI-PERMIT-23			
			DATE 21 SEPT 10	SCALE	SHT 1 OF 1			

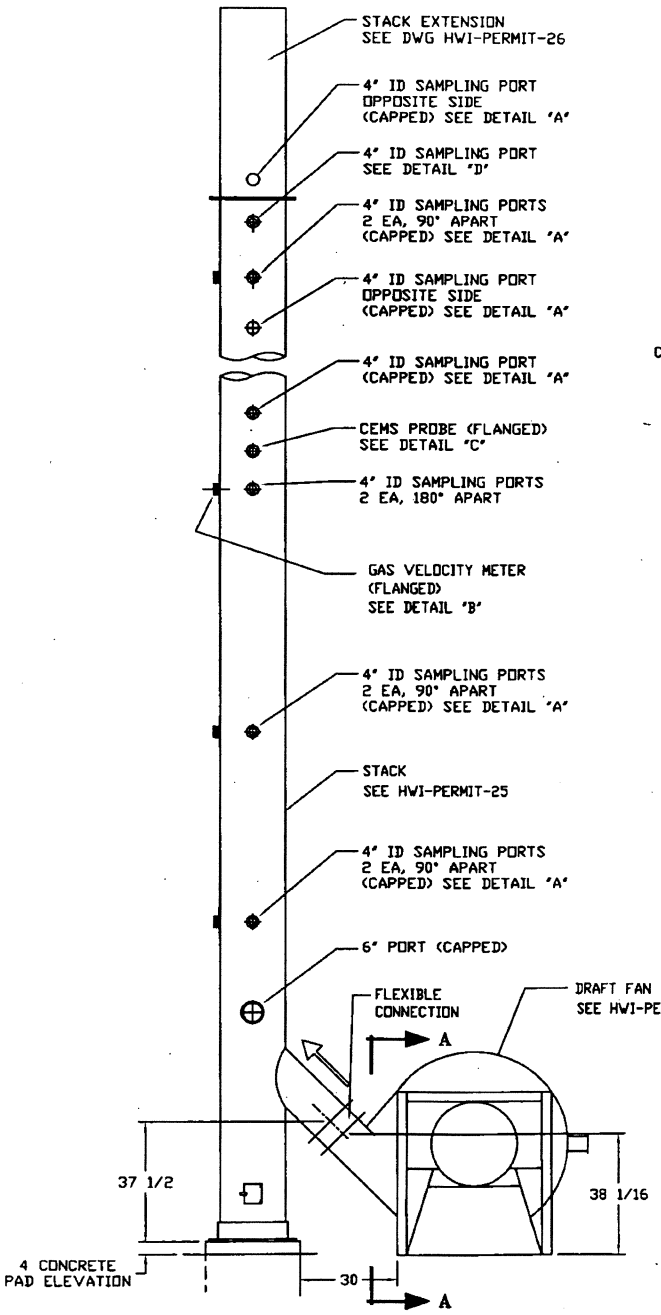

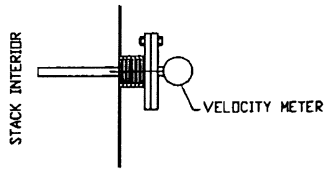

DETAIL "B"

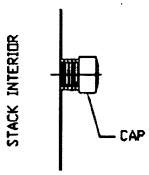

DETAIL "A"

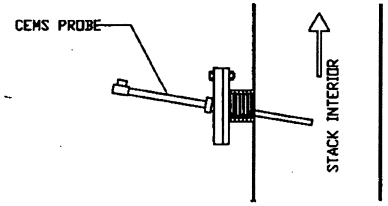

DETAIL "C"

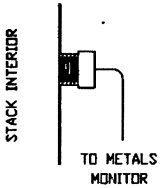

DETAIL "D"

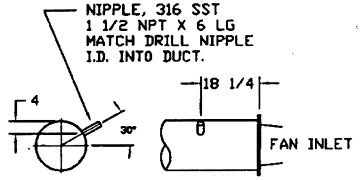

VIEW "A-A"

DRAFT FAN INLET DUCT

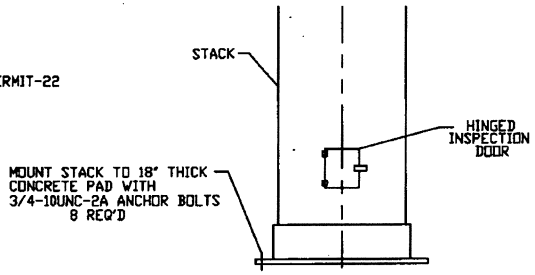

STACK MOUNTING DETAIL

REGISTERED PROFESSIONAL ENGINEER
#146509
JERRY R.
MILLER
STATE OF UTAH

PARTS LIST				
ITEM NO.	QTY REQ	NOMENCLATURE	MANUFACTURER CODE	PART NUMBER

DO NOT SCALE DWG

REV	DATE	BY	DESCRIPTION	ZONE	CHKD	APVD

REVISIONS

US ARMY
ARMAMENT, MUNITIONS & CHEMICAL COMMAND
ABERDEEN PROVING GROUND

EXHAUST STACK
PORT IDENTIFICATION

CAGE No. 21624 | REV F | HWI-PERMIT-24

DATE 17MAY07 | SCALE 1 : 16 | SHT 1 OF 1

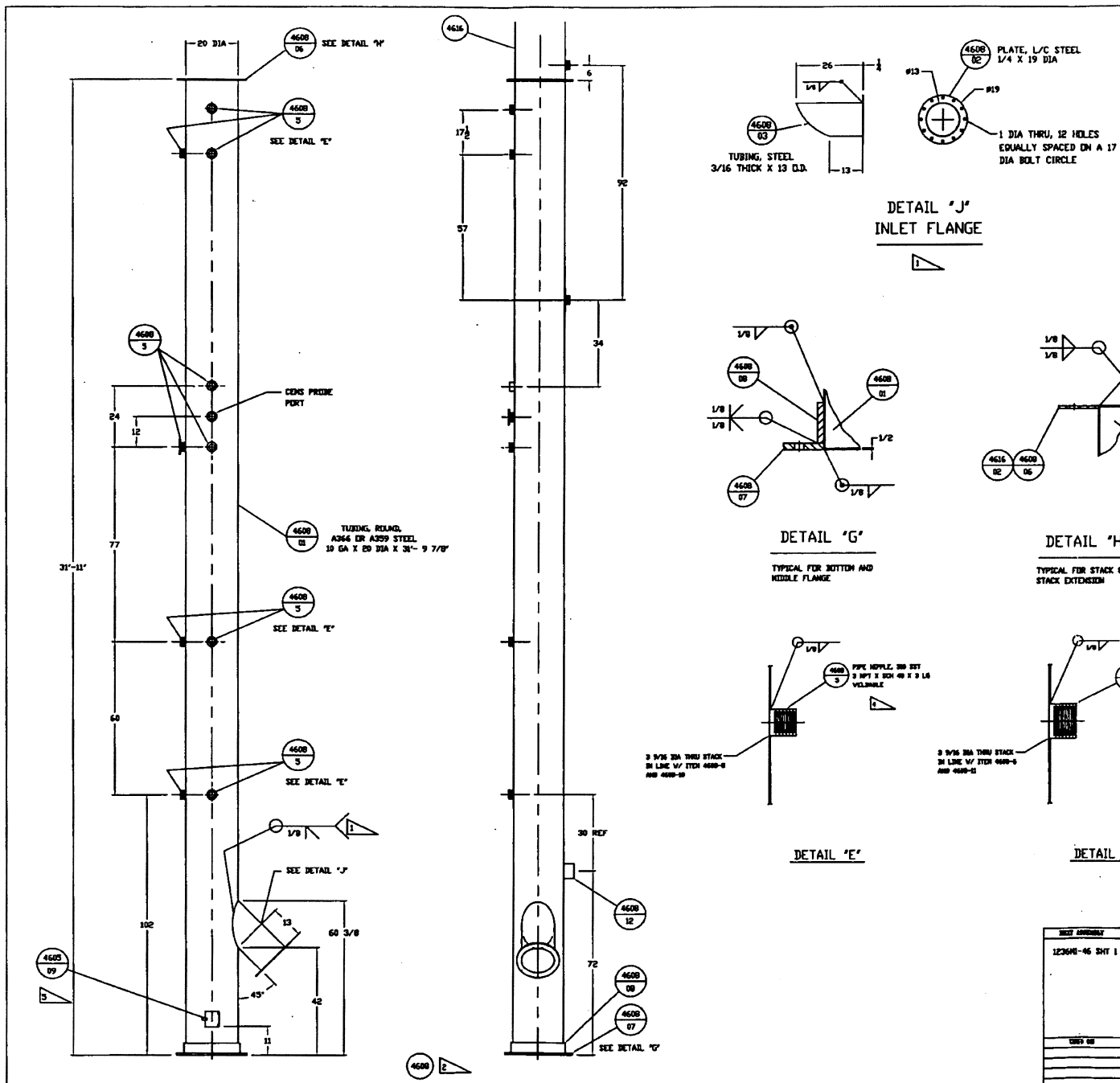

PARTS LIST

FIND NO.	QTY	UNIT	DESCRIPTION	MANUFACTURER CODE	PART NUMBER
4608-1 THRU 4608-12	1		STACK (WELDMENT)		1236M1-4608

PART NUMBERS SHOWN ARE FOR REFERENCE ONLY

SEE EXISTING APE 1236M1 DRAWING PACKAGE

NOTES

1. FABRICATE STACK INLET FLANGE APPROX AS SHOWN AFTER STACK AND DRAFT FAN HAVE BEEN LOCATED. INTERSECT (COPE) THE 13 DIA DUCT TO THE STACK @ 45°, WELD ALL AROUND. PROVIDE 13" WIDE OVAL CUTOUT IN THE STACK TO MATCH I.D. OF THE 13" DUCT (PRIOR TO WELDING)
2. ALL DUCT WELDS ARE TO BE FULL PENETRATION BUTT WELDS UNLESS OTHERWISE NOTED. STACK VERTICAL SEAMS TO BE ROTATED GREATER THAN 30° FROM ADJOINING VERTICAL SEAM.
3. CUT GASKET MATERIAL TO FIT AND BOND TO THE DRAFT FAN OUTPUT FLANGE AND STACK INPUT FLANGE
4. PIPE NIPPLE (F/N 4608-5 & 12) WILL BE MODIFIED AND/OR ASSEMBLED SO THAT IT WILL FIT THE CONTOUR OF THE EXHAUST STACK AND WILL NOT PROTRUDE INTO THE STACK
5. PROVIDE HINGE AND LATCH WITH INSPECTION DOOR (ITEM 4608-9). INSPECTION DOOR TO BE POSITIONED OVER A 5 1/2 X 5 1/2 CUTOUT THRU STACK WALL. WELDED CONSTRUCTION.

REGISTERED PROFESSIONAL ENGINEER
#146509
JERRY R. MILLER
10 Jan 08
STATE OF UTAH

DO NOT SCALE DWG

1236M1-46 SHT 1

REVISIONS

US ARMY
ARMAMENT, MUNITIONS & CHEMICAL COMMAND
ARMAMENTON PECULIAR EQUIPMENT

EXHAUST STACK DETAILS

CAGE No. 21624 | SIZE F | HWI-PERMIT-25

DATE 17MAY07 | SCALE 1 : 16 | SHT 1 OF 1

PARTS LIST

FIND NO.	QTY	UNIT	NOMENCLATURE	MANUFACTURER CODE	PART NUMBER
1	1		FLANGE, BLIND, CARBON STEEL, 3" 150 LB, MODIFIED AS SHOWN		
2	1		SAMPLE PROBE, SST REF: SOUTHERN TECHNOLOGIES		
3	1		TEE, PIPE, STEL, 150 LB 3/8 NPTF X 3/8NPTF X 1/4NPTF		

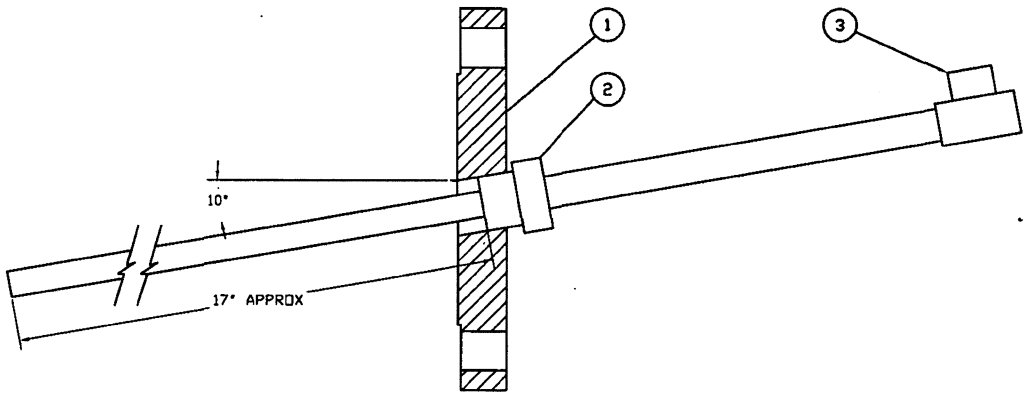

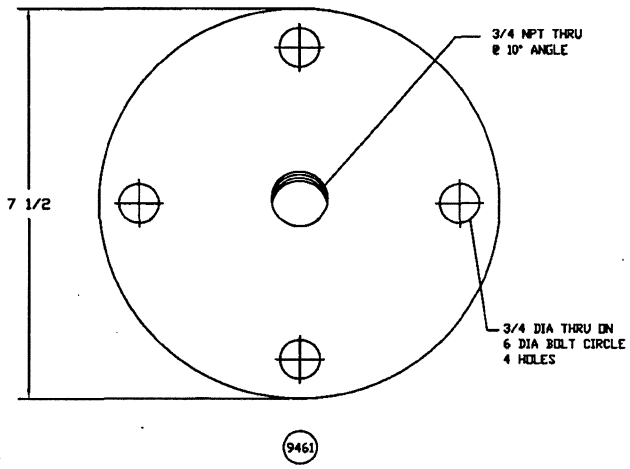

NOTES

1- USE TEFLON TAPE ON PIPE THREADS FOR TEMPERATURES LESS THAN 500° F. FOR SERVICE TEMPERATURES ABOVE 500° F USE JET LUBE NIKAL HIGH TEMPERATURE THREAD LUBRICANT OR EQUAL.

REGISTERED PROFESSIONAL ENGINEER
#146509
JERRY R. MILLER
STATE OF UTAH

NEXT ASSEMBLY: N/A

USED ON

TOLERANCES UNLESS OTHERWISE SPECIFIED
DECIMAL
TWO PLACES +-
THREE PLACES +-
FRACTIONAL +- 1/64
ANGULAR +- 0° 30'

DRAWN: Fgarcia
TRACED
SPEC WRIT.
DESIGN CHECK
DESIGN A TEST
PRODUCT COORD

REV.	DATE	BY	DESCRIPTION	ZONE	CHKD	APVD

REVISIONS

SUBMITTED
TOOELE ARMY DEPOT-SMCS-AE
SAFETY APPROVED
ARDEC SAFETY OFFICE
FINAL APPROVAL
ARMAD-DED-DE TO ARMY ARDEC

US ARMY
ARMAMENT, MUNITIONS & CHEMICAL COMMAND
ARMAMENT PROGRAM EQUIPMENT

GAS MONITORING
SAMPLE PROBE

CAGE No. 21624 | SIZE F | HWI-PERMIT-31

DATE 15APR01 | SCALE FULL | SHT 1 OF 1

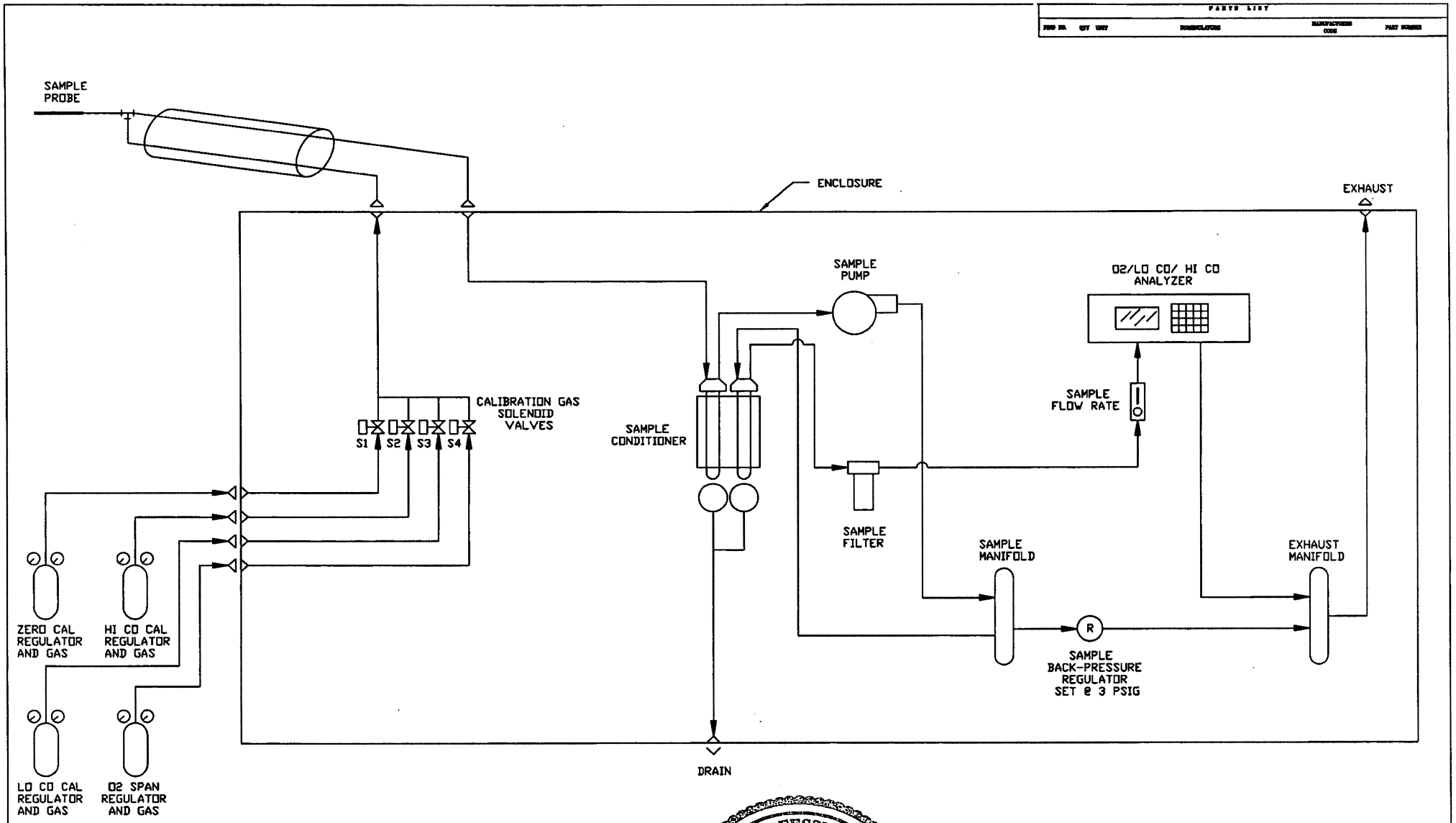

NOTES

◁▷ BULKHEAD FITTING

ALL TUBING TO BE TFE SIZED AS INDICATED

REGISTERED PROFESSIONAL ENGINEER
#146509
JERRY R. MILLER
STATE OF UTAH

PARTS LIST

FIND NO.	QTY	UNIT	NOMENCLATURE	MANUFACTURER CODE	PART NUMBER

REVISIONS

US ARMY
ARMAMENT, MUNITIONS & CHEMICAL COMMAND
AMMUNITION PECULIAR EQUIPMENT

CO & O2 MONITORING SAMPLE SYSTEM

CAGE No. 21624 | SIZE F | HWI-PERMIT-32

DATE 16DEC06 | SCALE NONE | SHT 1 OF 1

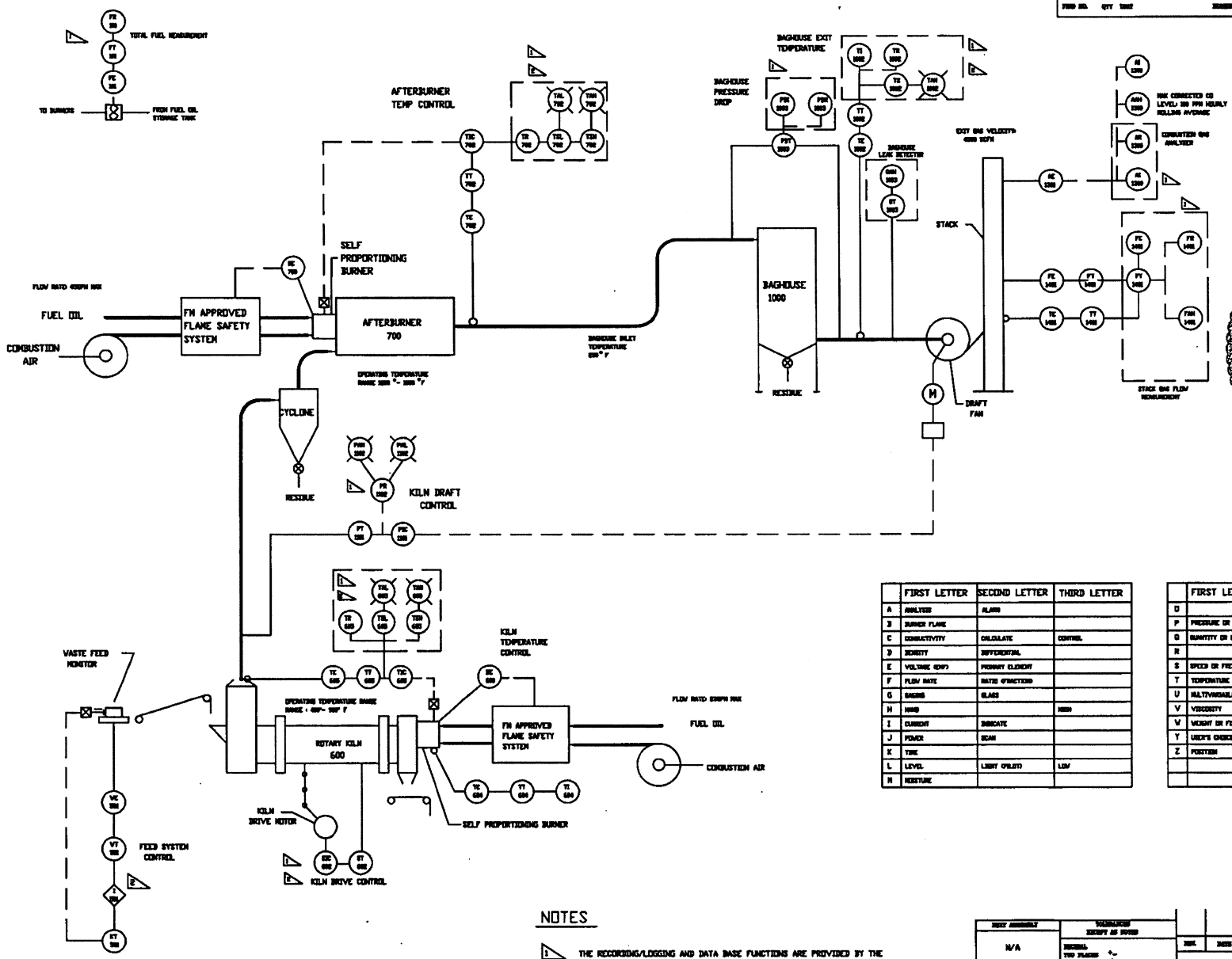

	FIRST LETTER	SECOND LETTER	THIRD LETTER
A	ANALYSIS	ALARM	
B	BURNER FLAME		
C	CONDUCTIVITY	CALCULATE	CONTROL
D	DENSITY	DIFFERENTIAL	
E	VOLTAGE (EMF)	PRIMARY ELEMENT	
F	FLOW RATE	RATIO (FRACTION)	
G	GAGING	GLASS	
H	HAND		HIGH
I	CURRENT	INDICATE	
J	POWER	SCAN	
K	TIME		
L	LEVEL	LIGHT (PILOT)	LOW
M	MOISTURE		

	FIRST LETTER	SECOND LETTER	THIRD LETTER
O		ORIFICE	
P	PRESSURE OR VACUUM	POINT	
Q	QUANTITY OR EVENT	INTEGRATE OR TOTALIZE	
R		RECORD OR PRINT	
S	SPEED OR FREQUENCY	SAFETY	SWITCH
T	TEMPERATURE	TRANSMIT	TRANSMIT
U	MULTIVARIABLE	MULTIFUNCTION	MULTIFUNCTION
V	VISCOSITY		VALVE
W	WEIGHT OR FORCE	WELL	
Y	USER'S CHOICE	COMPUTER	
Z	POSITION		DRIVE

NOTES

1. THE RECORDING/LOGGING AND DATA BASE FUNCTIONS ARE PROVIDED BY THE COMPUTER PORTION OF THE CONTROL SYSTEM
2. THE LOGICAL CONTROL FUNCTIONS ARE PROVIDED BY THE PROGRAMMABLE LOGIC CONTROLLER (PLC) PORTION OF THE CONTROL SYSTEM

REGISTERED PROFESSIONAL ENGINEER
#146509
JERRY R. MILLER
STATE OF UTAH

N/A

N/A

REVISIONS

US ARMY
ARMAMENT, MUNITIONS & CHEMICAL COMMAND

FURNACE CONTROL DIAGRAM

21624 F HWI-PERMIT-36

16DEC06 NONE 1 OF 1

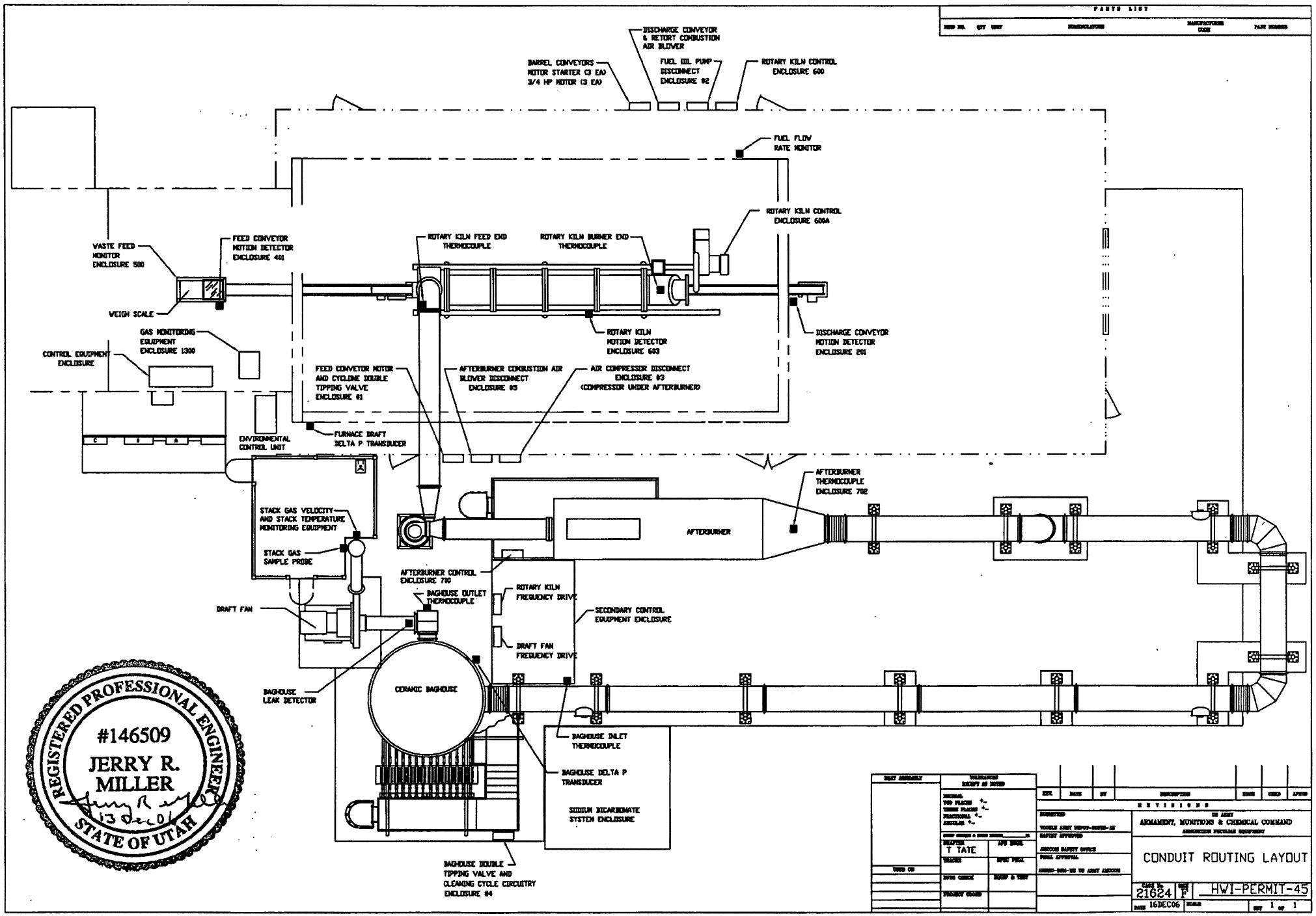
PARTS LIST
DISCHARGE CONVEYOR & RETORT COMBUSTION AIR BLOWER
BARREL CONVEYORS MOTOR STARTER (3 EA) 3/4 HP MOTOR (3 EA)
FUEL OIL PUMP DISCONNECT ENCLOSURE 02
ROTARY KILN CONTROL ENCLOSURE 600
FUEL FLOW RATE MONITOR
ROTARY KILN CONTROL ENCLOSURE 600A
WASTE FEED MONITOR ENCLOSURE 500
FEED CONVEYOR MOTION DETECTOR ENCLOSURE 401
ROTARY KILN FEED END THERMOCOUPLE
ROTARY KILN BURNER END THERMOCOUPLE
WEIGH SCALE
ROTARY KILN MOTION DETECTOR ENCLOSURE 603
DISCHARGE CONVEYOR MOTION DETECTOR ENCLOSURE 201
GAS MONITORING EQUIPMENT ENCLOSURE 1300
CONTROL EQUIPMENT ENCLOSURE
FEED CONVEYOR MOTOR AND CYCLONE DOUBLE TIPPING VALVE ENCLOSURE 01
AFTERBURNER COMBUSTION AIR BLOWER DISCONNECT ENCLOSURE 05
AIR COMPRESSOR DISCONNECT ENCLOSURE 03 (COMPRESSOR UNDER AFTERBURNER)
ENVIRONMENTAL CONTROL UNIT
FURNACE DRAFT DELTA P TRANSDUCER
AFTERBURNER THERMOCOUPLE ENCLOSURE 702
STACK GAS VELOCITY AND STACK TEMPERATURE MONITORING EQUIPMENT
AFTERBURNER
STACK GAS SAMPLE PROBE
AFTERBURNER CONTROL ENCLOSURE 700
BAGHOUSE OUTLET THERMOCOUPLE
ROTARY KILN FREQUENCY DRIVE
DRAFT FAN
SECONDARY CONTROL EQUIPMENT ENCLOSURE
DRAFT FAN FREQUENCY DRIVE
BAGHOUSE LEAK DETECTOR
CERAMIC BAGHOUSE
BAGHOUSE INLET THERMOCOUPLE
BAGHOUSE DELTA P TRANSDUCER
SODIUM BICARBONATE SYSTEM ENCLOSURE
BAGHOUSE DOUBLE TIPPING VALVE AND CLEANING CYCLE CIRCUITRY ENCLOSURE 04
REGISTERED PROFESSIONAL ENGINEER
#146509
JERRY R. MILLER
13 Dec 01
STATE OF UTAH
REVISIONS
US ARMY
ARMAMENT, MUNITIONS & CHEMICAL COMMAND
CONDUIT ROUTING LAYOUT
T TATE
21624
F
HWI-PERMIT-45
16DEC06
1 OF 1