RECEIVED
SEP 01 2004
04.03203
UTAH DIVISION OF
SOLID & HAZARDOUS WASTE

CLASS I AND IV SOLID WASTE LANDFILL PERMIT RENEWAL APPLICATION

for

SEVIER COUNTY
Sage Flat Landfill

August 2004

Prepared by

JONES & DEMILLE ENGINEERING
1535 South 100 West
Richfield, Utah 84701

RECEIVED
SEP 01 2004
04.03203
UTAH DIVISION OF
SOLID & HAZARDOUS WASTE

Table of Contents

Part I
Application

Part II
1.0 FACILITY GENERAL INFORMATION 1
1.1 General Description of Facility 1
1.2 Legal Description and Proof of Ownership 2
1.3 Area Served by Facility 2
1.4 Type of Facility and Waste 2
1.5 Construction Schedule 3

2.0 Land Use Compatibility 3
2.1 Geology 3
2.2 Surface Water 4
2.3 Wetlands 4
2.4 Groundwater 4

3.0 PLAN OF OPERATION 4

4.0 GEOHYDROLOGICAL ASSESSMENT 4
4.1 Regional Geology 4
4.2 Local Geology 5
4.3 Hydrogeology 6
4.4 Groundwater Quality 8
4.5 Surface Water 8
4.6 Water Rights 8
4.7 Site Water Balance Using Help Model 9
4.8 Leachate Collection System 10
4.8.1 Monitoring Free Liquids 10
4.8.2 Sampling Free Liquids 10

5.0 ENGINEERING REPORT 11
5.1 General 11
5.2 Location Standards 11
5.2.1 Land Use Compatibility 11
5.2.2 Geology 12
5.2.3 Seismic 12
5.2.4 Stability Analysis 12
5.2.5 Surface Water 12
5.2.6 Wetlands 13
5.2.7 Groundwater 13
5.3 Solid Waste Management Plan 13
5.4 Cell Design and Development 13
5.5 Leachate Collection 15
5.5.1 Grading 15
5.5.2 Leachate Collection Pipe 15
5.6 Run-On and Run-Off Control Systems 16

Part I

Utah Class I and V Landfill Permit Application Form

Landfill Type	☒ Class I ☐ Class V	Application Type	☐ New Application ☒ Renewal Application	☐ Facility Expansion ☐ Modification	

For Renewal Applications, Facility Expansion Applications and Modifications Enter Current Permit Number 9407R1

Facility Name and Location

Legal Name of Facility
Sevier County Sage Flat Landfil

Site Address (street or directions to site)				County
Located near Sigurd, off State Road 24				Sevier
City	State UT	Zip Code	Telephone	

Township 23S	Range 1W	Section(s) 3,4,9,10	Quarter/Quarter Section	Quarter Section

Main Gate Latitude 38 degrees 49 minutes 52.7 seconds	Longitude 111 Degrees 54	Minutes 17.5 seconds

Facility Ownership Information

Legal Name of Facility Owner
Sevier County
Address (mailing)
250 North Main

City Richfield	State UT	Zip Code 84701	Telephone 435-896-9262

Facility Operator Information

Legal Name of Facility Operator
Sevier County
Address (mailing)
250 North Main

City Richfield	State UT	Zip Code 84701	Telephone 435-896-9262

Property Owner Information

Legal Name of Property Owner
Sevier County
Address (mailing)
250 North Main

City Richfield	State UT	Zip Code 84701	Telephone 435-896-9262

Contact Information

Owner Contact Doug Peterson		Title Commissioner	
Address (mailing) 250 North Main			
City Richfield	State UT	Zip Code 84701	Telephone 435-896-9262
Email Address		Alternative Telephone (cell or other)	

Operator Contact Rex Conder		Title Manager	
Address (mailing) 250 North Main			
City Richfield	State UT	Zip Code 84701	Telephone 435-896-9262
Email Address		Alternative Telephone (cell or other)	435-979-7535

Property Owner Contact Doug Peterson		Title Commissioner	
Address (mailing) 250 North Main			
City Richfield	State UT	Zip Code 84701	Telephone 435-896-9262
Email Address		Alternative Telephone (cell or other)	

Utah Class I and V Landfill Permit Application Form

Part I General Information (Continued)

VIII. Waste Types (check all that apply)

	Waste Type	Combined Disposal Unit	Monofill Unit
☒	Municipal Waste	☐	☒
☒	Construction & Demolition	☐	☒
☐	Industrial	☐	☐
☐	Incinerator Ash	☐	☐
☒	Animals	☐	☒
☒	Asbestos	☐	☒
☐	PCB's (R315-315-7(3) only)	☐	☐
☐	Other	☐	☐

IX. Facility Area

Facility Area	460	acres
Disposal Area	66	acres
Design Capacity		
Years	40	
Cubic Yards	2,825,000,	
Tons	1,412,500	

X. Fee and Application Documents

Indicate Documents Attached To This Application

☐ Application Fee: Amount $ N/A

☒ Facility Map or Maps ☒ Facility Legal Description ☒ Plan of Operation ☒ Waste Description

☒ Ground Water Report ☒ Closure Design ☐ Cost Estimates ☒ Financial Assurance

Class V Special Requirements

☐ Documents required by UCA 19-6-108(9) and (10)

I HEREBY CERTIFY THAT THIS INFORMATION AND ALL ATTACHED PAGES ARE CORRECT AND COMPLETE.

Signature of Authorized Owner Representative: Doug Peterson

Doug Peterson
Name typed or printed

Title: Commissioner

Date: 8/27/04

Address: 250 North Main, Richfield, UT 84701

Signature of Authorized Land Owner Representative (if applicable): Doug Peterson

Doug Peterson
Name typed or printed

Title: Commissioner

Date: 8/27/04

Address: 250 North Main, Richfield, UT 84701

Signature of Authorized Operator Representative (if applicable)

Rex Conder
Name typed or printed

Title: Manager

Date: 8/25/04

Address: 250 North Main, Richfield, UT 84701

Part II

1.0 FACILITY GENERAL INFORMATION

In 1994, Sevier County constructed the Sage Flat Landfill, which is a non-commercial Class I Municipal Solid Waste and Class IV landfill to provide for the waste disposal needs of Sevier County. The Utah Solid and Hazardous Waste Control Board issued the first permit to Sevier County on March 22, 1994. The current permit will expire on October 31, 2004. This application is to renew the facility's permit.

1.1 General Description of Facility

The Sage Flat Landfill receives municipal solid water from all areas of Sevier County. The original expected life of the landfill was 20 years with a capacity of 1,500,000 cubic yards of waste. The landfill design has had modifications and its capacity is now approximately 2,825,000 cubic yards of waste. The current expected life of the landfill is estimated to be over 40 years.

The landfill site occupies approximately 460 acres of property. Within the site is located a Class I landfill, a Class IV landfill, a maintenance building, a tire and white goods (refrigerators, water heaters, other appliances, etc.) collection area, dead animal pit and access roads. The entire site has been surveyed and marked to ensure that all facilities are within the boundaries of the property.

The landfill is located at Sage Flat, a remote, narrow, north-south trending valley, approximately four miles east of Sigurd, Utah (see Figure 1). Sage Flat is located in a semi-arid region of Utah receiving an average annual precipitation of less than 10-inches. The valley within the proposed landfill boundaries is approximately 3,000 feed wide before meeting the steep slopes of the Cedar Mountains to the east and the more gentle sloping mountains to the west. The surface topography in the area of the Class I site is relatively flat and slopes gently to the south. South of the Class I site, the valley narrows and the surface topography slopes down about 80 feet before reaching the flat lying area of the Class IV site, where the valley widens again (see Figure 2). The Sage Flat soils are derived from alluvium and alluvial fans revealing sequences of silty clays, silts, silty sands and gravels with occasional cobbles. The upper-most aquifer that underlies the site occurs in the unconsolidated alluvium under water-table (unconfined) conditions. Depth to the groundwater under the proposed Class I and IV site is approximately 165 and 94 feet below the ground surface, respectively. The land use of adjacent properties to the Sage Flat Landfill boundary are designated as grazing, recreating and forestry (GRF-1).

The Class I landfill utilizes the trench mound method, excavating trenches below the natural ground surface. A total of seven trenches are planned and will range from 1,400 to 2,100 feet long with a top width of 200 feet. The maximum total depth of each trench will be about 61 feet. The trench bottom will be excavated a maximum of 40 feet below the natural ground surface. The trenches will be constructed in a sequential order from north to south. At the present time, the first cell is being filled with solid waste.

The landfill site is secured with barbed wire and chain link fences around most of the boundary. However, there is high relief terrain on the southeast portion of the site and there is no fencing in that area.

There is a paved access road from State Road 24 to the landfill entrance. There are gravel roads within the landfill site to provide access to the various disposal areas.

The landfill has an equivalent design, which is based on the State Rules. The clay liner design includes the installation of one leachate collection pipe in the middle of each of the landfill trenches. The bottom liner slopes at 2 percent toward the center of the trench to facilitate collection of any potential leachate in the pipe.

The Class IV (construction and demolition debris) landfill is located in the southern portion of Sage Flat. The Class IV landfill has been fenced to prevent unauthorized entrance and must be accessed from the main gate. The entrance to the landfill site is located at approximately 1600 feet south of the northwest corner of Section 3, Township 23 South, Range 1 West, SLBM. A maintenance building is located just inside the entrance and is used for the gatehouse. Access roads provide access to the Class IV landfill, maintenance building and Class I landfill. The entrance gate is locked when the landfill is closed. Drainage diversion channels have been constructed around the perimeter of the landfill to prevent surface drainage from entering the landfill.

1.2 Legal Description and Proof of Ownership

The Sevier County Sage Flat Solid Waste Landfill is located in Lots 3 through 6, 12, and the West ½ of the Southwest ¼ of Section 3; Lots 1, 9, 10 and the East ½ of the Southeast ¼ of Section 4; the Northeast ¼ of the Northeast ¼ of Section 9 and the West ½ of the Northwest ¼ of the Northwest ¼ of Section 10 of Township 23 South, Range 1 West, SLBM approximately four miles east of Sigurd, Utah. The site occupies approximately 460 acres of property. In 1994, Sevier County purchased the property from the Bureau of Land Management (BLM). A copy of the recorded deed is included in Appendix A.

1.3 Area Served by Facility

The Sage Flat Landfill serves the residents and businesses within the boundaries of Sevier County. Sevier County has an area of 1,978 square miles. Sevier County is located in Central Utah and is mainly a rural, agricultural county. Richfield City is the county seat and is located along Interstate 70. From the 2000 Census, the population of Sevier County was estimated to be 18,842. The current population of Sevier County is estimated to be about 20,420.

1.4 Type of Facility and Waste

The Sage Flat Landfill is a non-commercial landfill owned and operated by Sevier County. The landfill receives municipal solid waste generated with the boundaries of Sevier County.

The landfill is permitted to receive Class I and Class IV waste. A Class I Landfill is permitted by the Solid and Hazardous Waste Control Board to receive for disposal the following:

(a) municipal solid waste;
(b) any other non-hazardous solid waste, not otherwise limited by rule or solid waste permit; and
(c) in conjunction with municipal solid waste or other non-hazardous solid waste, waste from a conditionally exempt small quantity generator of hazardous waste, as defined by Section R315-2-5 of the State of Utah Solid Waste Rules.

A Class IV Landfill is permitted by the Solid and Hazardous Waste Control Board to receive for disposal the following:

(a) construction/demolition waste;
(b) yard waste;
(c) inert waste;
(d) dead animals, as approved by the Executive Secretary and upon meeting the requirements of Section R315-315-6 of the State of Utah Solid Waste Rules;
(e) waste tires and materials derived from waste tires, upon meeting the requirements of Section19-6-804 and Section R315-320-3; or
(f) Petroleum contaminated soils, upon meeting the requirements of Subsection R315-315-8(3).

1.5 Construction Schedule

The Sage Flat Landfill is an existing facility already in use. The initial facilities for the Sage Flat Landfill were constructed in 1994 and 1995. The landfill started to receive waste in 1995 and has continued to operate since that time. Improvements and maintenance work on the facilities are completed as necessary for the continued operation of the landfill.

2.0 Land Use Compatibility

The landfill is located in a remote area of Sevier County with a land use designation of GRF-1 (Grazing, Recreation, and Forestry). No existing structures are in the immediate vicinity of the landfill site. Due to the distance of the site from any population, there is not expected to be any problems with complaints of odor or aesthetics of the landfill.

2.1 Geology

The landfill site is located in a small, gently sloping basin. The basin receives runoff from the surrounding hills and therefore is filled with alluvium to substantial depths. Local geological conditions are outlined in subsections 4.2 and 4.3. The soil profile at the site consists of interbedded layers of silty clay, silt, silty sand, and gravel.

2.2 Surface Water

There are no perennial streams that discharge into the basin. Several intermittent streams flow into the Sage Flat basin from the surrounding drainage basins. Drainage structures to control run-on from the 25 year/24 hour precipitation have been constructed at the landfill site. The drainage structures consist of diversion channels that follow the perimeter of the landfill site, and culverts which convey the flow under the access and equipment roads.

2.3 Wetlands

There are no wetlands located in the vicinity of the site, therefore the landfill will not adversely affect the wetland environment or any wildlife associated with wetlands.

2.4 Groundwater

Groundwater at the site has been encountered at a depth of 165 feet below the ground surface in the area of the Class I site. The aquifer below the site is not used for drinking water. The TDS of the aquifer ranges from 590 to 1100 mg/l which classifies the groundwater as Class II. The groundwater information is included in Appendix B.

Based on a search of the records of the Utah Division of Water Rights, the nearest well is approximately 2.5 miles from the site and is used to water stock. The water rights information is included in Appendix C. Water travel times for this magnitude of distance is expected to be longer than 250 days.

3.0 PLAN OF OPERATION

The purpose of the Plan of Operation is to provide a written description of the daily operation of the Sevier County Sage Flat Landfill. A landfill is a dynamic system which undergoes regular development. Changes may occur in types and quantities of disposal materials, demographics of the service area, or administrative and regulatory requirements. These changes need to be reflected in the manner in which the landfill is operated to conserve landfill space and protect human health and the environment. The intent of the Plan of Operation is to provide an accurate description of the daily operations and procedures while allowing for modification which may be required to compensate for operational changes. The current Plan of Operation is included in Appendix D.

4.0 GEOHYDROLOGICAL ASSESSMENT

4.1 Regional Geology

Sage Flat Landfill is located on the eastern boundary of the Central Sevier Valley approximately three miles east of Sigurd, Utah. The Central Sevier Valley is defined as part of the larger Sevier River Valley, between the town of Kingston on the south and the

Yuba Dam on the north and is divided by geological conditions into five individual groundwater basins. The Sage Flat Landfill is located in the Sevier-Sigurd basin. The valley lies within the High Plateaus section of the Colorado Plateau physiographic province and is bordered on the east by the Sevier, Fishlake, Wasatch and Gunnison Plateaus, and on the west by the Tushar and Valley mountains and the Pavant Range (see Figure 3, Physiographic Setting).

The Sevier, Fishlake, Wasatch and Gunnison Plateaus reach elevations of more than 11,000 feet, whereas the Tushar and Valley mountains and the Pavant Range reach elevations that range between 8,000 and 12,000 feet (Young and Carpenter 1965).

The generalized stratigraphy of exposed consolidated rock formations within the Central Sevier Valley begin with the Navajo Sandstone Formation of Triassic age and include most of the formations found in southern Utah to the Sevier River Formation of Pliocene or Pleistocene age. Formations older than the Navajo have little or no effect on the groundwater potential in the Central Sevier Valley (Young and Carpenter 1965).

The unconsolidated rocks that make up the valley fill are of Pleistocene and recent age and are the main source of groundwater obtained from wells in the Central Sevier Valley.

Structural features of the Central Sevier Valley floor include a synclinal trough modified by a graben formed by the two main faults in the area, the Sevier fault on the east and the Elsinore fault on the west. The Sevier fault is characterized as a normal fault with the downdrop on the west and forms the western edge of the Sevier Plateau. The fault has been traced from northern Arizona to Glenwood in the Central Sevier Valley of Utah, but it probably extends northward to the vicinity of Sigurd. The vertical displacement on this fault has been measured from a few hundred feet near Glenwood to nearly 6,000 feet near Monroe. The Elsinore fault, also a normal fault, can be traced along the west side of the valley from Elsinore to the area west of Aurora. The vertical displacement of the fault ranges from about 500 feet to 1,000 feet with at lease half of the fault scarp buried beneath the alluvium of the valley. Many smaller normal faults also are in the area cutting across hills and plateaus surrounding the Central Sevier Valley floor, many of which are part of the larger north-trending fault zones. A regional geologic map and cross-section are provided on Figures 4 and 5.

The landfill site is located in the northeast portion of the Sevier-Sigurd basin, which is situated in the Central Sevier Valley beginning from the mouth of Marysvale Canyon near the town of Sevier to a constriction in the valley at Rockyford Reservoir, near Sigurd.

4.2 Local Geology

The landfill site is located at Sage Flat, a small north-south trending valley resting on the western margin of the Sevier Plateau. Sage Flat is bounded to the east by the step slopes of the Cedar Mountains, which reach a local elevation of about 7,000 feet. The slopes outcrop with volcanic rock consisting of tuff, rhyolite and basaltic breccia of Miocene age. The volcanic rock reaches a thickness of 7,000 to 13,000 feet. Sage Flat is bounded to the west by more gentle sloping mountains which consist of the Arapien Shale formation of upper Jurassic age which reach an elevation of approximately 6,000 feet.

The Arapien Shale is a red and gray shale and fine grained sandstone containing salt and gypsum. These sedimentary rocks reach a maximum thickness of 10,000 feet. Sage Flat soils are derived from alluvium and alluvial fans composed of clays and silts and of poorly sorted to well sorted sands and gravels with occasional boulders deposited by the intermittent streams and slope wash from eroding nearby mountains. Figure 2 shows the topography of Sage Flat revealing the flat lying areas where the proposed Class I and IV sites are to be located.

The geomorphologic makeup of the Sage Flat Valley is typical of intermontane basins, although on a smaller scale, receiving sediment through alluvial processes from the surrounding mountains. The Arapien Shale Formation has provided much of the fine grain material that has been deposited in the Sage Flat Valley. The flat lying area at the Class I landfill site appears to be partially closed in by alluvial fan deposits to the south, which has made it a natural bowl, ideal for the accumulation of the fine grain soils. Exploratory drill holes DH-5 and DH-8, located in the area of the Class I landfill site, encountered silty clay in the upper 20 feet. Based on the geomorphic setting of this flat lying area, clay thickness is estimated to exceed 40 feet.

The classic alluvial fan system just discussed, immediately south of the Class I landfill area, consists of two converging alluvial fans, a larger one entering the valley from the east and a smaller fan entering from the west.

4.3 Hydrogeology

Sage Flat Landfill is located in a semi-arid region of Utah. The average annual precipitation at the site is 8.57-inches based on data collected from 1928 to 1992 at Richfield, Utah (Utah Climate Center). The average annual evaporation from open-water bodies in the Central Sevier Valley is more than six times the long-term mean annual precipitation (Young and Carpenter 1965).

The alluvial sediments that fill the adjacent Sevier-Sigurd Basin have a maximum known depth of more than 800 feet and consist of interbedded silt, sand and gravel. Although the total depth of alluvial fill at Sage Flat is unknown, the sediment profile is similar to the Sevier-Sigurd Basin consisting of interbedded silt, silty clay, sand and gravel to depths of at least 180 feet as identified in the drill hole log of MW-2. The surrounding mountains and outcrops, identified as the Cedar Mountains to the east, the Arapien Formation mountainous outcropping to the west and the hydrogeologic divide to the immediate north, define the hydrogeologic boundaries for the shallow aquifer system that underlies the site. These consolidated bedrock formations are generally considered groundwater barriers, retarding underflow from basin to basin. These hydrogeologic conditions suggest that the Sate Flat and Sevier-Sigurd Basin aquifer systems are not interconnected.

In 1993 before the landfill was constructed, Bingham Environmental performed a field investigation at the Sage Flat Site that included the drilling and installation of two monitor wells (MW-1 and MW-2) and five exploratory drill holes (DH-2, DH-3, DH-4, DH-5, and DH-8). Exploratory drill hole DH-2 and monitor well MW-2 were drilled near the base of two converging alluvial fans and the subsurface indicated sequences of silt, clay, sand with occasional gravel and cobbles. Exploratory drill holes MW-1, DH-3,

and DH-4, located in the southern portion of the site of the proposed Class IV landfill, indicates that the upper 30 feet consist primarily of silts and clays, with occasional sands and rhyolitic gravel. From 30 to 85 feet a very stiff to hard, slightly sandy silty clay was encountered with occasional gypsum. At 85 feet a moist, dense silty sand layer was encountered which grades wet at a depth of 92 feet. The drill logs and monitor well completion details, performed by Bingham Environmental, Inc., are provided in Appendix E.

Physical laboratory testing of selected soil samples was performed by Bingham Engineering's material testing laboratory. The testing consisted of Atterberg limits, moisture and density determination, grain size analysis, and permeability testing. In addition, the University of Utah Earth Science Laboratory characterized the mineralogy of the silty clay material from DH-5 and DH-8 using x-ray diffraction analysis. The physical laboratory testing results are provided in Appendix F.

Both insitu and recompacted permeability testing was performed on the silty clay material from the Class I landfill site. Insitu testing of the silty clay indicates a permeability of 2.2×10^{-6} cm/sec. The recompacted silty clay material showed permeabilities between 2.2×10^{-8} and 3.8×10^{-8} cm/sec. The mineralogic makeup of the clay consisted mainly of calcite (35%), quartz (20%), plagioclase (14%) with minor percentages of illite-smectite, illite+mica, goethite, smectite and gypsum.

Groundwater occurs under both artesian (confined) and water-table (un-confined) conditions in the Central Sevier Valley. Artesian conditions prevail in the central and downstream parts of the basins, where permeable beds of gravel and sand are confined by overlying beds of silt and clay. Water-table conditions usually prevail along the sides and at the upper ends of the basins. Groundwater occurrence in the Sage Flat basin appears to be consistent with major basins of the Central Sevier Valley, with groundwater occurring under water-table conditions in permeable beds of gravel and sand.

The principal sources of recharge to the alluvium in the Central Sevier Valley are the Sevier River and its tributaries, irrigation canals and infiltration from irrigated fields. Some groundwater also infiltrates the alluvium from bedrock sources surrounding the valley. Unlike the major basins in the Central Sevier Valley, the Sage Flat basin does not have a major river, irrigation canals or irrigated fields to provide recharge to its alluvium. The principle sources of recharge, therefore, are likely to occur by direct precipitation within the basin and from surface runoff from the surrounding slopes. Infiltration into exposed rock outcrops, which have permeable areas that readily absorb precipitation, convey the water to the basin through the down sloping aquifer.

An unconfined aquifer is present below the Sage Flat Landfill that extends at least through the upper 180 feet of alluvial deposits. The groundwater surface is relatively deep at the site with the groundwater surface at a depth of 165 feet below the Class I landfill (see Drill Hole Log MW-1 in Appendix E) and below the Class IV landfill the groundwater surface is at a depth of approximately 92 feet (see Drill Hole Log MW-2 in Appendix E).

Regionally, the groundwater is assumed to follow the slope of the ground surface; therefore, groundwater flow is to the south.

4.4 Groundwater Quality

The groundwater from the shallow aquifer that underlies the Sage Flat Landfill was being used for domestic or industrial use until the landfill was constructed. Review of the Utah Division of Water Rights records within a three mile radius of the site indicates that the closest wells, with the exception of the newly installed monitor wells constructed as part of the site characterization investigation, are located approximately 2.5 miles to the south and southeast.

Groundwater samples were collected from monitor wells MW-1 and MW-2 and analyzed for Total Dissolved Solids (TDS). In addition, the MW-1 sample was analyzed for the monitoring constituents listed in Section R315-308-4(1) of the Rules. Laboratory results indicate TDS levels in MW-1 and MW-2 of 590 mg/l and 1100 mg/l, respectively. Several heavy metal constituents in MW-1 were found to be above EPA MCL's, including barium, cadmium, chromium and lead. Based on these results, the groundwater would not be fit for domestic use unless treated. The results of the groundwater analysis for the monitoring wells are in Appendix B.

The groundwater classification system established in the State of Utah Groundwater Quality Protection Regulations designates the shallow groundwater as Class II Drinking Water Quality Groundwater, based on total dissolved solids (TDS) greater than 500 mg/l and less than 3000 mg/l.

During the construction of the landfill facilities, a well was drilled near the location of the main entrance. The well was drilled to a depth of 250 feet and the static water level was at a depth of approximately 165 feet. The well water was tested for volatile organic compounds, inorganic and metals. The well log and water analysis results are included in Appendix B. The well water has a TDS content of 826 mg/l and sodium content of 234 mg/l. The well water is not used for drinking. The well water is used for the restroom in the maintenance building and for dust control and moisture conditioning for compaction of soils.

4.5 Surface Water

An intermittent stream is located adjacent to the site with flows occurring only during moderate to large precipitation events and spring runoff. The site is located near the top of the drainage basin and therefore the flows expected from the intermittent stream are quite small.

4.6 Water Rights

The records of the Utah Division of Water Rights were reviewed to locate wells and other water rights within the vicinity of the landfill. A search was completed for wells and water rights within a three-mile radius of the landfill site. The only wells or other water rights located immediately in the area of the landfill site are the landfill monitoring wells and landfill well. The next closest water rights are over two miles from the landfill. Those water rights are for wells and surface waters for irrigation, stock watering, and wildlife watering. The nearest public drinking water sources are about three miles or more from the landfill. The results of the water rights search are included in Appendix C.

4.7 Site Water Balance Using Help Model

The amount of water that will percolate through a landfill and eventually reach the water table is a function of the amount of water applied to the landfill surface, the evaporation at the site, the permeability characteristics of the landfill, and the soil profile. The HELP model was used by Bingham Environmental to estimate the amount of precipitation that would percolate through the soil profile.

Landfill performance was modeled using conservative values of climatological data, soil profile characteristics and surface drainage. The following assumptions were made for input into the HELP model:

- HELP is used to model post-closure conditions
- Precipitation from the wettest 5 consecutive years on record for Sigurd, Utah
  Average monthly temperatures from entire period of record
- Use evaporation values in database (Milford, Utah)
- Depth to water table is 165 feet
- Modeling period – 20 years

The average annual precipitation, used in HELP, was calculated using the average monthly precipitation for the wettest five years at Sigurd and the synthetic rainfall simulation option in HELP. The average precipitation was calculated at 10.47 inches. Based on this precipitation, HELP calculates the water balance for the site, which includes; evapotranspiration, runoff, percolation, and change in water storage for the subsurface soils. Average annual values for 20 years for evapotranspiration was 8.9-inches annually with a runoff of 0.01-inches per year. Percolation through the vadose zone below the landfill was 0.29-inches. No infiltration through the bottom liner of the waste cell was calculated to occur. This is attributed to the low moisture conditions of the site and waste and the placement of clay cover and liners.

Additional modeling was performed to identify potential impacts to groundwater which may result from operations at active or open cells. The approach to open cell modeling in this case is conservative and is based on the remote possibility that the entire trench cell would be completed with a intermediate cover as the trench is developed. Two modeling runs were performed; the first run assumed that the entire trench would be covered with an intermediate cover, and the second run evaluated the infiltration from the active working face.

The modeling of the intermediate cover assumes an 18-inch compacted clay layer over the top of the waste layer. This clay layer is assumed to exhibit a hydraulic conductivity of approximately $1x10^{-6}$ cm/sec. No topsoil or vegetative cover is included in this modeling analysis. Average annual values for evapotranspiration was 5.58 inches with a runoff of 4.93 inches per year. Infiltration through the bottom liner of the waste cell was calculated to be 0.29 inches per year and percolation through the vadose zone below the landfill was calculated to be zero. These results should be considered very conservative due to the assumption in the model that the intermediate cover would not include a vegetative or topsoil layer for the entire 20 year period of the model.

The modeling of the active working face of the landfill assumes a working face with no soil cover and a maximum potential area of 18,000 sq. ft. The exposed waste is assumed to have a hydraulic conductivity of approximately 2 x 10^{-4} cm/sec. No topsoil vegetative cover or clay cover was included in this particular modeling analysis. Average annual values for evapotranspiration was 10.22 inches annually with a zero runoff. Infiltration through the bottom liner of the waste cell was calculated to be 0.29 inches per year and percolation through the vadose zone below the landfill was calculated to be zero.

Based on the results of these two modeling analyses, the available moisture infiltrating into the vadose zone over a 20 year period is below the field capacity of the subsurface soils. The HELP model results are provided in Appendix G.

4.8 Leachate Collection System

The Sage Flat Landfill design is based on the equivalent design criteria; therefore, leachate monitoring will be used to monitor the potential leachate from the landfill cells. One leachate collection pipe will be installed in the middle of each landfill trench. The bottom liner slopes at 2 percent toward the center of each trench to the location of the leachate collection pipe.

4.8.1 Monitoring Free Liquids

The leachate collection and cleanout pipe are monitored periodically for the presence of free liquids. Initially, the collection pipe are checked monthly for the first year. If no free liquids are detected after the first year of monitoring, monitoring will then be performed on a quarterly basis.

The leachate collection pipe will be monitored by removing the cover, and lowering electric well probe into the standpipe to determine if free liquids exist.

If and when free liquids initially appear in the collection pipe, the Department of Environmental Quality will be notified.

Free liquid will not be allowed to build up in the collection pipe to a level less than 12 inches below the top of the bottom liner. The collection pipe will be purged of free liquids when they are detected unless a sampling event is planned and the volume is being accumulated to provide adequate sample volume for analysis. Purging will be performed using a submergible pump.

4.8.2 Sampling Free Liquids

Sampling of free liquids will follow established EPA sampling protocol. The leachate collection pipes will be sampled semi-annually unless free liquid is not present in the standpipe. Sampling will be performed using a peristaltic pump or bailer.

Initially, when free liquids appear, a sample will be collected without purging, if the flow rate appears to be low, and submitted for chemical analysis. Based on the flow rate, additional sampling events will be proposed to characterize the free liquid (leachate).

5.0 ENGINEERING REPORT

5.1 General

Engineering designs were developed for the Sage Flat Landfill based on the State Solid Waste Rules. Existing engineering and scientific data were reviewed and incorporated into the design. Specific site investigations were performed to assess the feasibility of the site and surrounding region to support and maintain the solid waste facility design. Based on the available information and operations at the Sage Flat area, this facility will have minimal impacts to the quality of human and environmental health and safety for the surrounding area.

The site is located in a remote region and will have insignificant impacts to surface and groundwater supply or quality. The upgradient surface water and groundwater supply is minimal and is only partially used. The area is completely surrounded by hillsides which provide both visual and security controls.

The average annual precipitation is less than 10 inches/year. The operation and design of the landfill facility will provide the necessary controls to minimize the long term impacts to the surrounding area. The closure and post closure designs will minimize the run-on and run-off of surface drainage and reduce any potential development of leachate generation which would infiltrate to the underlying groundwater.

The nearest aquifer underlying the Class I Landfill is relatively deep, approximately 165 feet below ground surface. The total dissolved solids for the groundwater ranges from 500 mg/l to 1100 mg/l.

The design of the liner system is based on: the depth and the quality of the groundwater; the low annual precipitation for the site, and; the equivalent design requirements of the Rules. The landfill utilizes a trench-mound design. The trenches will be constructed with low permeable clay bottom liners at a slope of 2 percent. Leachate collection pipes will be installed below the bottom liner to monitor and collect any potential leachate. Modelling of potential leachate generation indicates that no infiltration will be detected through the underlying native clay liner for at least the first twenty years of the post closure period: therefore, the bottom liner and cover design should provide adequate protection of the relatively deep groundwater system.

5.2 Location Standards

5.2.1 Land Use Compatibility

The landfill is located in a remote area of Sevier County with a land use designation of GRF-1 (Grazing, Recreation and Forestry). No existing structures are in the immediate vicinity of the site. Due to the distance of the site from any population, there is not expected to be any problems with complaints of odor or aesthetics of the landfill.

5.2.2 Geology

The landfill site is located in a small, gently sloping basin. The basin received runoff from the surrounding hills and therefore is filled with alluvium to substantial depths. Local geological conditions are outlined in subsections 4.2 and 4.3. The soil profile at the site consists of interbedded layers of silty clay, silt, silty sand and gravel.

5.2.3 Seismic

Municipal landfills must be designed to withstand seismic accelerations if they are located in a *seismic impact zone*. A seismic impact zone is defined as an area with a 10% or greater probability that the maximum horizontal acceleration in lithified material will exceed 0.10 g in 250 years (Solid Waste Rules). According to Algermissen et al. (1990), there is a 10% probability of ground acceleration exceeding 0.43 g in a 250 year period at the landfill site. The Sevier County landfill is located in an seismic impact zone and has been designed to account for the effects of earthquake accelerations.

Sevier valley is bordered by two faults, the Sevier fault to the east and the Elsinore fault on the west side of the valley. The Rules require that the facility may not be located within 200 feet of a Holocene fault. The nearest fault, according to Young (1965), is located approximately 3000 feet due east. This fault is believed to be a minor fault and is assumed not to be a segment of the Sevier fault.

Since the post-construction landfill cells will be at approximately the same grade as the existing ground, waste cell structural integrity problems associated with seismic accelerations are not expected. Because the groundwater is located at a considerable depth, liquefaction of the foundation soils is not an issue.

5.2.4 Stability Analysis

The stability of the trench walls has been modeled using PCSTABL5M, a computer program developed to model the stability of slopes that experience earthquake accelerations. A horizontal earthquake acceleration of 0.43 g was used in the stability modeling. Soil cohesion values that were assumed for the silty clay soil at the Sage Flat site were obtained from field pocket penetrometer measurements. Values of cohesion from the field pocket penetrometer measurements were on the order of 4500 psf, which is typical of a hard clay. However, a conservative cohesion of 2500 psf was used in this stability modeling. Native clay is mixed with the solid waste throughout daily placement. Therefore, a conservative cohesive value was estimated for the solid waste/soil mixture.

The minimum factor of safety computed by PCSTABL5M for the disposal trench during an earthquake was 1.8. The input and output files for the PCSTABL5M are included in Appendix H.

5.2.5 Surface Water

There are no perennial streams that discharge into the basin. Several intermittent streams flow into the Sage Flat basin form the surrounding drainage basins. Drainage structures to control run-on from the 25 year/24 hour precipitation event have been constructed at

the landfill site. The drainage structures consist of diversion channels that will follow the perimeter of the landfill site, and culverts which convey the flow under the access and equipment roads. The site hydrology calculations completed by Bingham Engineering are included in Appendix I.

5.2.6 Wetlands

There are no wetlands located in the vicinity of the site, therefore the landfill will not adversely affect the wetland environment or any wildlife associated with wetlands. No threatened or endangered species are known to exist in area of, or immediately surrounding, the landfill site.

5.2.7 Groundwater

Groundwater at the site has been encountered at a depth of 165 feet below the ground surface in the area of the Class I site. The aquifer below the site is not used for drinking water. The TDS of the aquifer ranges from 590 to 1100 mg/l which classifies the groundwater as Class II. Additional groundwater information is included in Section 4.4, Appendix B, Appendix C, and Appendix, D.

When the original landfill permit was issued in 1994, Sevier County was given an exemption from groundwater monitoring. Based on the site conditions and landfill design, it appears this exemption status should remain.

5.3 Solid Waste Management Plan

It is anticipated that the landfill will continue to receive waste from all of Sevier County for more than the next 20 years. The current population of Sevier County is estimated to be about 20,420. The current capacity of the Sage Flat Landfill is calculated to be 2,825,000 cubic yards. The total area of the site is approximately 460 acres. The waste is disposed using a trench-mound method.

5.4 Cell Design and Development

The Class I Landfill disposal cells are being constructed as trench-mound cells. There are seven trenches planned, ranging in length between 1,400 and 2,100 feet. The first trench is in use. The maximum depth of each trench below ground surface is 40 feet at the center of the length of the trench. The depth decreases towards each end of the trench due to the 2 percent slope on the bottom liner. The 2 percent slope of the bottom liner slopes towards the center of each trench at the location of the leachate collection system. The trenches will be mounded about 21 feet above the natural ground surface. The maximum total depth of the cells will be about 61 feet.

The bottom width of the trench will be 100 feet and the width of the top of the trench will be about 200 feet. The sideslopes vary from 1 horizontal to 2 vertical and 2 horizontal to 1 vertical. Field investigations indicate that there is a silty clay zone of soil to depths of at least 20 feet below the surface. Silty clay soil should provide the slope stability necessary for the temporary 1:2 sideslopes. The sideslopes may be flattened at the discretion of the landfill operator, to maintain stability of the slopes. Berms will be

located adjacent to the top of the vertical slopes to maintain an adequate safe distance of personnel and vehicular traffic from the top of the slope. The berms will be constructed of the temporary stockpiled material excavated from the topsoil layer and the excavated trench. Berms will be located an adequate distance away from the edge of the trench to avoid any stability problems.

The cells will be constructed in an orderly sequence from north to south. The natural ground surface elevation at the northern most cell (cell 1), located at the northern end of the site, is approximately 5842 feet. The natural ground surface elevation at the southern most cell (cell 7) is approximately 5828 feet. The final elevation of the maximum cover section of the cell will be approximately 21 feet greater than the existing ground surface elevation at the center of the cell. The final cover will be graded to a minimum 3 percent slope extending from the center of the cell across the width of the cell.

The trenches will be constructed in a phased approach. The phases will include: (1) marking the boundary of the area to be excavated; (2) striping and stockpiling the topsoil layer for future final cover; (3) excavation of the trench for disposal and waste placement; (4) intermediate cover over the full disposal cell; (5) placement of compacted embankment along outside edge of cell and placement of waste over intermediate cover, and; (6) final cover placement of clay, native soil, topsoil, and vegetation over the full disposal cell.

The topsoil cover will be stripped and stockpiled along the southern edge of the vertical sideslope. This berm will create a barrier to restrict access along the top of the sideslopes. The material excavated from the trench will be stockpiled along the north edge of the vertical sideslope to create a barrier to restrict access along the north edge of the trench.

The working face of the trench (west end) and the equipment access (east end) will be constructed to a maximum slope of 3 horizontal to 1 vertical. Waste will be unloaded at the top of the working face and spread over the working face and compacted. The native clay is mixed with the solid waste throughout daily placement. The unloading of waste is restricted to one area of the working face to limit vehicular traffic and to limit the amount of waste exposed.

The material excavated from the trench is typically a silty clay material. In the area of the landfill trenches, the silty clay material is expected to be found at depths greater than 20 feet. The bottom of the trench will be lined with a minimum of 2 feet of compacted clay with a permeability no greater than 10^{-7} cm/sec. This clay material will be obtained from materials excavated onsite.

An intermediate cover will be placed over the solid waste once it has been placed to the level of the existing underground. The intermediate cover will consist of a minimum thickness of 18-inches of native soils stockpiled from the excavated trench. The intermediate cover will be compacted to facilitate trafficability over the waste in the cells. A 6-inch layer of gravel will be placed over the intermediate cover in the unloading area at the top of the working face to improve trafficability during inclement weather conditions. This gravel material is a temporary measure to improve access to the working face.

A compacted embankment will be constructed around the outside edges of the cell. This will allow for additional waste to be placed above the existing ground surface. After the compacted embankment is in place, the waste will be placed over the intermediate cover.

The final cover will consist of 18-inches of compacted clay within in-place permeability of no greater than 10^{-7} cm/sec. The compacted clay layer will be covered with 20 inches of material consisting of 14 inches of native soil and a 6 inch thick topsoil layer will be placed over the top. The topsoil will be available from the stripped and stockpiled topsoil material. The final cover will have a 3% cross slope and will be reseeded.

Equipment will be maintained and stored in a maintenance building and storage buildings centrally located on site. Access to the maintenance building will be provided for the landfill operation equipment. The landfill operating equipment will access the landfill trenches from the east end of the trench.

The specifications for construction of the Class I Landfill cells are included in Appendix J. The specifications include excavation, bottom liner, intermediate cover, final cover and revegetation. Plans for the landfill are included in Appendix K. The plans show the existing landfill facilities and the sites for the Class I and Class IV Landfill areas.

5.5 Leachate Collection

The annual average precipitation for the landfill is less than 10 inches per year and the post closure modeling of infiltration through the landfill indicates no percolation through the bottom liner of the landfill for at least the first twenty years of post closure. Landfill development is designed to minimize any precipitation contact with the placed waste, and all runoff within the open cell will be diverted away from the waste towards the bottom of the cell where it will be removed or allowed to evaporate.

5.5.1 Grading

Any water generated in the open cell will collect at the low-point of each cell. The trench bottom liner is designed as a low permeable clay liner with a 2 percent slope to direct all leachate away from the placed waste and towards the low point where it will evaporate or be removed for evaporation somewhere else on site.

5.5.2 Leachate Collection Pipe

Any moisture which does not evaporate could potentially infiltrate through the top clay cover and waste layer and be collected in the leachate collection pipe and removed through the collection pipe. Any leachate collected will be sampled on a semi-annual basis. The sample will be analyzed for the constituents for detection monitoring which are listed in State Solid Waste Rule R315-308-4.

The leachate collection pipe will be placed at the center of the waste trench at its lowest point. The pipe will be a perforated 6-inch diameter polyethylene pipe placed in a 24-inch deep geomembrane-lined trench and will run perpendicular to the length of the landfill trench. A 45-degree elbow will connect the 6-inch perforated pipe to an angled 10-inch diameter non-perforated pipe extending to the surface. This 10-inch pipe will

have a locking protective cover and will be used to monitor the level of any potential leachate collected in the 24-inch-deep leachate collection trench below the landfill. The 10-inch diameter pipe will accommodate an appropriately sized submersible pump in the event that evaluation of leachate is required.

5.6 Run-On and Run-Off Control Systems

Control of run-on from surrounding drainage basins and run-off from the landfill will be accomplished through drainage structures. The structures consist of earthen drainage ditches and corrugated metal pipes. Earth-lined drainage ditches have been constructed around the perimeter of the site to divert run-on. The culverts have been placed under roadways that access the site and equipment roadways within the landfill site. The drainage structures are designed to divert the run-on and run-off of a 25 year-24 hour precipitation event. The precipitation for the 25 year/24 hour storm event is 2.2 inches (NOAA Atlas, 1973). Run-off for the surrounding drainage basins was calculated by Bingham Engineering using the computer model STORM, which utilizes the Soil Conservation Service (SCS) method to calculate runoff. The 25 year storm event runoff from each drainage basin was used in the design of the drainage structures.

Drainage basin flowrates are very sensitive to the curve number (CN) used in the SCS calculations. Curve numbers are a measure of the extent that a soil retains or sheds water, and are determined from soil type and vegetation. Soil classifications used in calculating CN values for the Sage Flat area were obtained from the SCS office in Richfield, Utah. STORM only allows the input of one representative CN for each drainage basin, even though there may be several soil classifications within one drainage area. An area-weighted CN value was calculated for each drainage basin.

Seven drainage basins are identified which may potentially contribute run-on to the Sevier Landfill. Drainage basins are characterized by area, CN values, time of concentration and average slope of basin. Drainage basin A has the largest flow of 75 cubic feet per second (cfs), while the flow from Basin G is essentially zero. Characteristics and flowrates of the 7 drainage basins and STORM output are included in Appendix I.

Depth and velocity of flow were calculated using Manning's equation. The depth of water in the channels and the maximum velocity of the water was utilized to size the channels and to determine if the channels needed to be lined with riprap to prevent erosion. If velocities exceed 6 ft/sec in an earth-lined channel, riprap is necessary in the channel to prevent erosion.

The final cover for each of the Class I landfill cells will have a 3% cross slope towards the edge. Drainage swales will be constructed between each of the cells to direct the storm water runoff away from the cells. The cross slopes of the drainage swales will vary with a 3% minimum slope and 3:1 maximum slope. The longitudinal slopes of the drainage swales will vary from a minimum slope of 0.5% and maximum slope of 1%. The drainage swales will generally slope from the east to the west. The water will be collected in drainage channels on the West Side of the landfill and flow away from the site.

The storm water flow in the drainage swales for a 25-year storm event is calculated to be 1.9 cubic feet per second. The velocity of the storm water in the drainage swales will be less than 3 feet per second; therefore, riprap is not needed for the drainage swales. The storm water calculations for the drainage swales are also included in Appendix I.

5.7 Closure and Post-Closure Design and Maintenance

Closure and post-closure design, construction and maintenance will be performed to meet the requirements of the State Solid Waste Rules. The closure of the operations at Sage Flat Landfill will minimize the need for further maintenance; minimize the threats to human health and the environment from post closure escape of solid waste constituents, leachate, landfill gases, contaminated run-off or waste decomposition products to the groundwater, surface water or the atmosphere; and prepare the facility for the post closure period.

The landfill will be covered with a final design cover which will consist of an 18 inch compacted silty clay layer and a 20 inch soil cover over the compacted silty clay. The compacted silty clay layer will have a minimum field permeability of $1x10^{-7}$ cm/sec. The 20 inch soil cover will include 14 inches of native soil from the trench excavation or BLM source nearby, and 6 inches of topsoil from the trench excavation. The topsoil will be revegetated.

The waste disposal cell is expected to experience some settlement. The area is considered an arid site and will lessen the impacts attributed to settlement. However, the closure plan is designed to maintain a positive drainage off the trench area throughout the closure period. The majority of settlement will take place during and prior to final grading and cover replacement. The final grades will be constructed to a minimum 3 percent slope on the top of the trench cell. All runoff will be directed off and around the disposal cells. The entire site will be constructed with a perimeter drainage system which will minimize any runoff from the adjacent hillsides from contacting the waste cells.

All material necessary for post closure maintenance is expected to be available on site. Routine inspections and maintenance of slopes, drainage channels and covers will be performed periodically during the post closure period.

6.0 CLOSURE AND POST-CLOSURE PLANS

6.1 General

Final closure activities will be implemented at the completion of each trench cell. Final cover, grading and revegetation of the trenches will occur as each cell is completed to minimize infiltration into the waste cell. Closure of the site is designed to be performed in such a manner as to minimize the need for post-closure maintenance and minimize the potential effects of the landfill on the surrounding environment. Post-closure operations will consist of vadose zone monitoring of the landfill and periodic site inspections to determine that the site is performing as designed.

6.1.1 Final Cover and Grading

The final cover of the proposed Sevier County Landfill will consist of 18 inches of compacted clay covered with 20 inches of material consisting of 14 inches of native soil and 6 inches of topsoil. The final cover will be placed after the waste has been placed and compacted to the grade outlined in the plans. The cover will be constructed with a 3% slope to the sides of the trench. The compacted clay cover will have a maximum hydraulic conductivity of $1x10^{-7}$ cm/sec. The native soil and topsoil will be obtained from the site, and will consist of soil that has been excavated from the top of the cell and stockpiled at the sides of the trench for placement as final cover.

6.1.2 Volume Capacity

The total volume capacity of the proposed Class I landfill area is approximately 2,825,000 cubic yards (yd^3). The current disposal rate is about 85 tons per day of waste. The average placed waste density is estimated to be 1,000 pounds per cubic yard. The life of the landfill is expected to exceed the estimated landfill requirements of the County's 20 year Solid Waste Management Plan. Each of the larger trenched cells will provide over 5 years of landfill capacity.

6.1.3 Closure Schedule

Each trenched cell will be closed separately upon completion of filling the cell. The cell will have the clay cover, native soil and topsoil placed, as shown in the plans, after the cell has been filled. Trenches will be excavated and closed starting from the north end of the site and working to the south.

6.1.4 Final Inspection

A final inspection will be performed at the termination of the landfill activities at the Sage Flat facility. The final inspection will determine if the landfill meets all the closure requirements as outlined in the permit and closure plans. Inspection requirements of the closure plan will include; long-term operation of run-on and run-off controls, maintenance of proper final grade on the cells to promote run-off, control of access at the site (fencing), and the installation and operation of vadose zone moisture monitoring facilities to monitor potential landfill leachate generation.

6.2 Monitoring

In addition to the periodic inspections, post closure monitoring of the landfill will include monitoring of the leachate of the Class I landfill cells. Leachate monitoring will be accomplished through the use of leachate collection pipes that will be installed at the low point of each cell. Monitoring of groundwater in any onsite wells is not proposed due to the relatively slow flow rates through the landfill profile. Groundwater modeling was performed utilizing the HELP (Hydraulic Evaluation of Landfill Performance) model. A summary of the HELP results are provided in Section 4.7 and Appendix G.

6.2.1 Monitoring Schedule

Monitoring of leachate generation will be on a semi-annual basis through both the active period of the landfill operations and the post-closure period. Monitoring will consist of removal of any leachate from the collection system, determination of the amount of leachate being produced form the landfill and the chemistry of the leachate.

6.3 Maintenance

Post-closure maintenance will consist of vadose zone monitoring and site inspections for assurance of site integrity. Post closure activities will be performed for at least 30 years after closure of the facility.

7.0 FINANCIAL ASSURANCE PLAN

Sevier County has established a trust fund with the Utah Independent Bank of Salina. The trust fund was started in 1994 and the original annual payment was estimated to be $11,756.00. There have been some modifications to the cell configurations since that time. The updated amount of the trust fund is based on no requirement for post-closure groundwater monitoring, and the total area for final closure is approximately 9.64 acres for placement of final cover on the largest cell. The trust fund will be used to pay the costs of closure and post-closure activities. Following is the updated financial assurance calculation.

Table 7.1
SUMMARY OF ESTIMATED CLOSURE & POST-CLOSURE COSTS

TASK	QUANTITY	UNTIS	UNIT COST	TASK COST
Obtain Clay[1]	23,335	CY	$0.00	$0
Move & Place Clay	23,335	CY	$2.00	$46,670
Obtain Native Soil[1]	18,150	CY	$0.00	$0
Move & Place Native Soil	18,150	CY	$2.00	$36,300
Obtain Topsoil[1]	7,780	CY	$0.00	$0
Move & Place Topsoil	7,780	CY	$1.25	$9,725
Final Grading	9.64	ACRES	$1,500	$14,460
Seeding	9.64	ACRES	$800	$7,712
Post-Closure Gas Monitoring	60	JOB	$150	$9,000
Post-Closure Leachate Monitoring	60	JOB	$150	$9,000
Post-Closure Annual Maintenance	30	JOB	$1,000	$30,000
			TOTAL	$162,867
			ANNUAL PAYMENT	$32,573

[1] Available on-site from stockpiled materials from trench excavation.

8.0 CLASS IV LANDFILL

8.1 Class IV Landfill Location

A Class IV Landfill is also located at the Sage Flat Landfill site. The location of the Class IV site is along the eastern hillside in the southern section of the Sage Flat Landfill boundary. Access to the site is by a gravel road located along the toe of the adjacent hillside. An equipment road is located adjacent to and up the slope from the access road. Cover material will be stockpiled from the excavated material available from the initial development of the Class IV site. Expansion of the Class IV will continue in the immediate area.

8.2 Class IV Landfill Closure

The closure design and post closure maintenance for the Class IV site will include the final grading to the general slopes of the adjacent hillside. The site will then be covered with a minimum 2 feet of cover which includes a minimum 6 inches of topsoil. The area will then be seeded with grass, other shallow rooted vegetation, or other native vegetation.

9.0 REFERENCES

Algermissen, S.T., Perkins, D.M., Thenhaus, P.C., Hanson, S.L., and Bender, B.L., 1990, *Probabilistic Earthquake Acceleration and Velocity Maps for the United States and Puerto Rico*: U.S. Geological Survey Map MF-2120, 1:7,500,000.

Stauffer, N.E., 1985, STORM

U.S. Department of Commerce, 1983, *The Hydrologic Evaluation of Landfill Performance (HELP) Model*, Volume 1 Pb85-100840 and Volume 2, Pb95-100832.

Utah Climate Center, 1993, *Climatological Data, Milford, Richfield, Sigurd Reporting Stations*, Utah State University.

Utah Department of Environmental Quality, 2003, *Solid Waste Permitting and Management Rules*, Utah Administrative Code (R315-301 through 320).

A. Young, R.A., Carpenter, C.H., 1965, *Groundwater Conditions and Storage in the Central Sevier Valley, Utah*, U.S. Geological Survey Water – Supply Paper 1787.

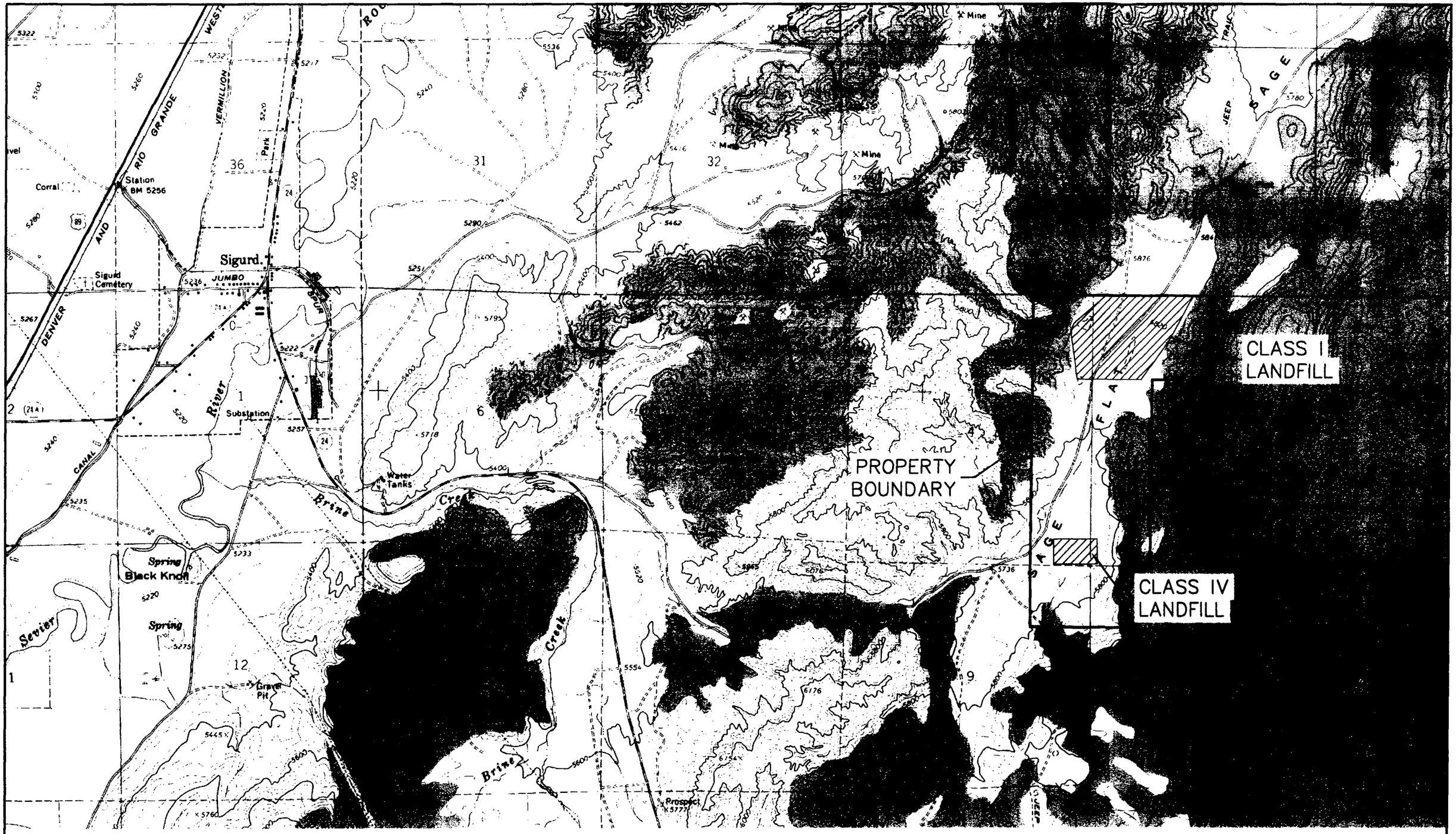

NOTE:
ALL AREAS ADJACENT TO THE SAGE FLAT LANDFILL BOUNDARY ARE LAND USE DESIGNATION: GRF–1 (GRAZING, RECREATION AND FORESTRY)

REFERENCE:
USGS SIGURD QUADRANGLE, UTAH – SEVIER CO.
7.5 MINUTE SERIES (TOPOGRAPHIC) 1966

2000 0 2000 4000

Jones & DeMille Engineering
1535 South 100 West – Richfield, Utah 84701
Phone (435) 896–8266
Fax (435) 896–8268
www.jonesanddemille.com

Sevier County Sage Flat Landfill
Vicinity Map

ENGINEER T.M.J.	DRAWN T.R.B.	SHEET NO. FIG. 1
CHECKED J.F.S.	PROJ#: 0406–137 DWG.NM: FIGURE 1	
SCALE 1"=2000'	DATE 06/30/2004	

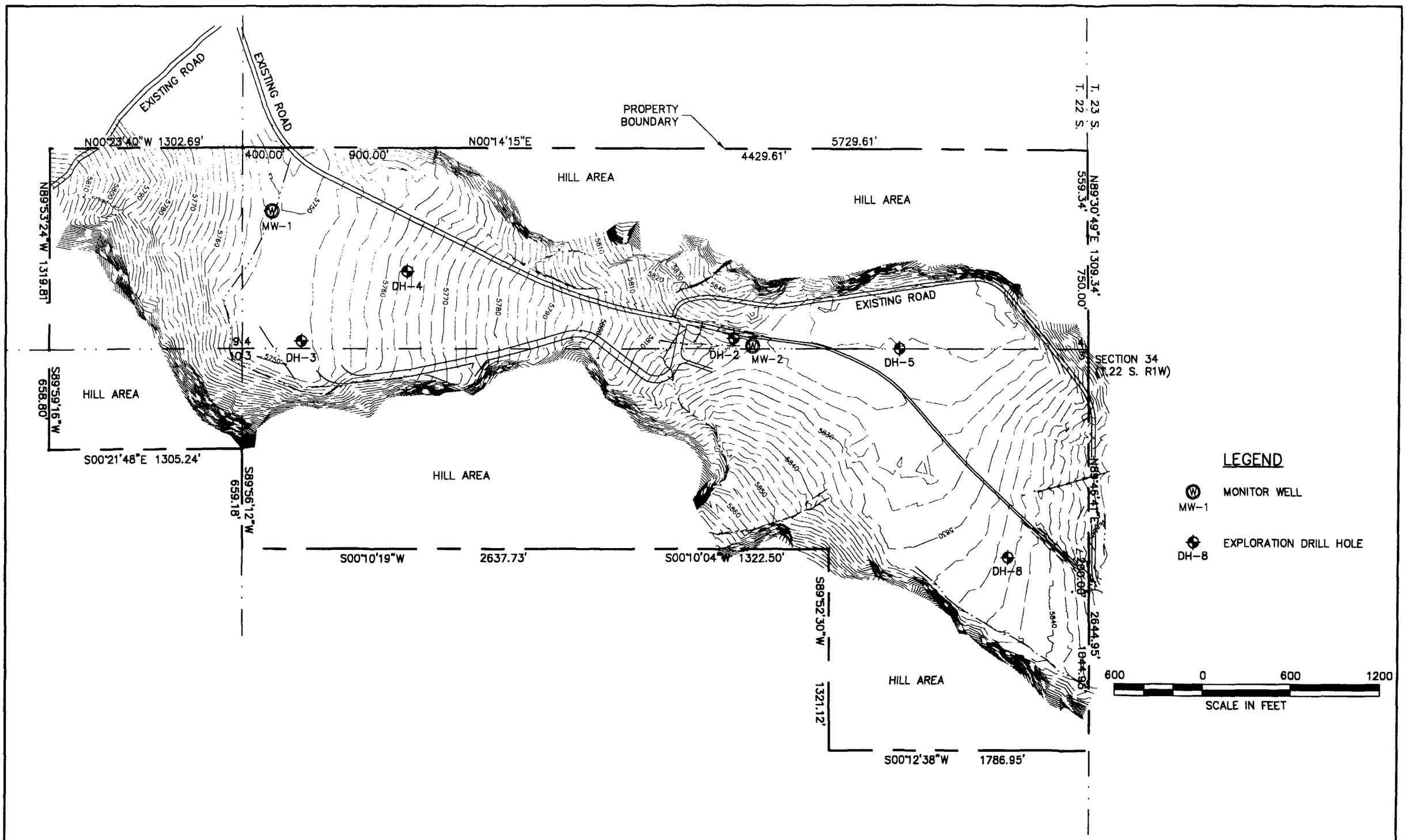

Jones & DeMille Engineering
1535 South 100 West – Richfield, Utah 84701
Phone (435) 896-8266
Fax (435) 896-8268
www.jonesanddemille.com

Sevier County Sage Flat Landfill
Topographic, Monitor Well & Exploratory Drill Hole Map

ENGINEER T.M.J.	DRAWN T.R.B.	SHEET NO. FIG. 2
CHECKED J.F.S.	PROJ#: D406-137 DWG.NM: FIGURE 2	
SCALE 1"=600'	DATE 06/30/2004	

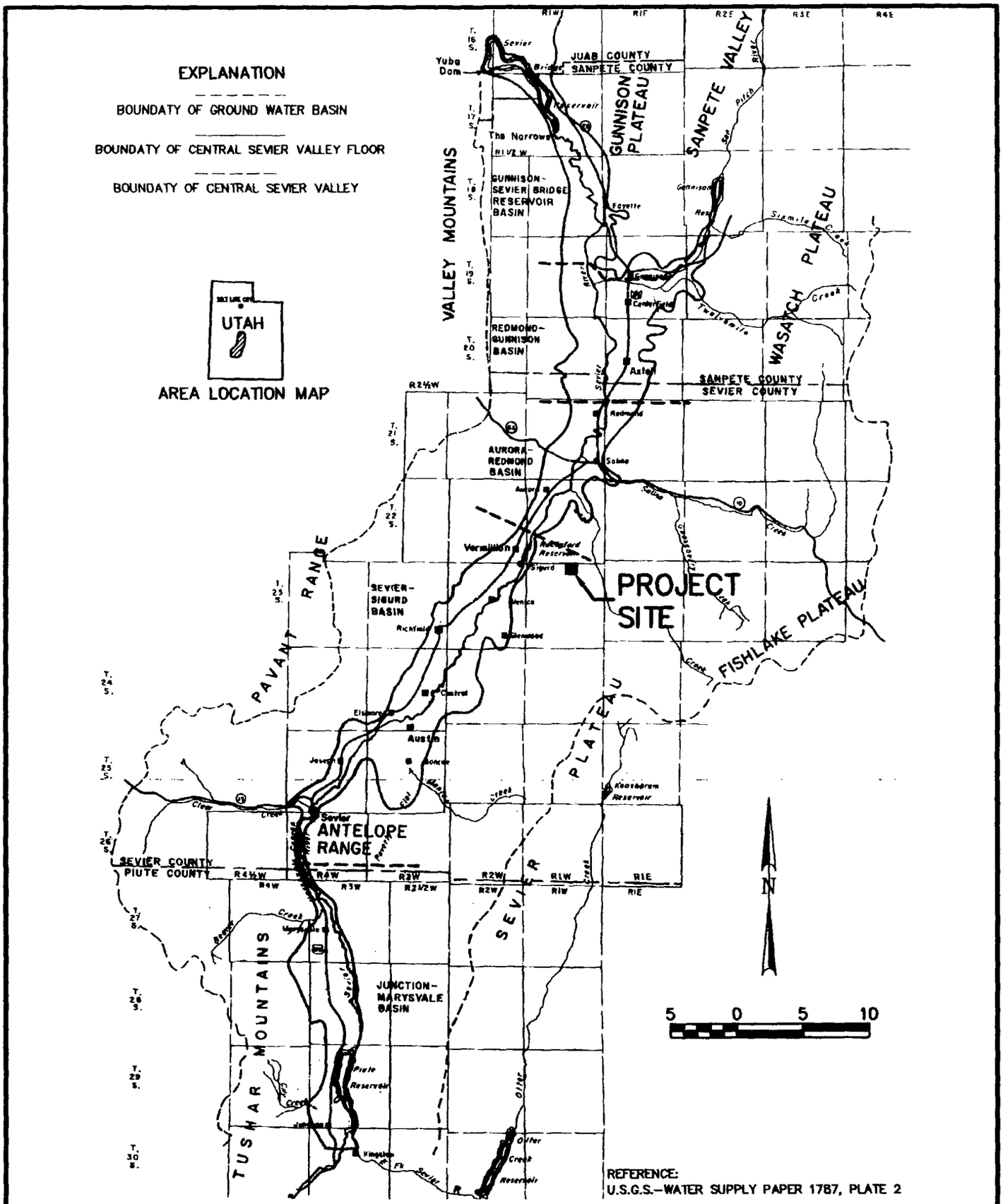

REFERENCE:
U.S.G.S.–WATER SUPPLY PAPER 1787, PLATE 2

Jones & DeMille Engineering
1535 South 100 West – Richfield, Utah 84701
(435) 896-8266 Phone
(435) 896-8268 Fax
www.jonesanddemille.com

Sevier County Sage Flat Landfill

Figure 3

Physiographic Setting

SCALE: 1" = 10 MI.	ENG.: T.M.J.	PROJ.#: 0406-137
DATE: 06/29/2004	DWG.BY: T.R.B.	DWG.NAME: FIGURE 3

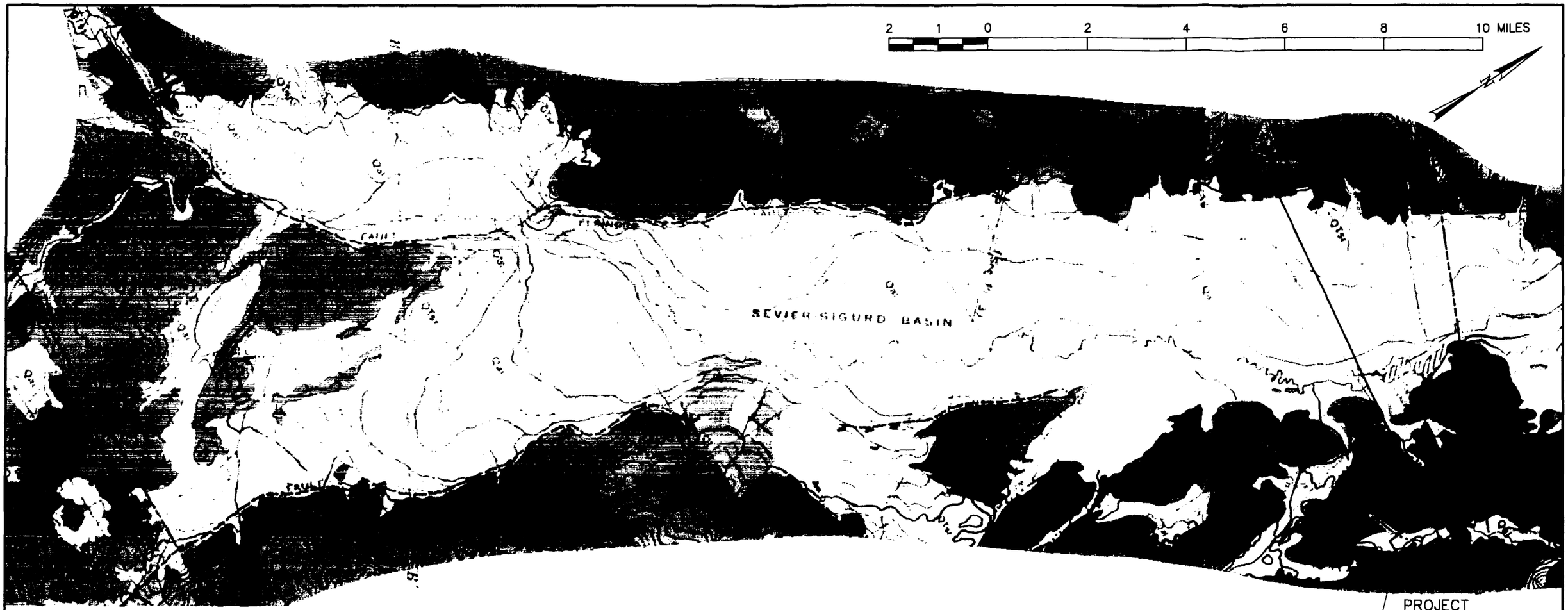

EXPLANATION

Qal

ALLUVIUM

ALLUVIUM AND ALLUVIAL FANS COMPOSED OF POORLY TO WELL-SORTED CLAY, SILT, SAND, GRAVEL, AND BOULDERS; 0-800+ FT. THICK. IN THE CENTRAL SEVIER VALLEY FLOOR CONTAINS THICK SAND AND GRAVEL DEPOSITS WHICH YIELD LARGE AMOUNTS OF WATER

Qls

LANDSLIDE DEPOSITS

UNSORTED SLIDE MATERIAL; NOT A SOURCE OF GROUND WATER

Qtg

TERRACE GRAVEL

DEPOSITS OF POORLY SORTED SAND AND GRAVEL ALONG PRESENT AND FORMER STREAM CHANNELS; 0-50 FT. THICK. GENERALLY WELL DRAINED, BUT SOME OF THE LARGER BODIES YIELD WATER TO SPRINGS AND SHALLOW DUG WELLS

QTsr

SEVIER RIVER FORMATION

FANGLOMERATE DEPOSITS CONSISTING OF SILT, SAND, GRAVEL, COBBLES, AND BOULDERS DERIVED FROM ADJACENT HIGHLANDS BY TORRENTIAL RUNOFF; VERY POORLY SORTED; 0-800 FT THICK. INCLUDES AXTELL FORMATION OF SPIEKER (1949, P. 38). YIELDS SMALL AMOUNTS OF WATER TO WELLS IN MOST AREAS

INTRUSIVE ROCKS

QUARTZ DIORITE, QUARTZ MONZONITE, AND MONZONITE INTRUSIVE INTO BULLION CANYON VOLCANICS. MUCH OF THE MINERALIZATION IS ASSOCIATED WITH THE QUARTZ MONZONITE. DOES NOT YIELD GROUND WATER IN AREA

ARAPIEN SHALE

RED AND GRAY SHALE AND RED AND GRAY FINE-GAINED SANDSTONE CONTAINING SALT AND GYPSUM; REACHES A MAXIMUM THICKNESS OF ABOUT 10,000 FT. SLIGHTLY PERMEABLE. CONTRIBUTES CHLORIDE AND SULFATE TO PERCOLATING WATER

VOLCANIC ROCKS

INCLUDES JOE LOTT TUFF, MOUNT BELNAP RHYOLITE, DRY HOLLOW FORMATION, ROGER PARK BASALTIC BRECCIA, AND BULLION CANYON VOLCANICS; 7,000-13,000 FT. THICK. MOST ARE SLIGHTLY PERMEABLE. THE DRY HOLLOW FORMATION, WHICH CONTAINS JOINTS AND ELONGATE VESICLES, SERVES AS A GROUND-WATER RESERVOIR THAT IS A SOURCE OF WATER FOR MANY SPRINGS

DIPPING VAT FORMATION OF MCGOOKEY (1960)

EVENLY BEDDED TUFFACEOUS SANDSTONE CONTAINING GLASS SHARDS AND ROCK FRAGMENTS WITH SPARSE LENSES OF CLAY AND SILTY LIMESTONE; ABOUT 200 FT. THICK. IT IS EXTREMELY PERMEABLE IN SOME PARTS OF THE AREA, BUT NO WELLS ARE KNOWN TO PENETRATE THE FORMATION

BALD KNOLL FORMATION OF GILLILAND (1951)

PASTEL-COLORED CLAY, SILTSTONE, SANDSTONE, LIMESTONE, AND PYROCLASTICS; 800-1,000 FT. THICK. VERY POORLY CONSOLIDATED. ERODED BY SHEETWASH TO FORM BADLAND TOPOGRAPHY. A 920 FT. SECTION PENETRATED BY WELL (C-21-1) 18DAA-1 YIELDED NO WATER

CRAZY HOLLOW FORMATION OF SPIEKER (1949)

RED AND ORANGE SANDSTONE, SILTSTONE, AND SHALE, LIGHT-GRAY SANDSTONE, AND SALT-AND-PEPPER SANDSTONE OF FLURIAL ORIGIN; 300-1,000 FT. THICK. TOO DEEP BENEATH THE FLOOR OF THE VALLEY FOR DEVELOPMENT. RICHFIELD SPRING. (C-23-3) 28ACA, ISSUES FROM THIS FORMATION

GREEN RIVER FORMATION

MASSIVE TO THIN-BEDDED WHITE TO YELLOWISH-GRAY LIMESTONE AND GREEN TO GRAYISH-GREEN SHALE OF LACUSTRINE ORIGIN; 400-1,200 FT. THICK. MAY YIELD WATER WHERE JOINTS OR SOLUTION CAVITIES ARE DEVELOPED IN THE LIMESTONE MEMBER

FLAGSTAFF LIMESTONE

WHITE TO RED MASSIVE TO THIN-BEDDED LIMESTONE, SILTSTONE, AND SANDSTONE OF LACUSTRINE AND FLUVIAL ORIGIN; 100-1,500 FT. THICK. NO WELLS ARE KNOWN TO PENETRATE THIS FORMATION, BUT IT YIELDS ABOUT 1,900 GPM TO FAYETTE SPRING. (D-18-1) 19DAB, FROM A SOLUTION CAVITY

REFERENCE:
USGS - WATER SUPPLY PAPER 1787, PLATE 1

Jones & DeMille Engineering
1535 South 100 West - Richfield, Utah 84701
Phone (435) 896-8266
Fax (435) 896-8268
www.jonesanddemille.com

Sevier County Sage Flat Landfilll
Regional Geologic Map

ENGINEER T.M.J.	DRAWN T.R.B
CHECKED J.F.S.	PROJ#: 0406-137 DWG.NM: FIGURE 4
SCALE 1"=2 MI.	DATE 06/29/04

SHEET NO. FIG. 4

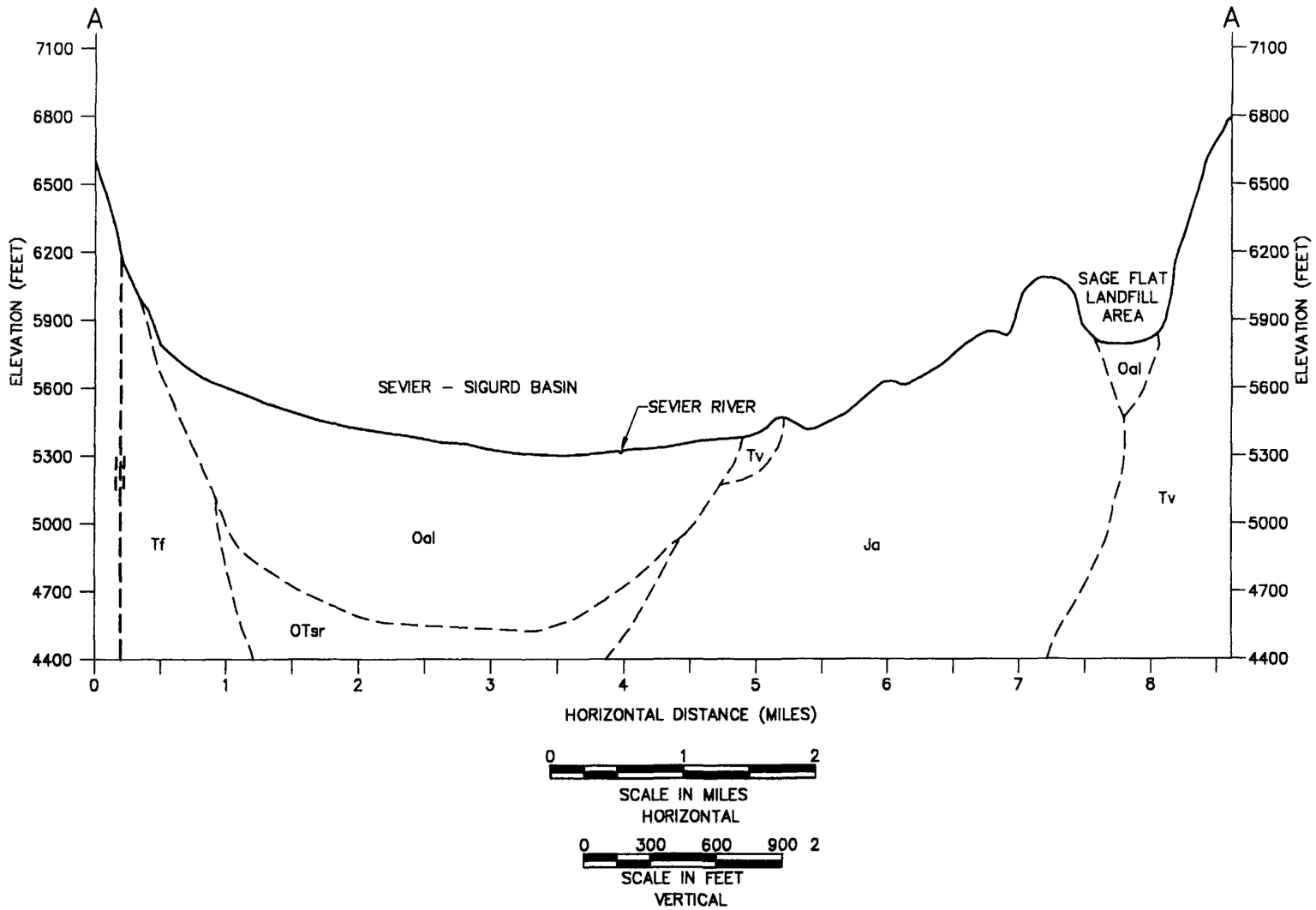

0 1 2

SCALE IN MILES
HORIZONTAL

0 300 600 900 2

SCALE IN FEET
VERTICAL

LEGEND

Oal	ALLUVIUM
OTsr	SEVIER RIVER FORMATION
Tv	VOLCANIC ROCKS
Tf	FLAGSTAFF LIMESTONE
Ja	ARAPIEN SHALE
– – – –	CONTACT
– – – –	FAULT

REFERENCE: BINGHAM ENVIRONMENTAL

Jones & DeMille Engineering
1535 South 100 West – Richfield, Utah 84701
Phone (435) 896-8266
Fax (435) 896-8268
www.jonesanddemille.com

Sevier County Sage Flat Landfill
Generalized Geologic Section

ENGINEER T.M.J.	DRAWN T.R.B.	SHEET NO.	
CHECKED J.F.S.	PROJ#: 0406-137 DWG.NM: FIGURE 5		FIG. 5
SCALE 0=0	DATE 06/29/2004		

Appendix A

Form 1860-9
(January 1988)

The United States of America

To all to whom these presents shall come, Greeting:

Serial No. Utah 68984

259132

WHEREAS,

Sevier County, Utah

is entitled to a land patent pursuant to the Recreation and Public Purposes Act of June 14, 1926 (44 Stat. 741), as amended and supplemented (43 U.S.C. 869; et. seq.), for the following described land:

Salt Lake Meridian, Utah

T. 23 S., R. 1 W.,

4-177A - (L-107) sec. 3, lots 3 thru 6, inclusive, lot 12, W½SW¼; 227.95 Ac
4-178-2 - (L-94) sec. 4, lots 1, 9, 10, E½SE¼; — 173.97 Ac.
4-178B - (L-94) sec. 9, NE¼NE¼; 40 AC.
4-178A - (L-108) sec. 10, W½NW¼NW¼. 20 AC.

containing 461.94 acres

NOW KNOW YE, that the UNITED STATES OF AMERICA, in consideration of the premises, and in conformity with said Act of Congress, HAS GIVEN AND GRANTED, and by these presents DOES GIVE AND GRANT unto the said Sevier County, Utah, the land above described, for use as a regional sanitary landfill: TO HAVE AND TO HOLD the same, together with all rights, privileges, immunities, and appurtenances, of whatsoever nature, thereunto belonging, unto the same Sevier County, Utah, forever; and

EXCEPTING AND RESERVING TO THE UNITED STATES:

1. A right-of-way thereon for ditches or canals constructed by the authority of the United States. Act of August 30, 1890 (43 U.S.C. 945); and

2. All mineral deposits in the lands so patented, and the right of the United States, or persons authorized by the United States, to prospect for, mine, and remove such deposits from the same under applicable laws and regulations as the Secretary of the Interior may prescribe; and

Sevier County, Utah, its successors or assigns, assumes all liability for and shall defend, indemnify, and save harmless the United States and its officers, agents, representatives, and employees, from all claims, loss, damage, actions, causes of action, expense, and liability (hereinafter referred to in this clause as claims) resulting from, brought for, or on account of, any personal injury, threat of personal injury, or property damage received or sustained by any person or persons (including the patentee's employees) or property growing out of, occurring, or attributable directly or indirectly, to the disposal of solid waste on, or the release of hazardous substances from the land described above, regardless

Form 1860-10
(April 1988)

Serial No. Utah 68984

of whether such claims shall be attributable to: (1) the concurrent, contributory, or partial fault, failure, or negligence of the United States, or (2) the sole fault, failure, or negligence of the United States.

If, at any time, the patentee transfers to another party ownership of any portion of the land not used for the purposes specified in the application and approved plan of development, the patentee shall pay the Bureau of Land Management the fair market value, as determined by the authorized officer, of the transferred portion as of the date of transfer, including the value of any improvements thereon.

The above described land has been conveyed for utilization as a regional sanitary landfill. Upon closure, the sites may contain small quantities of commercial and household hazardous waste as determined in the Resource Conservation and Recovery Act of 1976, as amended (42 U.S.C. 6901), and defined in 40 CFR 261.4 and 261.5. Although there is no indication these materials pose any significant risk to human health or the environment, future land uses should be limited to those which do not penetrate the liner or final cover of the landfill unless excavation is conducted subject to applicable State and Federal requirements.

Entry No. 259132 Book 286
Recorded APR 11 1994 At 2:20 Page 278
Dorthy V. Henrie, Recorder Sevier County
Request of Gene Mendenhall Fee No Fee
County Commissioner

IN TESTIMONY WHEREOF, the undersigned authorized officer of the Bureau of Land Management, in accordance with the provisions of the Act of June 17, 1948 (62 Stat. 476), has, in the name of the United States, caused these letters to be made Patent, and the Seal of the Bureau to be hereunto affixed.

GIVEN under my hand, in Salt Lake City, Utah
the fifth day of April
in the year of our Lord one thousand nine hundred and
ninety-four and of the Independence of the
United States the two hundred and eighteenth

By [signature]
Chief, Branch of Lands and Minerals, Operations

Patent Number 43-94-0017

Appendix B

Groundwater Analysis of Monitoring Wells

INORGANIC ANALYSIS REPORT

AMERICAN
WEST
ANALYTICAL
LABORATORIES

463 West 3600 South
Salt Lake City, Utah
84115

(801) 263-8686
Fax (801) 263-8687

Client: Bingham Environmental
Date Received: February 25, 1993
Lab Sample ID Number: 13287-01
Field Sample ID: Job #1687/Sevier County Landfill/MW-1

Contact: Mark Taggert
Received By: Jennifer Habel

Analytical Results

	Method Used:	Detection Limit: mg/L	Amount Detected: mg/L
TOTAL METALS			
Antimony	6010	0.1	<0.1
Arsenic	7060	0.005	**0.026**
Barium	6010	0.002	**3.8**
Beryllium	6010	0.005	**0.01**
Calcium	6010	0.05	**890.**
Cadmium	6010	0.004	**0.041**
Chromium	6010	0.01	**0.14**
Cobalt	6010	0.01	**0.08**
Copper	6010	0.004	**0.21**
Iron	6010	0.01	**130.**
Lead	7421	0.005	**0.097**
Magnesium	6010	0.05	**140.**
Manganese	6010	0.005	**3.2**
Mercury	7471	0.001	<0.001
Nickel	6010	0.005	**0.02**
Potassium	6010	0.1	**57.**
Selenium	7740	0.005	<0.005
Silver	6010	0.01	**0.04**
Sodium	6010	0.1	**86.**
Thallium	6010	0.5	<0.5
Vanadium	6010	0.005	**0.23**
Zinc	6010	0.005	**1.5**
OTHER CHEMISTRIES			
Ammonia (as N)	350.1	0.05	<0.05
Bicarbonate (as $CaCO_3$)	310.1	10.	**305.**
Carbonate (as $CaCO_3$)	310.1	10.	<10.
Chloride	9056	0.5	**190.**
COD	Hach 8000	5.0	**10.**
Conductivity	120.1	10.	**990.** µmhos/cm @ 25° C
Nitrate (as N)	9056	0.01	**0.05**
pH	150.1	0.1	**8.3**
Sulfate	9056	5.0	**31.**
TDS	160.1	1.0	**590.**
TOC	415.1	1.0	**8.0**

Released by: _____
Laboratory Supervisor

Report Date 3/15/93

THIS REPORT IS PROVIDED FOR THE EXCLUSIVE USE OF THE ADDRESSEE. PRIVILEGES OF SUBSEQUENT USE OF THE NAME OF THIS COMPANY OR ANY MEMBER OF ITS STAFF, OR REPRODUCTION OF THIS REPORT IN CONNECTION WITH THE ADVERTISEMENT, PROMOTION OR SALE OF ANY PRODUCT OR PROCESS OR IN CONNECTION WITH THE RE-PUBLICATION OF THIS REPORT FOR ANY PURPOSE OTHER THAN FOR THE ADDRESSEE

ORGANIC ANALYSIS REPORT

AMERICAN WEST ANALYTICAL LABORATORIES

463 West 3600 South
Salt Lake City, Utah
84115

(801) 263-8686
Fax (801) 263-8687

Client: Bingham Environmental
Date Received: February 25, 1993
Set Identification Number: 13287
Set Description: Two Water Samples

Contact: Mark Taggert
Received By: Jennifer Habel

Analysis Requested:	Method Ref. Number:	Date Analyzed:
Volatile Organics	EPA # 624 (SW-846 #8260) Purge & Trap GC/MS	February 25, 1993

Lab Sample ID. Number: 13287-01

Field Sample ID. Number: Job #1687/Sevier County Landfill/MW-1

Analytical Results — VOLATILE ORGANIC COMPOUNDS

Units = µg/L (ppb)

Compound:	Detection Limit:	Amount Detected:
Acetone	10.	< 10.
Acrylonitrile	10.	< 10.
Benzene	2.0	< 2.0
Bromochloromethane	2.0	< 2.0
Bromodichloromethane	2.0	< 2.0
Bromoform	2.0	< 2.0
Bromomethane	5.0	< 5.0
2-Butanone	10.	<10.
Carbon disulfide	2.0	< 2.0
Carbon tetrachloride	2.0	< 2.0
Chlorobenzene	2.0	< 2.0
Chloroethane	5.0	< 5.0
Chloroform	2.0	< 2.0
Chloromethane	5.0	< 5.0
Dibromochloromethane	2.0	< 2.0
1,2-Dibromo-3-chloropropane	2.0	< 2.0
1,2-Dibromoethane	2.0	< 2.0
Dibromomethane	2.0	< 2.0
1,2-Dichlorobenzene	2.0	< 2.0
1,4-Dichlorobenzene	2.0	< 2.0
1,1-Dichloroethane	2.0	< 2.0
1,2-Dichloroethane	2.0	< 2.0
1,1-Dichloroethene	2.0	< 2.0
cis-1,2-Dichloroethene	2.0	< 2.0
trans-1,2-Dichloroethene	2.0	< 2.0
1,2-Dichloropropane	2.0	< 2.0
cis-1,3-Dichloropropene	2.0	< 2.0
trans-1,3-Dichloropropene	2.0	< 2.0

THIS REPORT IS PROVIDED FOR THE EXCLUSIVE USE OF THE ADDRESSEE. PRIVILEGES OF SUBSEQUENT USE OF THE NAME OF THIS COMPANY OR ANY MEMBER OF ITS STAFF, OR REPRODUCTION OF THIS REPORT IN CONNECTION WITH THE ADVERTISEMENT, PROMOTION OR SALE OF ANY PRODUCT OR PROCESS OR IN CONNECTION WITH THE RE-PUBLICATION OF THIS REPORT FOR ANY PURPOSE OTHER THAN FOR THE ADDRESSEE WILL BE GRANTED ONLY ON CONTACT.

AMERICAN
WEST
ANALYTICAL
LABORATORIES

63 West 3600 South
Salt Lake City, Utah
84115

(801) 263-8686
Fax (801) 263-8687

Lab Sample ID. Number:
13287-01

Field Sample ID. Number:
Job #1687/Sevier County Landfill/MW-1

Analytical Results — VOLATILE ORGANIC COMPOUNDS

Units = µg/L (ppb)

Compound:	Detection Limit:	Amount Detected:
Ethylbenzene	2.0	< 2.0
2-Hexanone	5.0	< 5.0
Methylene chloride	2.0	< 2.0
4-Methyl-2-pentanone	5.0	< 5.0
Styrene	2.0	< 2.0
1,1,1,2-Tetrachloroethane	2.0	< 2.0
1,1,2,2-Tetrachloroethane	2.0	< 2.0
Tetrachloroethene	2.0	< 2.0
Toluene	2.0	< 2.0
1,1,1-Trichloroethane	2.0	< 2.0
1,1,2-Trichloroethane	2.0	< 2.0
Trichloroethene	2.0	< 2.0
Trichlorofluoromethane	2.0	< 2.0
1,2,3-Trichloropropane	2.0	< 2.0
Vinyl acetate	5.0	< 5.0
Vinyl chloride	5.0	< 5.0
ortho-Xylene	2.0	< 2.0
meta and para-Xylene	2.0	< 2.0
Iodomethane	10.	<10.
trans 1,4-Dichloro-2-Butene	10.	<20.

Analytical Results — TENTATIVELY IDENTIFIED COMPOUNDS

Units = µg/L (ppb)

Compound:	Detection Limit:	Amount Detected:
None Detected	20.	

< Value = None detected above the specified method detection limit, or a value that reflects a reasonable limit due to interferences.

T = Trace. Detectable amount is lower than the practical quantitation limit for this compound.

Released by: _____
Laboratory Supervisor

Report Date 3/15/93

THIS REPORT IS PROVIDED FOR THE EXCLUSIVE USE OF THE ADDRESSEE. PRIVILEGES OF SUBSEQUENT USE OF THE NAME OF THIS COMPANY OR ANY MEMBER OF ITS STAFF, OR REPRODUCTION OF THIS REPORT IN CONNECTION WITH THE ADVERTISEMENT, PROMOTION OR SALE OF ANY PRODUCT OR PROCESS OR IN CONNECTION WITH THE RE-PUBLICATION

AMERICAN
WEST
ANALYTICAL
LABORATORIES

463 West 3600 South
Salt Lake City, Utah
84115

(801) 263-8686
Fax (801) 263-8687

INORGANIC ANALYSIS REPORT

Client: Bingham Environmental
Date Received: August 25, 1993
Lab Sample ID. Number: 15504-01
Field Sample ID.: Proposed Sevier County Landfill/MW-2

Contact: Mark Taggart
Received By: Jennifer Habel

Analytical Results

	Method Used:	Detection Limit: mg/L	Amount Detected: mg/L
TDS	160.1	1.0	**1,100.**

Released by: _____
Laboratory Supervisor

Report Date 8/26/93

THIS REPORT IS PROVIDED FOR THE EXCLUSIVE USE OF THE ADDRESSEE. PRIVILEGES OF SUBSEQUENT USE OF THE NAME OF THIS COMPANY OR ANY MEMBER OF ITS STAFF, OR REPRODUCTION OF THIS REPORT IN CONNECTION WITH THE ADVERTISEMENT, PROMOTION OR SALE OF ANY PRODUCT OR PROCESS OR IN CONNECTION WITH THE RE-PUBLICATION OF THIS REPORT FOR [illegible]

ORGANIC ANALYSIS REPORT

AMERICAN WEST ANALYTICAL LABORATORIES

63 West 3600 South
Salt Lake City, Utah
84115

(801) 263-8686
Fax (801) 263-8687

Client: Bingham Environmental
Date Received: February 25, 1993
Set Identification Number: 13287
Set Description: Two Water Samples

Contact: Mark Taggert
Received By: Jennifer Habel

Analysis Requested:	Method Ref. Number:	Date Analyzed:
Volatile Organics	EPA # 624 (SW-846 #8260) Purge & Trap GC/MS	February 25, 1993

Lab Sample ID. Number: 13287-02

Field Sample ID. Number: Job #1687/Sevier County Landfill/Trip Blank

Analytical Results — VOLATILE ORGANIC COMPOUNDS

Units = µg/L (ppb)

Compound:	Detection Limit:	Amount Detected:
Acetone	10.	< 10.
Acrylonitrile	10.	< 10.
Benzene	2.0	< 2.0
Bromochloromethane	2.0	< 2.0
Bromodichloromethane	2.0	< 2.0
Bromoform	2.0	< 2.0
Bromomethane	5.0	< 5.0
2-Butanone	10.	<10.
Carbon disulfide	2.0	< 2.0
Carbon tetrachloride	2.0	< 2.0
Chlorobenzene	2.0	< 2.0
Chloroethane	5.0	< 5.0
Chloroform	2.0	< 2.0
Chloromethane	5.0	< 5.0
Dibromochloromethane	2.0	< 2.0
1,2-Dibromo-3-chloropropane	2.0	< 2.0
1,2-Dibromoethane	2.0	< 2.0
Dibromomethane	2.0	< 2.0
1,2-Dichlorobenzene	2.0	< 2.0
1,4-Dichlorobenzene	2.0	< 2.0
1,1-Dichloroethane	2.0	< 2.0
1,2-Dichloroethane	2.0	< 2.0
1,1-Dichloroethene	2.0	< 2.0
cis-1,2-Dichloroethene	2.0	< 2.0
trans-1,2-Dichloroethene	2.0	< 2.0
1,2-Dichloropropane	2.0	< 2.0
cis-1,3-Dichloropropene	2.0	< 2.0
trans-1,3-Dichloropropene	2.0	< 2.0

THIS REPORT IS PROVIDED FOR THE EXCLUSIVE USE OF THE ADDRESSEE. PRIVILEGES OF SUBSEQUENT USE OF THE NAME OF THIS COMPANY OR ANY MEMBER OF ITS STAFF, OR REPRODUCTION OF THIS REPORT IN CONNECTION WITH THE ADVERTISEMENT, PROMOTION OR SALE OF ANY PRODUCT OR

AMERICAN
WEST
ANALYTICAL
LABORATORIES

463 West 3600 South
Salt Lake City, Utah
84115

(801) 263-8686
Fax (801) 263-8687

Lab Sample ID. Number:
13287-02

Field Sample ID. Number:
Job #1687/Sevier County Landfill/Trip Blank

Analytical Results — VOLATILE ORGANIC COMPOUNDS

Units = µg/L (ppb)

Compound:	Detection Limit:	Amount Detected:
Ethylbenzene	2.0	< 2.0
2-Hexanone	5.0	< 5.0
Methylene chloride	2.0	< 2.0
4-Methyl-2-pentanone	5.0	< 5.0
Styrene	2.0	< 2.0
1,1,1,2-Tetrachloroethane	2.0	< 2.0
1,1,2,2-Tetrachloroethane	2.0	< 2.0
Tetrachloroethene	2.0	< 2.0
Toluene	2.0	< 2.0
1,1,1-Trichloroethane	2.0	< 2.0
1,1,2-Trichloroethane	2.0	< 2.0
Trichloroethene	2.0	< 2.0
Trichlorofluoromethane	2.0	< 2.0
1,2,3-Trichloropropane	2.0	< 2.0
Vinyl acetate	5.0	< 5.0
Vinyl chloride	5.0	< 5.0
ortho-Xylene	2.0	< 2.0
meta and para-Xylene	2.0	< 2.0
Iodomethane	10.	<10.
trans 1,4-Dichloro-2-Butene	10.	<20.

Analytical Results — TENTATIVELY IDENTIFIED COMPOUNDS

Units = µg/L (ppb)

Compound:	Detection Limit:	Amount Detected:
None Detected	20.	

< Value = None detected above the specified method detection limit, or a value that reflects a reasonable limit due to interferences.

T = Trace. Detectable amount is lower than the practical quantitation limit for this compound.

Released by: _____
Laboratory Supervisor

Report Date 3/15/93

THIS REPORT IS PROVIDED FOR THE EXCLUSIVE USE OF THE ADDRESSEE. PRIVILEGES OF SUBSEQUENT USE OF THE NAME OF THIS COMPANY OR ANY MEMBER OF ITS STAFF, OR REPRODUCTION OF THIS REPORT IN CONNECTION WITH THE ADVERTISEMENT, PROMOTION OR SALE OF ANY PRODUCT OR PROCESS OR IN CONNECTION WITH THE RE-PUBLICATION OF THIS REPORT FOR ANY PURPOSE THAN FOR THE ADDRESSEE WILL BE GRANTED ONLY ON

Level I QC

Lab #13287

CHAIN-OF-CUSTODY RECORD

CLIENT Sevier County

PROJECT TITLE Sevier County Landfill

JOB NO. 1687

FIELD PERSONNEL (Signature) Dean Henderson

DATE	TIME	SAMPLE I.D. NO.	SAMPLE TYPE	NO. OF CONTAINERS	SAMPLING SITE	REMARKS
2/25/93	11:00	MW-1	Water	6	MW-1	Analyze for
2/25/93	11:00	Trip Blank	"	2	Trip Blank	Parameters on
						table 1. (See Att.)

RELINQUISHED BY: (Signature)	DATE	TIME	RECEIVED BY: (Signature)	DATE	TIME
Dean Henderson	2/25/93	14:48	Jennifer Hall	2/25/93	1448

CLIENT Sevier County

ADDRESS

PHONE/FAX

CONTACT Mark Taggart

QUOTE#/P.O.#

PROJECT Proposed Sevier County Landfill

Dean C. Henderson

SAMPLER'S SIGNATURE

WEST ANALYTICAL LABORATORIES
463 West 3600 South
Salt Lake City, Utah 84115
(801) 263-8686
Fax (801) 263-8687

QA/QC Level I II

LAB # 15504

SAMPLE ID	SAMPLE DATE/TIME	MATRIX	# OF CONTAINERS	D LIST METALS	VOLATILES (624)	SEMIVOLATILES (625)	TDS	TURN AROUND TIME
MW-2	8-25-93/11:00	Water					✓	S

TURN AROUND TIMES
I = Priority I
II = Priority II
III = 5 Day Rush
S = Standard

COMMENTS

Special Instructions: Job # 1687

Relinquished By: Signature	Date/Time	Received By: Signature	Date/Time
Dean C. Henderson	8-25-93/16:16		
PRINT NAME Dean C. Henderson		PRINT NAME	
Relinquished By: Signature	Date/Time	Received By: Signature	Date/Time
PRINT NAME		PRINT NAME	
Dispatched By: Signature	Date/Time	Received for Laboratory By: Jennifer Hansel	Date/Time 8/25/93 1616
PRINT NAME		PRINT NAME Jennifer Hansel	

Well Log and Groundwater Analysis of Landfill Well

State of Utah
Division of Water Rights

For additional space, use "Additional Well Data Form" and attach

Well Identification WATER RIGHT APPLICATION: 63-4080(A68081)

Owner *Note any change*
Sevier County
250 North Main
Richfield, UT 84701

Contact Person/Engineer: _____

Well Location *COUNTY:* Sevier
SOUTH 2809 feet WEST 121 feet from the NE Corner of
SECTION 4, TOWNSHIP 23S, RANGE 1W, SLB&M.

Location Description: (address, proximity to buildings, landmarks, ground elevation, local well #) 3 miles E of Sigurd - Landfill

Drillers Activity Start Date: 16 Jan 1995 Completion Date: 28 Feb 1995 DOM

Check all that apply:
[x] New [ ] Repair [ ] Deepen [ ] Abandon [ ] Replace [ ] Public Nature of Use:

DEPTH (feet) FROM	TO	BOREHOLE DIAMETER (in)	DRILLING METHOD	DRILLING FLUID
0	25	12	Cable Tool	Water
25	121	10	" "	"
121	250	6	" "	"

Well Log

DEPTH (feet) FROM	TO	WATER	PERMEABLE high	PERMEABLE low	UNCONSOLIDATED CLAY	SILT	SAND	GRAVEL	COBBLES	BOULDER	OTHER	CONSOLIDATED ROCK TYPE	COLOR	DESCRIPTIONS AND REMARKS (include comments on *water quality* if known.)
0	14			x	x	x	x	x					Brown	when wet gray dry-loose
14	106		x		x		x	x	x				"	" " " " " Fairly stable
106	158		x								x	Volcanics	Black	Very loose-likely talas material
158	182		x				x						"	
182	215	x	x								x	Same as 106-158		Water at 165'
215	232				x	x	x	x					Brown	Volcanic-clay mix
232	250		x		x	x	x						Red	Clay-volcanic mix

Static Water Level

Date 7 Feb 1995 Water Level 165 feet Flowing? ☐ Yes ☐ No

Method of Water Level Measurement Electric probe If Flowing, Capped Pressure _____ PSI

Point to Which Water Level Measurement was Referenced Top of casing

Height of Water Level reference point above ground surface 2 feet Temperature 69 ☐ °C ☒ °F

Construction Information

DEPTH (feet) FROM	TO	CASING: CASING TYPE AND MATERIAL/GRADE	WALL THICK (in)	NOMINAL DIAM. (in)	DEPTH (feet) FROM	TO	SCREEN [ ] PERFORATIONS [ ]: SLOT SIZE OR PERF SIZE (in)	SCREEN DIAM. OR PERF LENGTH (in)	SCREEN TYPE OR NUMBER PERF (per round/interval)
0	250	Steel	.250	6	185	234	¼x1		4/8"

Well Head Configuration: Cast Iron well cap Access Port Provided? [X] Yes [ ] No

Casing Joint Type: Weld Perforator Used: Mills Knife

DEPTH (feet) FROM	TO	FILTER PACK / GROUT / PACKER / ABANDONMENT MATERIAL: ANNULAR MATERIAL, ABANDONMENT MATERIAL and/or PACKER DESCRIPTION	Quantity of Material Used (if applicable)	GROUT DENSITY (lbs./gal.,# bag mix, gal./sack etc.)
0	120	Cement grout	5½ yds	50/50 mix sand-cem

Well Development / Pump or Bail Tests

Date	Method	Yield	Units Check One GPM	Units Check One CFS	DRAWDOWN (ft)	TIME PUMPED (hrs & min)
8-9 Feb 95	Develop-surge block & bailer					
15 Feb 95	Pump test	200	X		0.5	24 hrs

Pump (Permanent)

Pump Description: "Grundfos" 40S50-14 Horsepower: 5 Pump Intake Depth: 214 feet

Approximate maximum pumping rate: 50 GPM Well disinfected upon completion? [X] Yes [ ] No

Comments

Description of construction activity, additional materials used, problems encountered, extraordinary circumstances, abandonment / procedures. *Use additional well data form for more space.*

Unusually large body of clean, loose volcanic material (likley talas) that water moves through very freely.

Well Driller Statement

This well was drilled or abandoned under my supervision, according to applicable rules and regulations, and this report is complete and correct to the best of my knowledge and belief.

Name Fletcher Drilling Inc. License No. 521
(Person, Firm, or Corporation - Print or Type)

Signature [signature] Date 24 Mar 1995
(Licensed Well Driller)

CHEMTECH • FORD

ANALYTICAL LABORATORIES

Chemical and Bacteriological Testing

LABORATORY REPORT

CLIENT: JONES & DEMILLE ENG.
c/o Tristan DeMille
45 E. 500 North
Richfield, UT 84701

LAB NUMBER: **95-120330**

SAMPLE ID: System #;
Source: ~~Service Co~~. Landfill Tap from test pumping

DATE COLLECTED: 2/15/95, 8:12 a.m.
COLLECTED BY: J.S.
DATE RECEIVED: 2/15/95
REPORT DATE: 2/27/95

REPORT SUMMARY

This drinking water sample was analyzed for volatile organic compounds/trihalomethanes, inorganic and metals. All analyzed compounds were below the associated MCL's.

Results of all associated quality control samples were within acceptance limits. No project-specific quality control was requested.

If you have any questions concerning this report, please call us at (801) 466-8761.

Approved By: _____

○ FORD • 40 West Louise Avenue • Salt Lake City, Utah 84115 • (801) 466-8761 • Fax (801) 466-8763
○ CHEMTECH • 6100 South Stratler • Murray, Utah 84107 • (801) 262-7299 • Fax (801) 262-7378

CHEMTECH • FORD

ANALYTICAL LABORATORIES

Chemical and Bacteriological Testing

CERTIFICATE OF ANALYSIS

CLIENT: JONES & DEMILLE ENG.

SAMPLE NAME: System #: **95-120330**

Source: Sevier Co. Landfill Tap from test pumping

	Result	MDL	MCL	Units	Method	Notes
VOLATILE ORGANIC COMPOUNDS (VOC's)						
1,1,1-Trichloroethane	ND	0.5	200	ug/L	524.2	
1,1,2-Trichloroethane	ND	0.5	5	ug/L	524.2	
1,1-Dichloroethylene	ND	0.5	7	ug/L	524.2	
1,2,4-Trichlorobenzene	ND	0.5	70	ug/L	524.2	
1,2-Dichloroethane	ND	0.5	5	ug/L	524.2	
1,2-Dichloropropane	ND	0.5	5	ug/L	524.2	
Benzene	ND	0.5	5	ug/L	524.2	
Carbon Tetrachloride	ND	0.5	5	ug/L	524.2	
Chlorobenzene	ND	0.5	100	ug/L	524.2	
Dichloromethane	ND	0.5	5	ug/L	524.2	
Ethylbenzene	ND	0.5	700	ug/L	524.2	
Styrene	ND	0.5	100	ug/L	524.2	
Tetrachloroethylene	ND	0.5	5	ug/L	524.2	
Toluene	0.77	0.5	1000	ug/L	524.2	
Total Xylenes	ND	0.5	10000	ug/L	524.2	
Trichloroethylene (TCE)	ND	0.5	5	ug/L	524.2	
Vinyl Chloride	ND	0.5	2	ug/L	524.2	
cis-1,2-Dichloroethylene	ND	0.5	70	ug/L	524.2	
m-Xylene	ND	0.5		ug/L	524.2	
o-Dichlorobenzene	ND	0.5	600	ug/L	524.2	
o-Xylene	ND	0.5		ug/L	524.2	
p-Dichlorobenzene	ND	0.5	75	ug/L	524.2	
p-Xylene	ND	0.5		ug/L	524.2	
trans-1,2-Dichloroethylene	ND	0.5	100	ug/L	524.2	

TRIHALOMETHANES						
Bromodichloromethane	ND	0.5	100	ug/L	524.2	
Bromoform	ND	0.5	100	ug/L	524.2	
Chloroform	ND	0.5	100	ug/L	524.2	
Dibromochloromethane	ND	0.5	100	ug/L	524.2	
Total Trihalomethanes	ND	0.5	100	ug/L	524.2	

"ND" = None Detected above Utah MRL

○ FORD • 40 West Louise Avenue • Salt Lake City, Utah 84115 • (801) 466-8761 • Fax (801) 466-8763
○ CHEMTECH • 6100 South Stratler • Murray, Utah 84107 • (801) 262-7299 • Fax (801) 262-7378

CHEMTECH • FORD

ANALYTICAL LABORATORIES

Chemical and Bacteriological Testing

CERTIFICATE OF ANALYSIS

CLIENT: JONES & DEMILLE ENG.

SAMPLE NAME: System #: **95-120330**

Source: Sevier Co. Landfill Tap from test pumping

	Result	MDL	MCL	Units	Method	Notes
UNREGULATED ORGANICS						
1,1,1,2-Tetrachloroethane	ND	1	—	ug/L	524.2	
1,1,2,2-Tetrachloroethane	ND	1	—	ug/L	524.2	
1,1-Dichloroethane	ND	1	—	ug/L	524.2	
1,1-Dichloropropene	ND	1	—	ug/L	524.2	
1,2,3-Trichlorobenzene	ND	1	—	ug/L	524.2	
1,2,3-Trichloropropane	ND	1	—	ug/L	524.2	
1,2,4-Trimethylbenzene	ND	1	—	ug/L	524.2	
1,3,5-Trimethylbenzene	ND	1	—	ug/L	524.2	
1,3-Dichloropropane	ND	1	—	ug/L	524.2	
1,3-Dichloropropene	ND	1	—	ug/L	524.2	
2,2-Dichloropropane	ND	1	—	ug/L	524.2	
Bromobenzene	ND	1	—	ug/L	524.2	
Bromochloromethane	ND	1	—	ug/L	524.2	
Bromodichloromethane	ND	1	—	ug/L	524.2	
Bromoform	ND	1	—	ug/L	524.2	
Bromomethane	ND	1	—	ug/L	524.2	
Chlorodibromomethane	ND	1	—	ug/L	524.2	
Chloroethane	ND	1	—	ug/L	524.2	
Chloroform	ND	1	—	ug/L	524.2	
Chloromethane	ND	1	—	ug/L	524.2	
Dibromomethane	ND	1	—	ug/L	524.2	
Dichlorodifluoromethane	ND	1	—	ug/L	524.2	
Fluorotrichloromethane	ND	1	—	ug/L	524.2	
Hexachlorobutadiene	ND	1	—	ug/L	524.2	
Isopropylbenzene	ND	1	—	ug/L	524.2	
m-Dichlorobenzene	ND	1	—	ug/L	524.2	
n-Butylbenzene	ND	1	—	ug/L	524.2	
n-Propylbenzene	ND	1	—	ug/L	524.2	
Naphthalene	ND	1	—	ug/L	524.2	
o-Chlorotoluene	ND	1	—	ug/L	524.2	
p-Chlorotoluene	ND	1	—	ug/L	524.2	
p-Isopropyltoluene	ND	1	—	ug/L	524.2	
sec-Butylbenzene	ND	1	—	ug/L	524.2	
tert-Butylbenzene	ND	1	—	ug/L	524.2	

"ND" = None Detected above Utah MRL

○ FORD • 40 West Louise Avenue • Salt Lake City, Utah 84115 • (801) 466-8761 • Fax (801) 466-8763
○ CHEMTECH • 6100 South Stratler • Murray, Utah 84107 • (801) 262-7299 • Fax (801) 262-7378

CHEMTECH • FORD

ANALYTICAL LABORATORIES

Chemical and Bacteriological Testing

CERTIFICATE OF ANALYSIS

CLIENT: JONES & DEMILLE ENG.

SAMPLE NAME: System #: **95-120330**

Source: Sevier Co. Landfill Tap from test pumping

	Result	*MDL*	*MCL*	*Units*	*Method*	*Notes*
INORGANICS AND METALS						
Cyanide	ND	0.05	0.2	mg/L	D2036	
Fluoride	0.4	0.1	4	mg/L	340.2	
Total Dissolved Solids (TDS)	826	20	1000	mg/L	160.1	
Turbidity	ND	0.5	5 or 1	NTU	120.1	
Antimony, Sb	ND	0.003	0.006	mg/L	200.7	
Arsenic, As	0.005	0.005	0.05	mg/L	200.7	
Barium, Ba	0.014	0.1	2	mg/L	200.7	
Beryllium, Be	ND	0.001	0.004	mg/L	200.7	
Cadmium, Cd	ND	0.001	0.005	mg/L	200.7	
Chromium, Cr	ND	0.007	0.1	mg/L	200.7	
Copper, Cu	ND	0.05	TT	mg/L	200.7	
Lead, Pb	ND	0.005	0.015, TT	mg/L	200.9	
Mercury, Hg	ND	0.0002	0.002	mg/L	245.1	
Nickel, Ni	ND	0.01	0.1	mg/L	200.7	
Selenium, Se	ND	0.002	0.05	mg/L	200.9	
Sodium, Na	234	1	—	mg/L	200.7	
Sulfate, SO4	23	5	500	mg/L	375.4	
Thallium, Tl	ND	0.001	0.002	mg/L	200.9	
Nitrate NO3-N	0.779	0.02	10	mg/L	353.1	
Nitrite NO2-N	ND	0.005	1	mg/L	354.1	

"ND" = None Detected above Utah MRL

○ FORD • 40 West Louise Avenue • Salt Lake City, Utah 84115 • (801) 466-8761 • Fax (801) 466-8763
○ CHEMTECH • 6100 South Stratler • Murray, Utah 84107 • (801) 262-7299 • Fax (801) 262-7378

Appendix C

utah.gov Search Utah.gov

UTAH DIVISION OF WATER RIGHTS

WRPLAT Program Output Listing

Version: 2004.03.26.00 Rundate: 06/28/2004 04:01 PM

Radius search of 15840 feet from a point S3000 E0 from the NW corner, section 03, Township 23S, Range 1W, SL b&m Criteria:wrtypes=W,C,E podtypes=all status=U,A,P usetypes=all

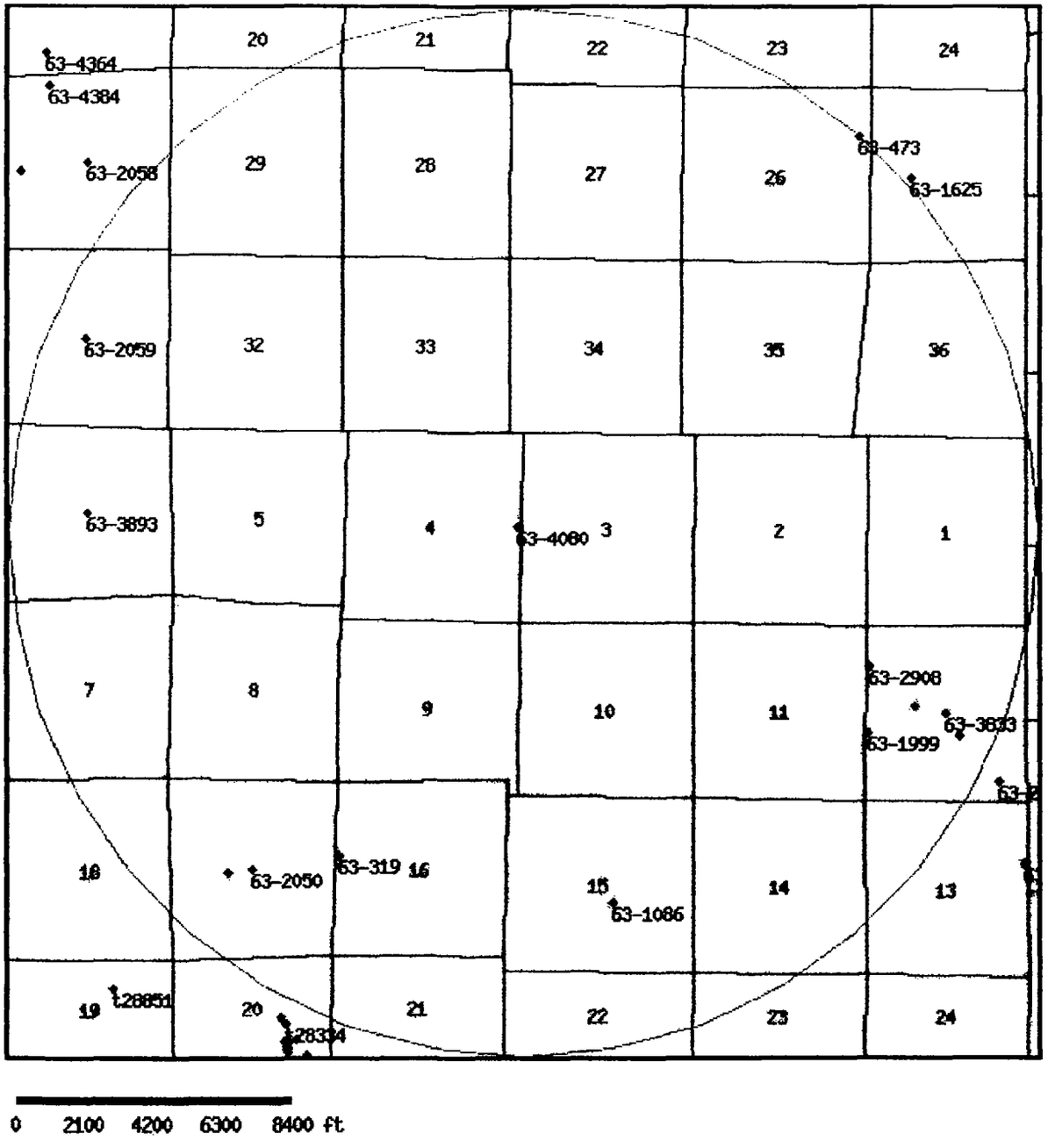

Water Rights

WR Number	Diversion Type/Location	Well Log	Status	Priority	Uses	CFS	ACFT	Owner Name
63-1086	Underground N2044 E194 S4 15 23S 1W SL		P	19000000	I	0.067	0.000	J. L. Davis Venice UT
63-1620	Underground N495 E1320 SW 19 22S 1W SL		P	19190606	I	104.000	0.000	Inc. Willow Bend Irrigation Company Aurora UT 84620
63-1625	Underground S57 E1223 W4 25 22S 1W SL		P	19380329	O	0.000	0.000	Hans P. Dittevson Salina UT 84654
63-1748	Underground S396 E528 W4 30 22S 1W SL	well info	P	19680923	S	0.015	0.000	Michael D. and Cynthia L. Roberts P. O. Box 570081
63-1999	Surface N2028 E106 SW 12 23S 1W SL		P	19030000	OS	0.001	0.000	Richfield District USA Bureau of Land Management 150 East 900 North
63-2504	Surface N3420 W1567 SE 20 23S 1W SL		P	18700000	M	0.640	0.000	Town of Sigurd Sigurd UT 84657
63-2504	Underground N2737 W1048 SE 20 23S 1W SL		P	18700000	M	0.640	0.000	Town of Sigurd Sigurd UT 84657
63-2504	Surface N2262 W765 SE 20 23S 1W SL		P	18700000	M	0.640	0.000	Town of Sigurd Sigurd UT 84657
63-2906	Surface N600 W900 SE 12 23S 1W SL		P	19030312	OS	0.007	0.000	Richfield District USA Bureau of Land Management 150 East 900 North
63-2907	Surface		P	19030312	OS	0.004	0.000	Richfield District USA Bureau of Land Management

	N1950 W2100 SE 12 23S 1W SL						150 East 900 North
63-2908	Surface	P	19030312	OS	0.015	0.000	Richfield District USA Bureau of Land Management
	S1180 W4800 NE 12 23S 1W SL						150 East 900 North
63-2909	Surface	P	19030312	OS	0.010	0.000	Richfield District USA Bureau of Land Management
	N2890 W3500 SE 12 23S 1W SL						150 East 900 North
63-3144	Surface	P	1877	IS	0.000	15969.880	Rocky Ford Canal Company - Inc.
	S500 W3750 NE 30 22S 1W SL						c/o Gary Mason, Sec.
63-3151	Surface	P	1872		0.000	7989.800	Willow Bend Irrigation Company
	N495 E1320 SW 19 22S 1W SL						P.O. Box 181
63-3151	Rediversion	P	1872		0.000	7989.800	Willow Bend Irrigation Company
	S500 W3750 NE 30 22S 1W SL						P.O. Box 181
63-3180	Surface	P	18700000	I	3.160	0.000	G. W. Nebeker Jr.
	S2900 E1800 NW 17 23S 1W SL						Sigurd UT 84657
63-3181	Surface	P	18700000	DS	0.010	0.000	G. W. Nebeker Jr.
	S2900 E1800 NW 17 23S 1W SL						Sigurd UT 84657
63-319	Underground	P	19560121	S	0.015	0.000	A. Bryant and J. Llewellyn Young
	N330 E100 W4 16 23S 1W SL						Richfield UT 84701
63-3953	Surface	P	1903	OS	0.015	0.000	Richfield District USA Bureau of Land Management
	N3400 W150 SE 13 23S 1W SL						150 East 900 North
63-4080	Underground well	P	19940817	D	0.000	0.450	Sevier County

	info						
	S2818 W138 NE 04 23S 1W SL						250 North Main
63-4227	Surface	P	1877		0.000	0.000	Rocky Ford Canal Company Inc.
	S500 W3750 NE 30 22S 1W SL						c/o Gary Mason, Sec.
63-4230	Surface	P	1872	I	0.000	2.400	Thomas J. and Flavia G. Ramey
	S500 W3750 NE 30 22S 1W SL						P.O. Box 483
63-4243	Surface	P	1872	I	0.000	2.120	Jerald R. Jacobsen
	N495 E1320 SW 19 22S 1W SL						P.O. Box 98
63-4243	Rediversion	P	1872	I	0.000	2.120	Jerald R. Jacobsen
	S500 W3750 NE 30 22S 1W SL						P.O. Box 98
63-4250	Surface	P	1877		0.000	17.400	Ken Johnson
	S500 W3750 NE 30 22S 1W SL						700 E. 800 N.
63-4286	Surface	P	1872	I	0.000	2.090	Willow Bend Irrigation Company
	N495 E1320 SW 19 22S 1W SL						Aurora UT 84620
63-4364	Surface	P	1872	I	0.000	3.590	Willow Bend Irrigation Company
	N495 E1320 SW 19 22S 1W SL						Aurora UT 84620
63-4364	Rediversion	P	1872	I	0.000	3.590	Willow Bend Irrigation Company
	S500 W3750 NE 30 22S 1W SL						Aurora UT 84620
63-4384	Surface	A	1877	I	0.000	1.200	Rocky Ford Canal Company
	S500 W3750 NE 30 22S 1W SL						P.O. Box 111
63-473	Underground	P	1908	MS	1.000	0.000	a municipal corporation Salina City
	S1452 W376 NE 26 22S 1W SL						Salina UT 84654
63-58	Surface	P	19390522	M	0.254	0.000	Town of Sigurd

	N3420 W1567 SE 20 23S 1W SL					Sigurd UT 84657
63-58	Underground	P	19390522 M	0.254	0.000	Town of Sigurd
	N2737 W1048 SE 20 23S 1W SL					Sigurd UT 84657
63-58	Surface	P	19390522 M	0.254	0.000	Town of Sigurd
	N2262 W765 SE 20 23S 1W SL					Sigurd UT 84657
63-59	Surface	P	19390522	0.254	0.000	Town of Sigurd
	N3420 W1567 SE 20 23S 1W SL					Sigurd UT 84657
63-59	Underground	P	19390522	0.254	0.000	Town of Sigurd
	N2737 W1048 SE 20 23S 1W SL					Sigurd UT 84657
63-59	Surface	P	19390522	0.254	0.000	Town of Sigurd
	N2262 W765 SE 20 23S 1W SL					Sigurd UT 84657
63-895	Underground	P	19090000 I	0.080	0.000	Kings Meadow Ranches Inc.
	N6 W1438 E4 20 23S 1W SL					a Corporation
63-896	Underground	P	19090000 I	0.080	0.000	Kings Meadow Ranches Inc.
	S156 W1358 E4 20 23S 1W SL					a Corporation
63-897	Underground	P	19090000 I	0.080	0.000	Kings Meadow Ranches Inc.
	S290 W1372 E4 20 23S 1W SL					a Corporation
63-899	Underground	P	19090000 I	0.080	0.000	Kings Meadow Ranches Inc.
	N15 W1320 E4 20 23S 1W SL					a Corporation
a24849	Surface	A	20000821 O	0.230	27.650	Kings Meadow Ranches
	S2100 W1400 NE 20 23S 1W SL					ATTN: Evan Dastrup
t24850	Surface	A	20000821 O	0.360	43.340	Kings Meadow Ranches
	S2100 W1400 NE 20 23S 1W SL					ATTN: Evan Dastrup

t28334	Surface S2100 W1400 NE 20 23S 1W SL	U	20031009 O	0.000	14.000	Sevier Valley Canal Company P.O. Box 245
t28851	Underground S869 W1901 SW 17 23S 1W SL	A	20040407 O	0.000	14.000	Kenneth A. and Janette C. Dastrup 345 South Main
63-2047	Point to Point 0 0 06 23S 1W SL	P	19030000 OS	0.010	0.000	Richfield District USA Bureau of Land Management 150 East 900 North
63-2050	Point to Point 0 0 17 23S 1W SL	P	19030000 OS	0.010	0.000	Richfield District USA Bureau of Land Management 150 East 900 North
63-2057	Point to Point 0 0 30 22S 1W SL	P	19030000 OS	0.009	0.000	Richfield District USA Bureau of Land Management 150 East 900 North
63-2058	Point to Point 0 0 30 22S 1W SL	P	19030000 OS	0.009	0.000	Richfield District USA Bureau of Land Management 150 East 900 North
63-2059	Point to Point 0 0 31 22S 1W SL	P	19030000 OS	0.009	0.000	Richfield District USA Bureau of Land Management 150 East 900 North
63-3833	Point to Point 0 0 12 23S 1W SL	P	1903 OS	5.030	0.000	Richfield District USA Bureau of Land Management 150 East 900 North
63-3893	Point to Point 0 0 06 23S 1W SL	P	1903 OS	0.040	0.000	Richfield District USA Bureau of Land Management 150 East 900 North

Appendix D

PLAN OF OPERATION

SAGE FLAT LANDFILL
SEVIER COUNTY, UTAH

AUGUST 2004

Prepared by
Jones & DeMille Engineering

1535 South 100 West
Richfield, UT 84701
Ph: 435-896-8266
FAX: 435-896-8268

Table of Contents

1.0 INTRODUCTION 1

2.0 OPERATIONAL PROCEDURES 1
2.1 Class I Site 1
2.2 Class IV Site 2

3.0 WASTE HANDLING PROCEDURES 2
3.1 Litter Control 3
3.2 Recycling Programs 4

4.0 ALTERNATIVE WASTE HANDLING OR DISPOSAL PLAN 4

5.0 LANDFILL INSPECTIONS & MONITORING SCHEDULE 4

6.0 LEACHATE MONITORING 5

7.0 EQUIPMENT 5

8.0 PROCEDURES FOR CONTROLLING DISEASE VECTORS 6

9.0 TRAINING & SAFETY PLAN FOR SITE OPERATION 6

10.0 CONTINGENCY PLANS 7
10.1 Fire or Explosion 7
10.2 Explosive Gas Release 8
10.3 Failure of Containment System 8
10.4 Contaminated Groundwater 8

11.0 RECORD KEEPING 8
11.1 Samples of Record Keeping Forms 8

12.0 REPORTING 9

Appendices

Appendix A - Examples of Record Keeping Forms

1.0 INTRODUCTION

The purpose of the Plan of Operation is to provide a written description of the daily operation of the Sevier County Sage Flat Landfill. A landfill is a dynamic system which undergoes regular development. Changes may occur in types and quantities of disposal materials, demographics of the service area, or administrative and regulatory requirements. These changes need to be reflected in the manner in which the landfill is operated to conserve landfill space and protect human health and the environment. The intent of the Plan of Operation is to provide an accurate description of the daily operations and procedures while allowing for modification which may be required to compensate for operational changes.

2.0 OPERATIONAL PROCEDURES

2.1 Class I Site

The cells at the Class I site will be constructed in an orderly sequence from north to south. Each cell will be constructed in a phased approach. The phases will include: (1) marking the boundary of the area to be excavated; (2) striping and stockpiling the topsoil layer for future final cover; (3) excavation of the trench for disposal and waste placement; (4) intermediate cover over the full disposal cell; (5) placement of compacted embankment along outside edge of cell and placement of waste over intermediate cover, and; (6) final cover placement of clay, native soil, topsoil, and vegetation over the full disposal cell.

The topsoil cover will be stripped to a minimum depth of 4 inches and stockpiled along the southern edge of the cell. Shrubs and debris will be removed from the topsoil. The topsoil berm will create a barrier to restrict access along the top of the sideslopes. The material excavated from the trench will be stockpiled along the north edge of the vertical sideslope to create a barrier to restrict access along the north edge of the trench. The trench will be excavated so that only 180 feet of trench is exposed at any time.

The working face of the trench (west end) and the equipment access (east end) will be constructed to a maximum slope of 3 horizontal to 1 vertical. Waste will be unloaded at the top of the working face and spread over the working face and compacted. The native clay will be mixed with the solid waste throughout daily placement. The unloading of waste will be restricted to one area of the working face to limit vehicular traffic and to limit the amount of waste exposed.

The bottom of the trench will be lined with a minimum of 2 feet of compacted clay with a permeability no greater than 10^{-7} cm/sec. This clay material will be obtained from materials excavated from on-site. The compacted clay layer at the bottom of the trench will be constructed in advance of the solid waste disposal.

An intermediate cover will be placed over the solid waste once it has been placed to the level of the existing ground. The intermediate cover will consist of a minimum thickness of 18-inches of native soils stockpiled from the excavated trench. The intermediate cover will be compacted to facilitate trafficability over the waste in the cells. A 6-inch layer of gravel will be placed over the intermediate cover in the unloading area at the top of the working face to improve trafficability during inclement weather conditions. This gravel material is a temporary measure to improve access to the working face.

A compacted embankment will be constructed around the outside edges of the cell. This will allow for additional waste to be placed above the existing ground surface. After the compacted embankment is in place, the waste will be placed over the intermediate cover.

The final cover will consist of 18-inches of compacted clay within in-place permeability of no greater than 10-7 cm/sec. The compacted clay layer will be covered with 20 inches of material consisting of 14 inches of native soil and a 6 inch thick topsoil layer will be placed over the top. The topsoil will be available from the stripped and stockpiled topsoil material. The final cover will have a 3% cross slope and will be reseeded.

2.2 Class IV Site

The Class IV site will be excavated approximately two to four feet below the ground surface. Cover material will be stockpiled from the excavated soil available form the initial development of the Class IV site. The final closure cover for the Class IV site will consist of 2 feet of cover, including 6-inches of topsoil that will be reseeded.

3.0 WASTE HANDLING PROCEDURES

One of the County Commissioners has been designated as the Director of Solid Waste Services and has supervisory responsibility over the landfill. Daily operation of the landfill is under the direction of the Landfill Manager. When the Landfill Manager is absent, a senior operator will be designated in charge of the landfill.

At the beginning of each working day, the Landfill Manager is responsible for informing his operators where to direct the various types of waste for disposal. The operator will direct each customer to the proper location for disposal of the waste. The landfill will be attended by an operator or the Landfill Manager at all times that the landfill is open.

The landfill has a scale for weighing waste loads that are brought to the landfill. The scale is located next to the maintenance building, which is at the main entrance to the landfill. Each waste land is weighed prior to disposal.

The landfill specifically excludes the following types of waste:

- hazardous waste
- toxic waste and pathological/infectious waste
- chemical wastes
- white goods containing chlorofluorocarbons

The person at the gate and the person at the working face are each responsible for identification and prohibition of excluded wastes. All employees will be trained in methods and techniques for spotting liquid waste, drums, waste in sealed container, red-bag waste, and waste which exhibits unusual odors or markings. All such waste will be refused access to the landfill; if such waste is discovered on the working face it will be segregated from the other waste pending alternative disposal.

At least one percent of incoming loads are to be inspected. Loads will be selected at random by the operator at the gate. The vehicle will be stopped and the operator will conduct as thorough inspection as possible, looking specifically for prohibited waste materials. A "Waste Inspection Report" form (see Appendix sheet A-2) will be completed and filed on every inspection conducted. The daily operating log also notes waste inspection conducted. (see Appendix sheet A-5)

The Landfill Manager will have the ultimate authority and responsibility to decide whether to accept or reject a waste material.

Construction and demolition debris will be directed to the Class IV Landfill for disposal. Dead animal carcasses will be directed to a separate pit designated for disposal of such waste; this pit will be covered regularly on a daily basis.

The landfill is open Monday through Saturday and is closed on Sundays and Holidays. The landfill will be open according to the following schedule.

Summer Schedule April through September	Winter Schedule October through March
8:00 – 6:30 Mon. – Sat.	8:00 – 5:30 Mon. – Sat.

3.1 Litter Control

The prevailing winds at the landfill site are generally from the southwest. Clay is mixed with the waste during daily placement and that helps reduce the amount of litter scattered by the wind. The Class I landfill site is also partially enclosed by a chain link fence. The fence helps stop litter from being blown away from the landfill site. Occasionally there is litter from the landfill that is scattered by the wind. At least once every two weeks, a work crew of inmates from the Sevier County Jail comes to the landfill site to pickup any scattered litter at the landfill. These measures help the control and collection of litter.

3.2 Recycling Programs

At the present time, there are no recycling programs planned for the Sevier County Landfill. Due to the small population base and distance between the landfill and populations centers, it is not economically feasible to have a recycling program associated with the landfill. If conditions change and make recycling economically feasible, then a recycling program will be considered.

4.0 ALTERNATIVE WASTE HANDLING OR DISPOSAL PLAN

The landfill has one crawler and one compactor. In the event that one unit of equipment can not operate due to maintenance or repair, the other unit will be utilized to push refuse to the working face and to mix native clay with the refuse. No contingency is planned for additional compaction equipment.

The landfill site comprises a total of approximately 460 acres, and is large enough that if a portion of the site had to be closed due to emergency, or became inaccessible, it is likely that another area could be designated to receive waste materials on a temporary basis. If on-site roads become impassible, the Landfill Manager may elect to temporarily close the Site; the Director of Solid Waste Services may choose to place a bulk container at the entrance to the landfill for temporary use by residents until the Landfill becomes accessible.

5.0 LANDFILL INSPECTIONS & MONITORING SCHEDULE

The schedule for inspections and monitoring of landfill facilities to ensure proper operation and maintenance is provided in Table 1.

Table 1
INSPECTION AND MONITORING SCHEDULE

Inspection/Monitoring Activity	Frequency
Access road condition and maintenance	During operation as needed
Fence inspection and maintenance	Monthly
Post closure final cover inspection	Monthly
Drainage channels condition	Monthly
Landfill equipment maintenance	As per manufacturer's recommendations
Leachate sampling	Semiannually
Collection leachate monitoring	Monthly – 1st year Quarterly thereafter
Gas monitoring	Quarterly

6.0 LEACHATE MONITORING

Leachate collection pipes will be installed in each cell to monitor any leachate-generation. The collection pipes will be monitored monthly for the first year of landfill operation and quarterly thereafter depending on the rate of leachate generation.

Inspection maintenance procedures for the leachate collection pipes will consist of a visual inspection performed annually which includes visually checking the leachate collection monitoring cover for cracks, shifting or other damage. If damage to the pipes are discovered, these sections will be repaired as necessary and practical.

Details of the inspection and maintenance activities will be recorded in a field notebook and copies will be kept on file at the Site. This inspection/maintenance procedure will be conducted annually for the first five years after placement of the cover. If the system has no problems during this time period, inspections will be performed every 2 years thereafter until completion of the post-closure monitoring.

Leachate collection closure will be performed only when one of the following criteria are met:

1) Post closure monitoring has been completed, or
2) The leachate collection system is damaged beyond repair, or
3) The leachate collection system is permanently abandoned.

Leachate collection closure will be accomplished by pressure grouting, using sand, cement and a bentonite slurry mixture to a maximum pressure of 125 psi. Grouting will be performed from the cleanout port back into the transfer pipe. The volume of slurry mixture pumped will be measured to determine the quantity of slurry injected into the transfer pipe. The standpipe will also be filled with the slurry mixture.

7.0 EQUIPMENT

The Sevier County Sage Flat Landfill operation owns and maintains the following pieces of heavy equipment:

- Caterpillar 140 Motor Grader
- Caterpillar D-7H Track-type Dozer
- Caterpillar 816F Compactor
- Caterpillar 621 Scraper
- Army Scraper 280 Michigan
- Caterpillar 973 Track Loader
- Caterpillar 950 Rubber Tire Loader
- Ingersoll-Rand Sheeps Foot Compactor
- 1993 Peter-built Dump Truck
- 1991 Peter-built Dump Truck
- Caterpillar Backhoe (Rubber Tire)
- Trailer (for Backhoe)
- 2 Pickup Trucks

Complete service is performed every 125 hours of operation. Lubrication only every 10-15 hours of operation. Service is performed according to the manufacturer's recommendations.

8.0 PROCEDURES FOR CONTROLLING DISEASE VECTORS

Exclusion of specific types of solid wastes will be necessary to control disease vectors and the subsequent spread of disease. Special wastes such as infectious waste and liquid wastes, which may directly carry disease or lead to the propagation of disease vectors, will be excluded from the Class I landfill. Clay will be mixed with the waste for the Class I landfill and that will help control disease vectors. Dead animals will be received at the Class IV landfill; however, they will be buried at a separate location at the site and will be covered with a minimum of six inches of backfill material daily or upon disposal.

9.0 TRAINING & SAFETY PLAN FOR SITE OPERATION

Each employee who works with solid waste at the Sevier County Landfill facility will be trained and have a working knowledge of basic maintenance and operational techniques necessary to operate and maintain the landfill facility in a manner which does not endanger human health and safety or environmental quality. Training will be accomplished through on-the-job training (OJT) and class room training sessions. Training sessions will be those sponsored by the Solid Waste Association of North America (SWANA). All operators and managers will complete at a minimum the following courses of instruction: "Landfill Operator Training", and "Waste Screening at Municipal Solid Waste Landfills." The training program will be directed by the facility manager, or a designated professional trainer. Initial on the job training will be completed within three months of employment followed by completion of SWANA courses within one year.

TRAINING SCHEDULE

A. *Introductory Training* (half hour minimum): Synopsis of solid waste regulations, record keeping and transporter requirements.

Requirement:	All Personnel
Method:	OJT
Review:	Annual

B. *Policies and Procedures* (half hour minimum): Security, inspections and emergency response.

Requirement:	All Personnel
Method:	OJT, lecture/video course
Review:	Annual

C. *Safety* (one hour minimum): Personal protection, hazardous waste recognition, hazardous material handling, emergency response and first aid.

Requirement:	All Personnel
Method:	Lecture/video course
Review:	Annual

Training documents will be kept with this Plan of Operation for five years.

10.0 CONTINGENCY PLANS

This Contingency Plan is designed to minimize hazards to human health or the environment from any unplanned sudden or non-sudden discharge to air, soil, surface or groundwater. The provisions of this plan shall be carried out immediately when there is an emergency situation or release which could threaten human health or the environment. Emergency evacuation of the site will not be necessary given the nature of the waste materials stored and processed at the site. The probability of fire, explosion, or toxic vapor generation from an emergency incident is remote.

10.1 Fire or Explosion

A landfill fire or explosion would be particularly hazardous in the presence of discarded household chemicals, paints, fuels, etc.; however, wastage load monitoring is expected to effectively eliminate this potential. A fire may be started by spontaneous combustion in refuse containers, but is usually the result of vandalism or disposal of hot coals and ashes. Mixing clay with the waste will help prevent fires from spreading throughout the landfill.

The primary means of fire control will be the exclusion and or isolation of hot or burning loads. In the event that fires do erupt during operating hours, the burning material will be separated from other material and covered with soil, suing onsite earthmoving equipment. This action will be supported, when necessary, by the availability of additional equipment owned and operated by the County Road Department.

Small fires may be extinguished with fire extinguisher provided in the site vehicles or by using the water tank. Upon notification of an onsite fire or explosion which is not controllable with onsite fire protection equipment, a long blast on a vehicle horn will be sounded, nonessential equipment will be shut down, and all site personnel will assemble outside the landfill entrance. The Sigurd Fire Department will be alerted and all personnel will move to a safe distance from the involved area until the fire is extinguished. Secondary fire control will be supported by the Richfield City Fire Department and other fire departments in Sevier County as needed. The telephone number and location of the nearest fire station will be displayed in a conspicuous place in the site office. The landfill employees will participate in a fire drill conducted semi-annually.

Fires which occur during times that the landfill is closed are more difficult to control due to the time available for the fire to spread. If a fire is reported after hours, the Landfill Manager may utilize site equipment to segregate the burning portion and bury the fire with soil. Otherwise, the local fire department will be summoned to fight the fire.

10.2 Explosive Gas Release

Due to the size, remote location and arid nature of the site, significant amounts of explosive landfill gas is neither expected to be generated nor to migrate offsite. The landfill Manager is responsible for quarterly monitoring of landfill gas using a methane detection meter capable of measuring methane at levels below the Lower Explosive Limit (LEL). Gas monitoring will be conducted to test for methane at the LEL at the facility boundary and at twenty five percent of the LEL in the facility structures. In the event that explosive gases are detected above the LEL during monitoring, or at any other time, the emergency audible alarm and evacuation procedures will be implemented.

10.3 Failure of Containment System

Based on the trench mound design being constructed, there are no containment systems proposed at the site.

10.4 Contaminated Groundwater

The proposed vadose zone moisture monitoring will monitor the performance of the final cover and natural clay liner and provide early warning of any potential leachate migration toward the groundwater. In the event that free liquids are detected in the leachate collection system, the leachate will be analyzed to determine the chemical composition. If the leachate exhibits constituents with concentrations above groundwater maximum concentration limits, a program will be developed to install monitor wells and monitor groundwater quality. In the event groundwater exceeds maximum concentration limits, a corrective action plan will be developed and submitted to the Utah Division of Solid and Hazardous Waste.

11.0 RECORD KEEPING

11.1 Samples of Record Keeping Forms

The following records will be kept on site at the landfill.

1. A daily operating record containing the weights or volumes of waste, the number of vehicles entering the landfill, and the types of waste received.

2. Up to date training records for landfill personnel.

3. Leachate and gas monitoring inspection records.

4. Operations Inspection Reports.

5. Copies of the Class I and IV Permits.

6. Landfill Operations Plan.

7. Vehicle Maintenance Records.

8. Permit Application.

9. Financial Assurance Documentation.

See Appendix A for examples of forms to be used for record keeping.

12.0 REPORTING

An annual report will be submitted to the Executive Secretary by March 1 of each year for the most recent calendar year of facility operation. The report will contain at a minimum:

- Name and address of facility.
- Calendar year covered by report.
- Quantity of waste in tons or volume in cubic yards, by waste type.
- Estimated in place density in pounds per cubic yards by waste type.
- Annual update on financial assurance mechanism identifying any adjustments which may be necessary.
- Leachate & gas monitoring results.
- Training completed by personnel.

APPENDIX A

EXAMPLES OF RECORD KEEPING FORMS

TICKET BOOK FORM W/PRESSURE SENSITIVE COPIES

Sevier County Landfill

DATE: _____ WASTE _____
ORIGINATION: _____
GROSS WEIGHT: _____
TARE WT: _____
NET WT: _____

VOLUME: _____
INSPECTED: ☐ ☐
Y N

RESULTS: _____
_____

OPERATOR SIGNATURE: _____

Sevier County Landfill

DATE: _____ WASTE _____
ORIGINATION: _____
GROSS WEIGHT: _____
TARE WT: _____
NET WT: _____

VOLUME: _____
INSPECTED: ☐ ☐
Y N

RESULTS: _____
_____

OPERATOR SIGNATURE: _____

Sevier County Landfill

DATE: _____ WASTE _____
ORIGINATION: _____
GROSS WEIGHT: _____
TARE WT: _____
NET WT: _____

VOLUME: _____
INSPECTED: ☐ ☐
Y N

RESULTS: _____
_____

OPERATOR SIGNATURE: _____

Sevier County Landfill

DATE: _____ WASTE _____
ORIGINATION: _____
GROSS WEIGHT: _____
TARE WT: _____
NET WT: _____

VOLUME: _____
INSPECTED: ☐ ☐
Y N

RESULTS: _____
_____

OPERATOR SIGNATURE: _____

Sevier County Landfill

DATE: _____ WASTE _____
ORIGINATION: _____
GROSS WEIGHT: _____
TARE WT: _____
NET WT: _____

VOLUME: _____
INSPECTED: ☐ ☐
Y N

RESULTS: _____
_____

OPERATOR SIGNATURE: _____

Sevier County Landfill

DATE: _____ WASTE _____
ORIGINATION: _____
GROSS WEIGHT: _____
TARE WT: _____
NET WT: _____

VOLUME: _____
INSPECTED: ☐ ☐
Y N

RESULTS: _____
_____

OPERATOR SIGNATURE: _____

SEVIER COUNTY
SAGE FLAT LANDFILL
WASTE INSPECTION REPORT

DATE:	
OPERATOR:	
WASTE ORIGINATION:	
WASTE TYPE:	
DRIVER:	
COMPANY:	
VEHICLE TYPE:	
NET WEIGHT:	
VOLUME:	
INSPECTION RESULTS:	

Operator Signature

SEVIER COUNTY
SAGE FLAT LANDFILL
INDIVIDUAL TRAINING RECORD

NAME:

JOB CLASSIFICATION:

TRAINING RECEIVED, DATE & SPONSOR:

Supervisors Signature Date

SEVIER COUNTY
SAGE FLAT LANDFILL
GENERAL INSPECTION REPORT

DATE:	
INSPECTOR:	
INSPECTION TYPE:*	
EQUIPMENT USED:	
INSPECTION RESULTS:	
COMMENTS:	

*To be used for O&M inspections, gas monitoring leachate monitoring and leachate sampling.

Inspectors Signature _____ Date _____

SEVIER COUNTY SAGE FLAT LANDFILL

DAILY OPERATING RECORD: DATE: _____ OPERATOR: _____

WASTE ORIGIN		TOTAL WEIGHT	TOTAL VOLUME	WASTE TYPE	TOTAL WEIGHT	TOTAL VOLUME	TOTAL LOADS	NO. WASTE INSPECTIONS
RICHFIELD	NO. SEMI-TRUCKS			HOUSEHOLD				
	NO. LARGE TRUCKS			WHITE GOODS				
	NO. PICKUPS			INERT INDUSTRIAL				
	NO. CARS			DEAD ANIMALS				
				TIRES				
				CLASS IV				
AURORA, SALINA	NO. SEMI-TRUCKS			HOUSEHOLD				
SIGURD, REDMOND	NO. LARGE TRUCKS			WHITE GOODS				
	NO. PICKUPS			INERT INDUSTRIAL				
	NO. CARS			DEAD ANIMALS				
				TIRES				
				CLASS IV				
ANNABELLA, CENTRAL	NO. SEMI-TRUCKS			HOUSEHOLD				
GLENWOOD, VENICE	NO. LARGE TRUCKS			WHITE GOODS				
	NO. PICKUPS			INERT INDUSTRIAL				
	NO. CARS			DEAD ANIMALS				
				TIRES				
				CLASS IV				
AUSTIN, ELSINORE,	NO. SEMI-TRUCKS			HOUSEHOLD				
MONROE, JOSEPH, SEVIER	NO. LARGE TRUCKS			WHITE GOODS				
	NO. PICKUPS			INERT INDUSTRIAL				
	NO. CARS			DEAD ANIMALS				
				TIRES				
				CLASS IV				
BURRVILLE, FREMONT JCT.	NO. SEMI-TRUCKS			HOUSEHOLD				
KOOSHARAM	NO. LARGE TRUCKS			WHITE GOODS				
	NO. PICKUPS			INERT INDUSTRIAL				
	NO. CARS			DEAD ANIMALS				
				TIRES				
				CLASS IV				
COUNTY	NO. SEMI-TRUCKS			HOUSEHOLD				
	NO. LARGE TRUCKS			WHITE GOODS				
	NO. PICKUPS			INERT INDUSTRIAL				
	NO. CARS			DEAD ANIMALS				
				TIRES				
				CLASS IV				
OTHER	NO. SEMI-TRUCKS			HOUSEHOLD				
(FED. LANDS/STATE LANDS)	NO. LARGE TRUCKS			WHITE GOODS				
	NO. PICKUPS			INERT INDUSTRIAL				
	NO. CARS			DEAD ANIMALS				
				TIRES				
				CLASS IV				
				TOTALS:				

Appendix E

DRILL HOLE LOG
DRILL HOLE NO.: MW-1

PROJECT: Sevier County Landfill
CLIENT/OWNER: Sevier County
HOLE LOCATION: Sage Flat
DRILLER: Overland Drilling Co.
DRILL RIG: CME 750
DEPTH TO WATER: 92.02' HOLE DIAMETER: 7.75"

PROJECT NO.: 1687-003
DATE: 1/4/93
TOC ELEV.:
GS ELEV.: 5751'
LOGGED BY: DH
HOLE NO.: MW-1

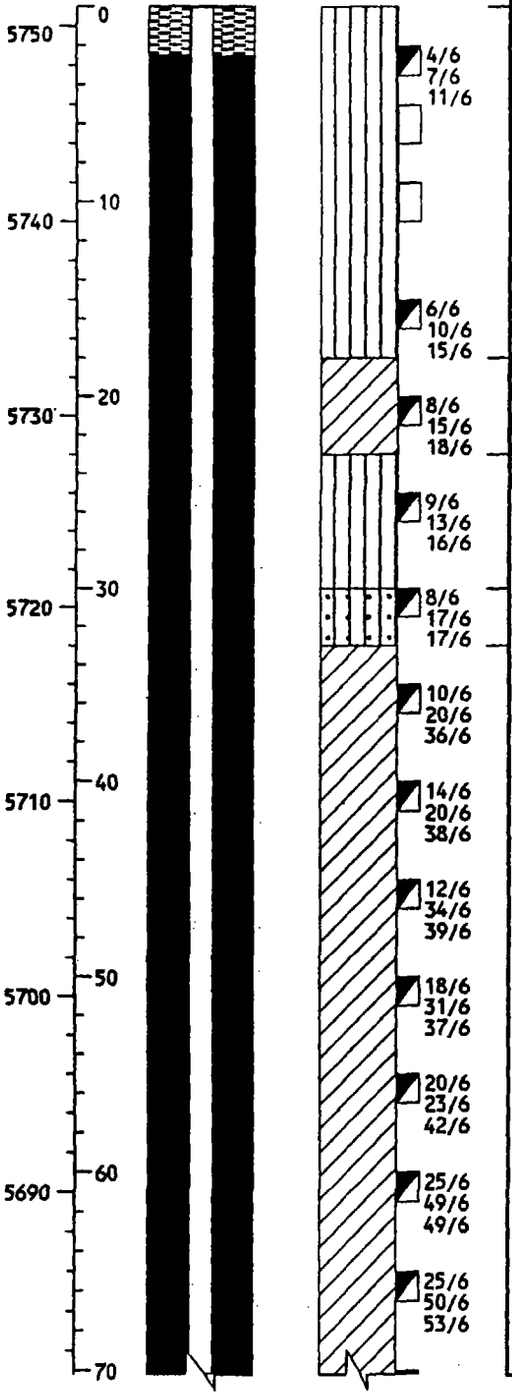

ELEVATION / DEPTH	WELL DETAILS	SOIL SYMBOLS, SAMPLER SYMBOLS AND FIELD TEST DATA	USCS	Description	Sample Number	Sample Depth (ft)	Recovery (in/in)
			ML	SANDY SILT: Brown, fine to medium, stiff, moist.	B-1	2-3.5	4/18
					S-2	5-7	24/24
					S-3	9-11	24/24
					B-4	15-16.5	8/18
			CL	SILTY CLAY: Brown, slightly sandy, fine to medium, occasional weathered gravels, very stiff, slightly moist.	B-5	20-21.5	7/18
			ML	SANDY SILT: Brown, fine to medium, very stiff, slightly moist.	B-6	26-26.5	10/18
			SM	SILTY SAND: Brown, fine to medium, medium dense, slightly moist.	B-7	30-31.5	10/18
			CL	SILTY CLAY: Brown, slightly sandy, fine, very stiff to hard, occasional gypsum, slightly moist.	B-8	36-36.5	10/18
					B-9	40-41.5	9/18
					B-10	45-46.5	10/18
					B-11	50-51.5	8/18
				... grades to greenish gray.	B-12	55-56.5	11/18
					B-13	60-61.5	12/18
					B-14	65-66.5	10/18

Figure No. 1

DRILL HOLE LOG

DRILL HOLE NO.: MW-1

PROJECT: Sevier County Landfill
CLIENT/OWNER: Sevier County
HOLE LOCATION: Sage Flat
DRILLER: Overland Drilling Co.
DRILL RIG: CME 750
DEPTH TO WATER: 92.02'

HOLE DIAMETER: 7.75"

PROJECT NO.: 1687-003
DATE: 1/4/93
TOC ELEV.:
GS ELEV.: 5751'
LOGGED BY: DH
HOLE NO.: MW-1

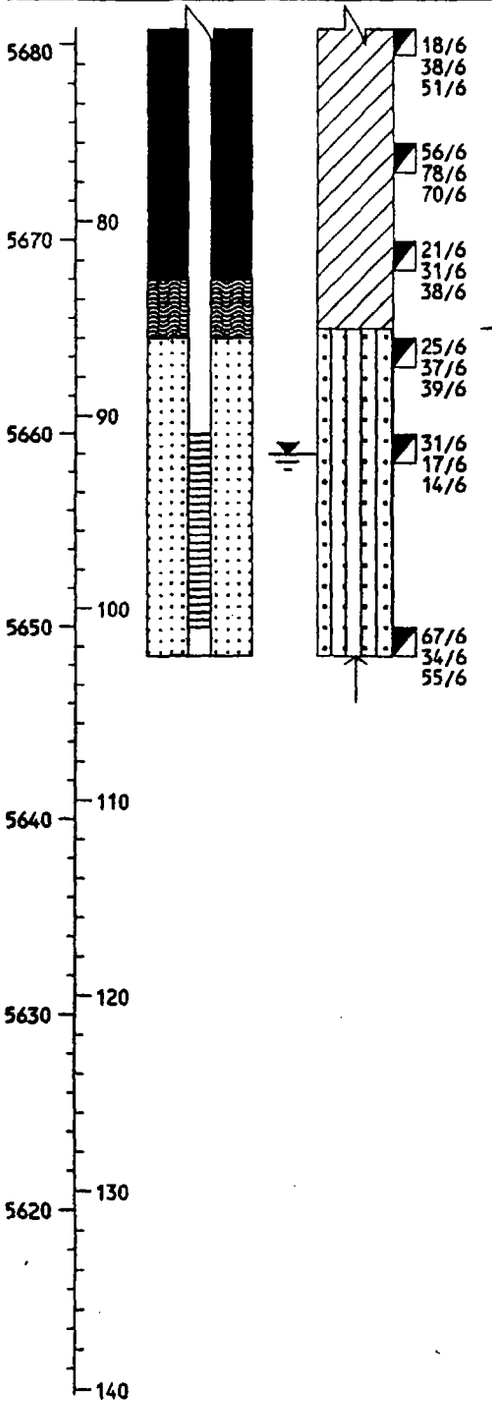

ELEVATION / DEPTH	WELL DETAILS	SOIL SYMBOLS, SAMPLER SYMBOLS AND FIELD TEST DATA	USCS	Description	Sample Number	Sample Depth (ft)	Recovery (in/in)
					B-15	70-71.5	14/18
					B-16	76-77.5	18/18
					B-17	81-82.5	14/18
			SM	SILTY SAND: Brown, fine to coarse, gravely, with occasional clay lenses, dense, moist.	B-18	86-87.5	6/18
				... grades wet.	B-19	91-92.5	18/18
					B-20	101-102.5	18/18

Figure No. 2

BINGHAM ENVIRONMENTAL

DRILL HOLE LOG
DRILL HOLE NO.: MW-2

PROJECT: Sevier County Landfill
CLIENT/OWNER: Sevier County
HOLE LOCATION: Sage Flat
DRILLER: Layne Environmental Services, Inc.
DRILL RIG: AP-1000
DEPTH TO WATER: 165.01' HOLE DIAMETER: 10"

PROJECT NO.: 1687-003
DATE: 8-23-93
TOC ELEV.:
GS ELEV.: 5824'
LOGGED BY: DCH
HOLE NO.: MW-2

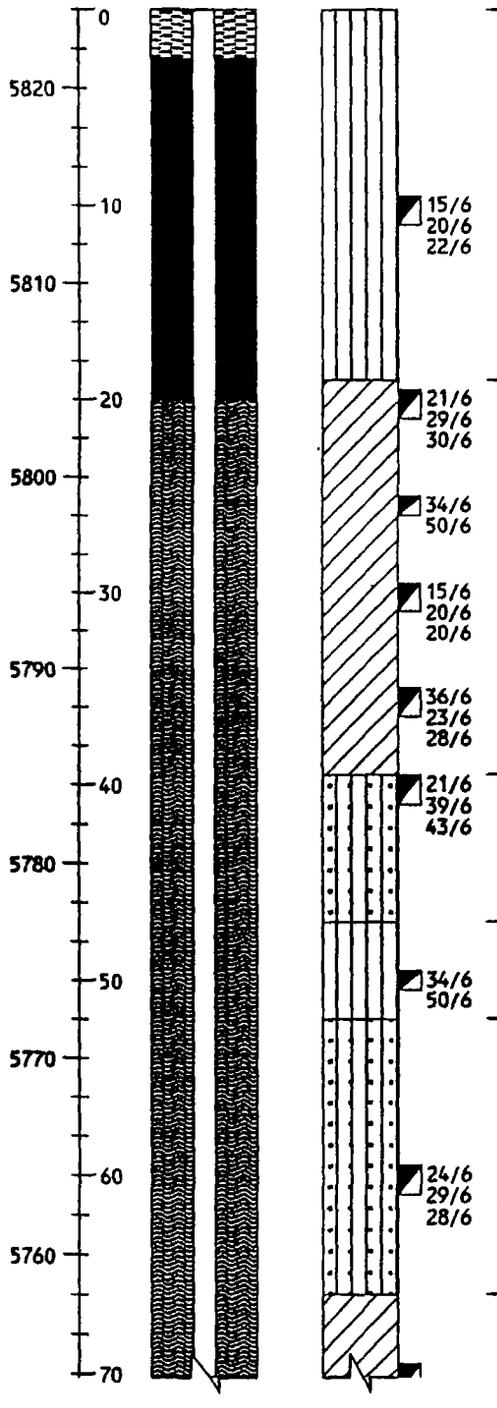

ELEVATION / DEPTH	WELL DETAILS	SOIL SYMBOLS, SAMPLER SYMBOLS AND FIELD TEST DATA	USCS	Description	Sample Number	Sample Depth (ft)	Recovery (in/in)
			ML	SANDY SILT: Brown, fine to coarse sand, occasional fine gravels, very hard, dry.			
				...grades clayey, occasional gypsum.	B-1	9.5-11	16/18
			CL	SILTY CLAY: Brown, slightly sandy with occasional sand and silt lenses, very hard, dry.	B-2	19.5-21	12/18
					B-3	25-26	12/12
					B-4	29.5-31	12/18
					B-5	35-36.5	12/18
			SM	SILTY SAND: Light brown, fine to coarse, occasional gravels (weathered rhyolite) very dense, dry.	B-6	39.5-41	14/18
			ML	SANDY SILT: Light brown, fine to coarse sand, occasional gravel and gypsum, very hard, dry.	B-7	49.5-50.5	12/12
			SM	SILTY SAND: Brown, fine to coarse, very dense, dry.			
				...grades light brown, occasional cobbles.	B-8	59.5-61	16/18
			CL	SILTY CLAY: Brown, slightly sandy, fine to coarse, very hard, dry.			

All gravels and cobbles are rhyolitic.

Figure No. 3

BINGHAM ENVIRONMENTAL

DRILL HOLE LOG

DRILL HOLE NO.: MW-2

PROJECT: Sevier County Landfill
CLIENT/OWNER: Sevier County
HOLE LOCATION: Sage Flat
DRILLER: Layne Environmental Services, Inc.
DRILL RIG: AP-1000
DEPTH TO WATER: 165.01' HOLE DIAMETER: 10"

PROJECT NO.: 1687-003
DATE: 8-23-93
TOC ELEV.:
GS ELEV.: 5824'
LOGGED BY: DCH
HOLE NO.: MW-2

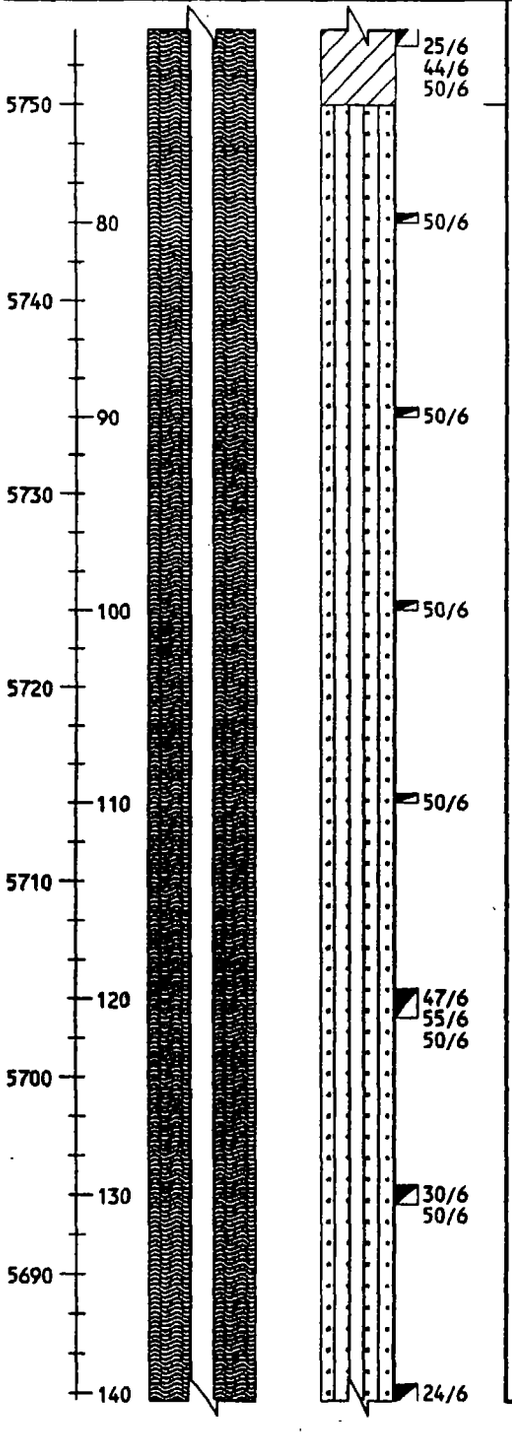

ELEVATION / DEPTH	WELL DETAILS	SOIL SYMBOLS, SAMPLER SYMBOLS AND FIELD TEST DATA	USCS	Description	Sample Number	Sample Depth (ft)	Recovery (in/in)
				...occasional gypsum, slightly moist.	B-9	69.5-71	14/18
			SM	SILTY SAND: Light brown, fine to coarse, very dense, dry. ...grades to occasional gravels with cobbles.			
					B-10	79.5-80	2/6
					B-11	89.5-90	6/6
				...grades to reddish brown.	B-12	99.5-100	1/3
				...grades brown.	B-13	109.5-110	0/2
				...grades moist.	B-14	119.5-121	15/15
					B-15	129.5-130.5	11/11
					B-16	139.5-	12/12

All gravels and cobbles are rhyolitic.

Figure No. 4

DRILL HOLE LOG

DRILL HOLE NO.: MW-2

PROJECT: Sevier County Landfill
CLIENT/OWNER: Sevier County
HOLE LOCATION: Sage Flat
DRILLER: Layne Environmental Services, Inc.
DRILL RIG: AP-1000
DEPTH TO WATER: 165.01' HOLE DIAMETER: 10"

PROJECT NO.: 1687-003
DATE: 8-23-93
TOC ELEV.:
GS ELEV.: 5824'
LOGGED BY: DCH
HOLE NO.: MW-2

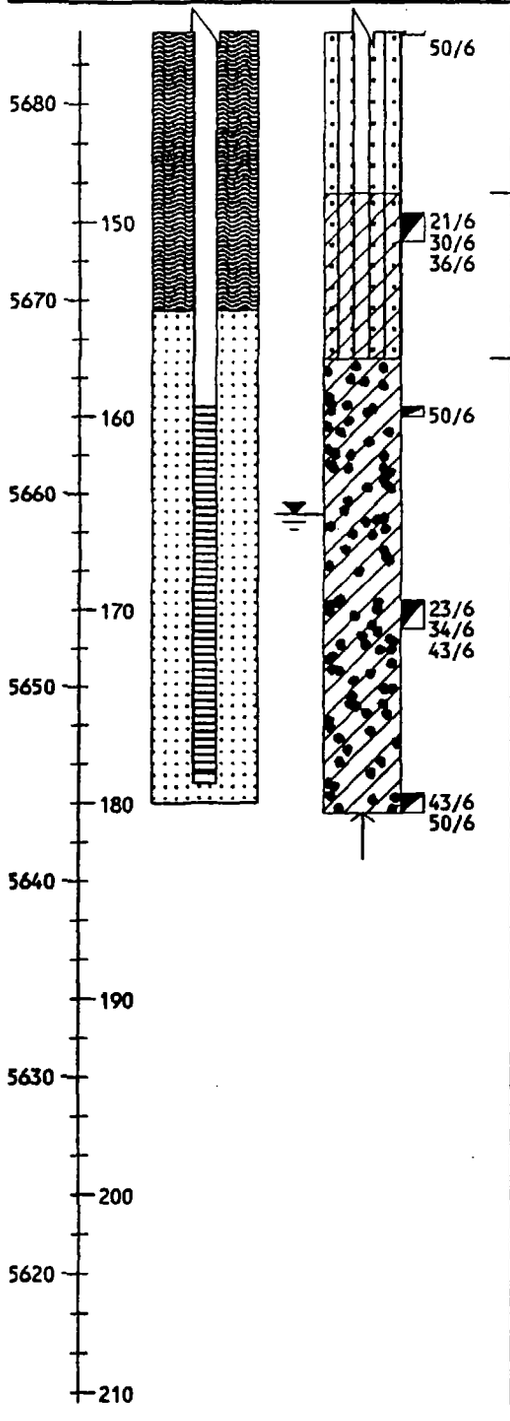

USCS	Description	Sample Number	Sample Depth (ft)	Recovery (in/in)
			140.5	
CL-ML	SILTY CLAY/SANDY SILT: Brown to reddish brown, sandy, fine to coarse, occasional gravel and cobbles, moist.	B-17	149.5-151	12/12
GC	CLAYEY GRAVEL: Brown, sandy, fine to coarse, very dense, moist to wet.	B-18	159.5-160	4/4
	...grades wet.	B-19	169.5-171	18/18
		B-20	179.5-180.5	12/12

All gravels and cobbles are rhyolitic.

Figure No. 5

DRILL HOLE LOG

DRILL HOLE NO.: DH-2

PROJECT: Sevier County Landfill
CLIENT/OWNER: Sevier County
HOLE LOCATION: Sage Flat
DRILLER: Overland Drilling Co.
DRILL RIG: CME 750
DEPTH TO WATER: No water · HOLE DIAMETER: 7.75"

PROJECT NO.: 1687-003
DATE: 1/11/93
TOC ELEV.:
GS ELEV.: 5822'
LOGGED BY: DH
HOLE NO.: DH-2

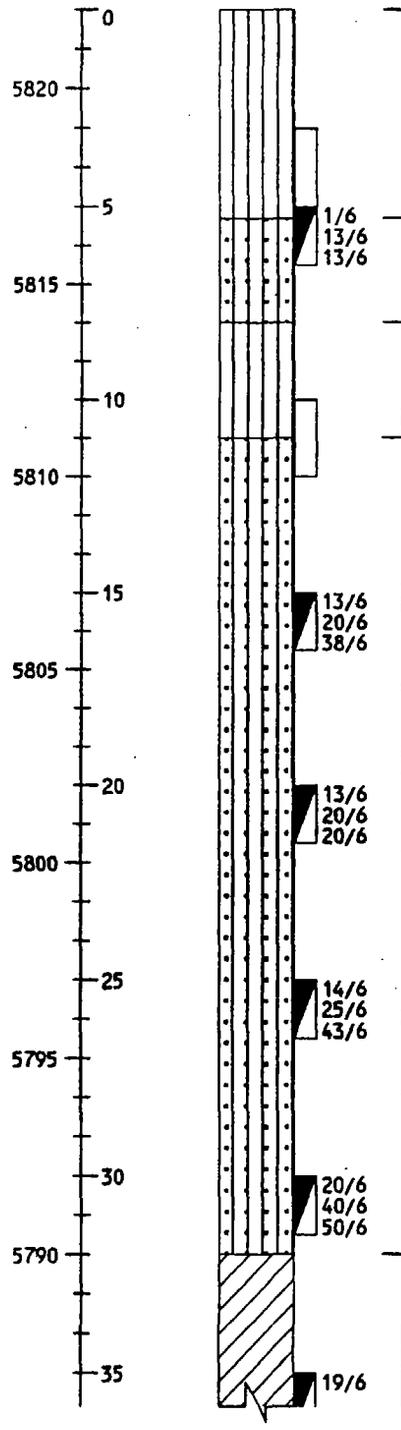

ELEVATION / DEPTH	SOIL SYMBOLS, SAMPLER SYMBOLS AND FIELD TEST DATA	USCS	Description	Sample Number	Sample Depth (ft)	Recovery (in/in)
		ML	SANDY SILT: Brown, fine to medium, roots, clayey, very stiff, moist.	S-1	3-5	24/24
		SM	SILTY SAND: Brown, fine to coarse, occasional rhyolitic gravels, medium dense, slightly moist.	B-2	5-6.5	14/18
		ML	SANDY SILT: Brown, fine medium stiff, slightly moist.	S-3	10-12	23/24
		SM	SILTY SAND: Brown, fine to coarse, occasional weathered gravels, dense to very dense, slightly moist.	B-4	15-16.5	8/18
			...grades with occasional clayey lenses.	B-5	20-21.5	14/18
				B-6	25-26.5	15/18
				B-7	30-31.5	16/18
		CL	SILTY CLAY: Brown, sandy, fine to coarse, occasional weathered rhyolitic gravel, very hard, slightly moist.	B-8	35-36.5	13/18

Figure No. 6

DRILL HOLE LOG

DRILL HOLE NO.: DH-2

PROJECT: Sevier County Landfill
CLIENT/OWNER: Sevier County
HOLE LOCATION: Sage Flat
DRILLER: Overland Drilling Co.
DRILL RIG: CME 750
DEPTH TO WATER: No water HOLE DIAMETER: 7.75"

PROJECT NO.: 1687-00
DATE: 1/11/93
TOC ELEV.:
GS ELEV.: 5822'
LOGGED BY: DH
HOLE NO.: DH-2

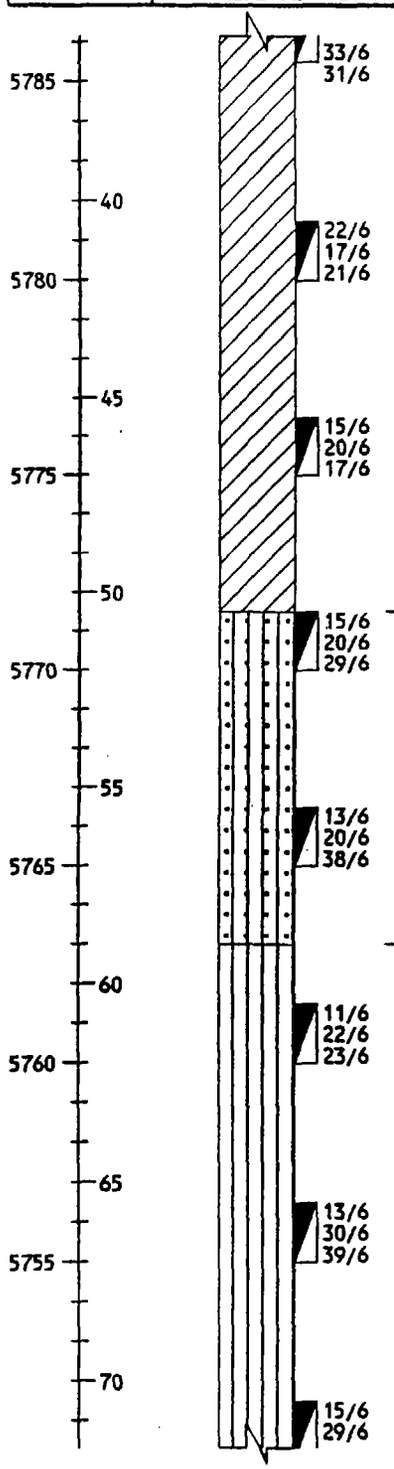

ELEVATION / DEPTH	SOIL SYMBOLS, SAMPLER SYMBOLS AND FIELD TEST DATA	USCS	Description	Sample Number	Sample Depth (ft)	Recovery (in/in)
				B-9	40.5-42	17/18
				B-10	45.5-47	11/18
		SM	SILTY SAND: Brown, fine to medium coarse, very dense, slightly moist.	B-11	50.5-52	12/18
				B-12	55.5-57	13/18
		ML	SANDY SILT: Brown, fine, occasional silty sand lenses, very hard, slightly moist.	B-13	60.5-62	15/18
				B-14	65.5-67	15/18
				B-15	70.5-72	13/18

Figure No. 7

DRILL HOLE LOG

DRILL HOLE NO.: DH-2

PROJECT: Sevier County Landfill
CLIENT/OWNER: Sevier County
HOLE LOCATION: Sage Flat
DRILLER: Overland Drilling Co.
DRILL RIG: CME 750
DEPTH TO WATER: No water
HOLE DIAMETER: 7.75"

PROJECT NO.: 1687-00
DATE: 1/11/93
TOC ELEV.:
GS ELEV.: 5822'
LOGGED BY: DH
HOLE NO.: DH-2

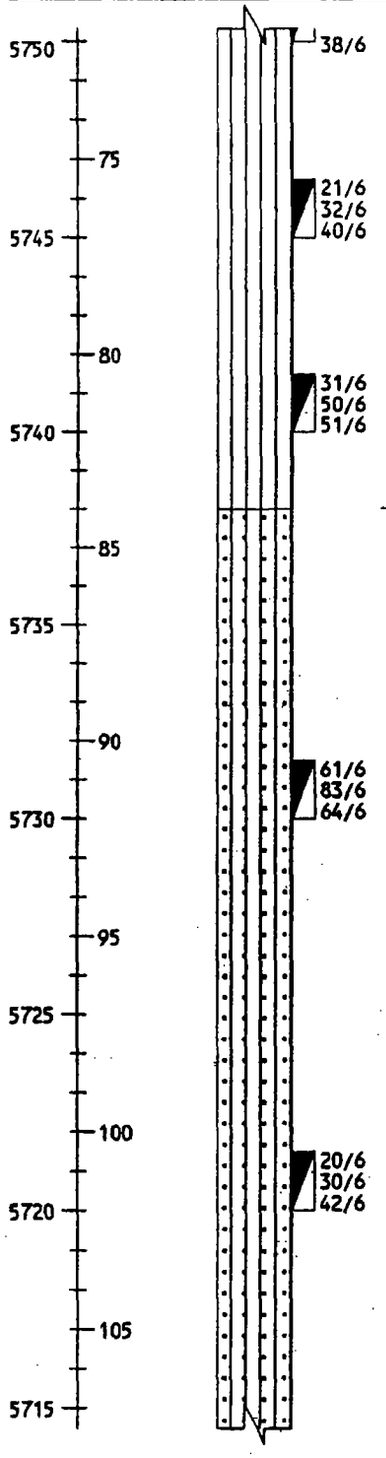

ELEVATION / DEPTH	SOIL SYMBOLS, SAMPLER SYMBOLS AND FIELD TEST DATA	USCS	Description	Sample Number	Sample Depth (ft)	Recovery (in/in)
				B-16	76.5-77	14/18
				B-17	80.5-82	13/18
		SM	SILTY SAND: Brown, fine to coarse, with rhyolitic gravels, very dense, slightly moist.			
				B-18	90.5-92	12/18
				B-19	100.5-102	7/18

Figure No. 8

DRILL HOLE LOG

DRILL HOLE NO.: DH-2

PROJECT: Sevier County Landfill
CLIENT/OWNER: Sevier County
HOLE LOCATION: Sage Flat
DRILLER: Overland Drilling Co.
DRILL RIG: CME 750
DEPTH TO WATER: No water
HOLE DIAMETER: 7.75"

PROJECT NO.: 1687-00
DATE: 1/11/93
TOC ELEV.:
GS ELEV.: 5822'
LOGGED BY: DH
HOLE NO.: DH-2

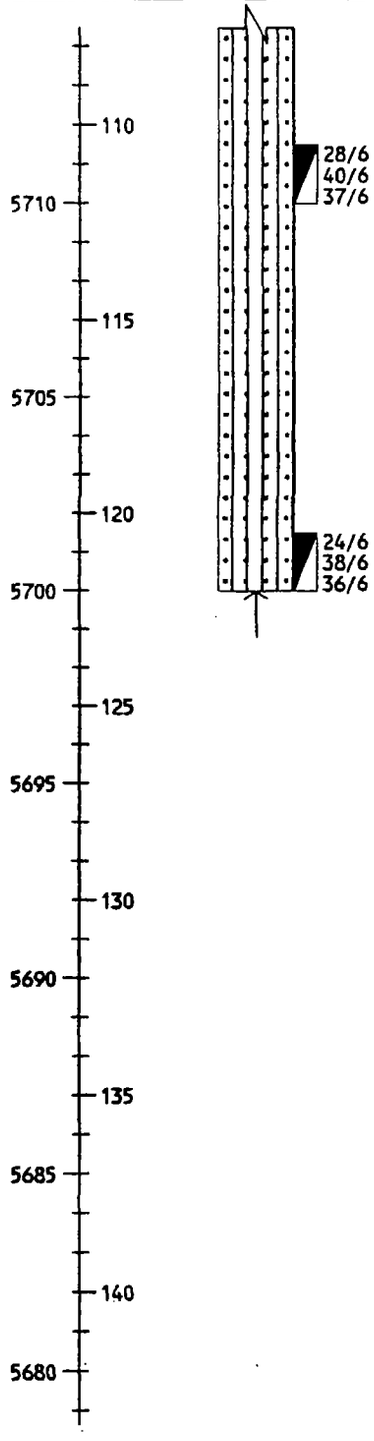

USCS	Description	Sample Number	Sample Depth (ft)	Recovery (in/in)
		B-20	110.5-112	9/18
		B-21	120.5-122	11/18

Figure No. 9

DRILL HOLE LOG

DRILL HOLE NO.: DH-3

PROJECT: Sevier County Landfill
CLIENT/OWNER: Sevier County
HOLE LOCATION: Sage Flat
DRILLER: Overland Drilling Co.
DRILL RIG: CME 750
DEPTH TO WATER: No water HOLE DIAMETER: 7.75"

PROJECT NO.: 1687-003
DATE: 1/6/93
TOC ELEV.:
GS ELEV.: 5752'
LOGGED BY: DH
HOLE NO.: DH-3

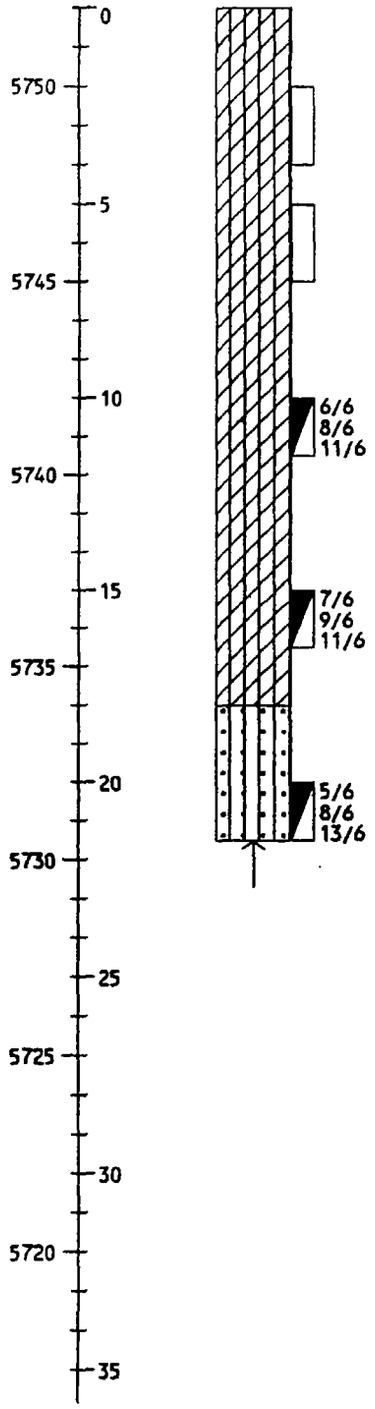

ELEVATION / DEPTH	SOIL SYMBOLS, SAMPLER SYMBOLS AND FIELD TEST DATA	USCS	Description	Sample Number	Sample Depth (ft)	Recovery (in/in)
		CL-ML	SILTY CLAY/CLAYEY SILT: Brown, slightly sandy, fine, stiff, slightly moist to moist.	S-1	2-4	18/24
				S-2	5-7	21/24
				B-3	10-11.5	14/18
				B-4	15-16.5	15/18
		SM	SILTY SAND: Brown, fine to coarse, occasional weathered gravels, medium dense, slightly moist.	B-5	20-21.5	14/18

Figure No. 10

DRILL HOLE LOG

DRILL HOLE NO.: DH-4

PROJECT: Sevier County Landfill
CLIENT/OWNER: Sevier County
HOLE LOCATION: Sage Flat
DRILLER: Overland Drilling Co.
DRILL RIG: CME 750
DEPTH TO WATER: No Water
HOLE DIAMETER: 7.75"

PROJECT NO.: 1687-00
DATE: 1/6/93
TOC ELEV.:
GS ELEV.: 5763'
LOGGED BY: DH
HOLE NO.: DH-4

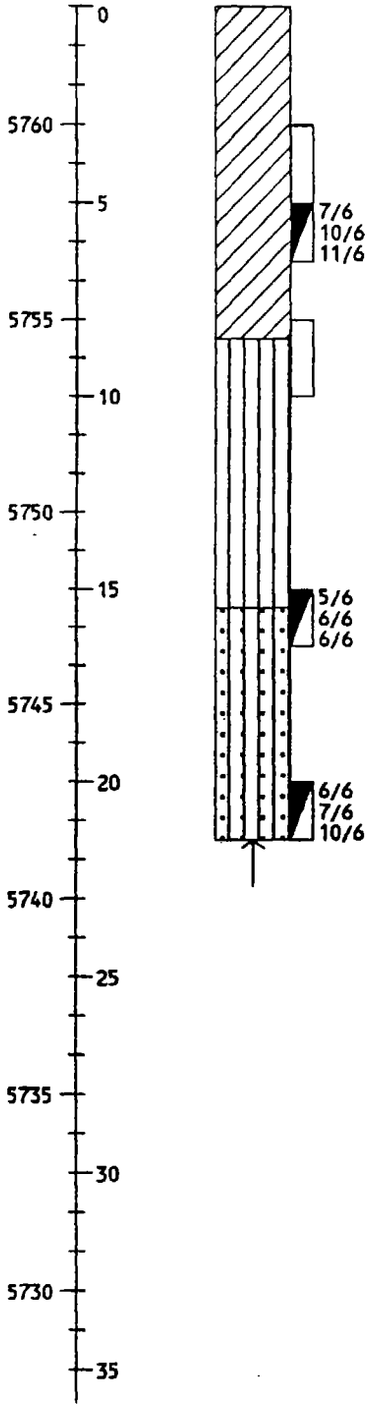

ELEVATION / DEPTH	SOIL SYMBOLS, SAMPLER SYMBOLS AND FIELD TEST DATA	USCS	Description	Sample Number	Sample Depth (ft)	Recovery (in/in)
		CL	SILTY CLAY: Brown, occasional sand lenses, stiff, moist.			
				S-1	3-5	24/24
				B-2	5-6.5	5/18
				S-3	8-10	24/24
		ML	SANDY SILT: Brown, fine, dense, slightly moist.			
				B-4	15-16.5	15/18
		SM	SILTY SAND: Brown, fine to coarse, medium dense, slightly moist.			
				B-5	20-21.5	18/18

Figure No. 11

DRILL HOLE LOG

DRILL HOLE NO.: DH-5

PROJECT: Sevier County Landfill
CLIENT/OWNER: Sevier County
HOLE LOCATION: Sage Flat
DRILLER: Overland Drilling Co.
DRILL RIG: CME 750
DEPTH TO WATER: No water
HOLE DIAMETER: 7.75"

PROJECT NO.: 1687-003
DATE: 1/13/93
TOC ELEV.:
GS ELEV.: 5822'
LOGGED BY: DH
HOLE NO.: DH-5

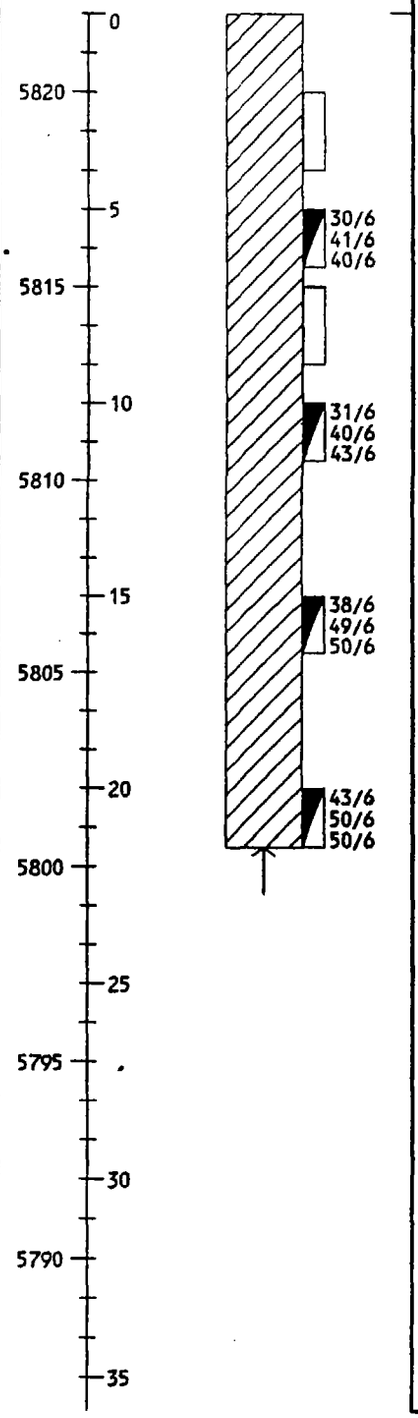

ELEVATION / DEPTH	USCS	Description	Sample Number	Sample Depth (ft)	Recovery (in/in)
	CL	SILTY CLAY: Light brown, roots to 5 ft., sandy, fine, occassional gypsum, hard, slightly moist.	S-1	2-4	24/24
			B-2	5-6.5	6/18
			S-3	7-9	8/24
			B-4	10-11.5	7/18
			B-5	15-16.5	7/18
			B-6	20-21.5	6/18

Figure No. 12

DRILL HOLE LOG

DRILL HOLE NO.: DH-8

PROJECT: Sevier County Landfill
CLIENT/OWNER: Sevier County
HOLE LOCATION: Sage Flat
DRILLER: Overland Drilling Co.
DRILL RIG: CME 750
DEPTH TO WATER: No water
HOLE DIAMETER: 7.75"

PROJECT NO.: 1687-003
DATE: 1/14/93
TOC ELEV.:
GS ELEV.: 5835'
LOGGED BY: DH
HOLE NO.: DH-8

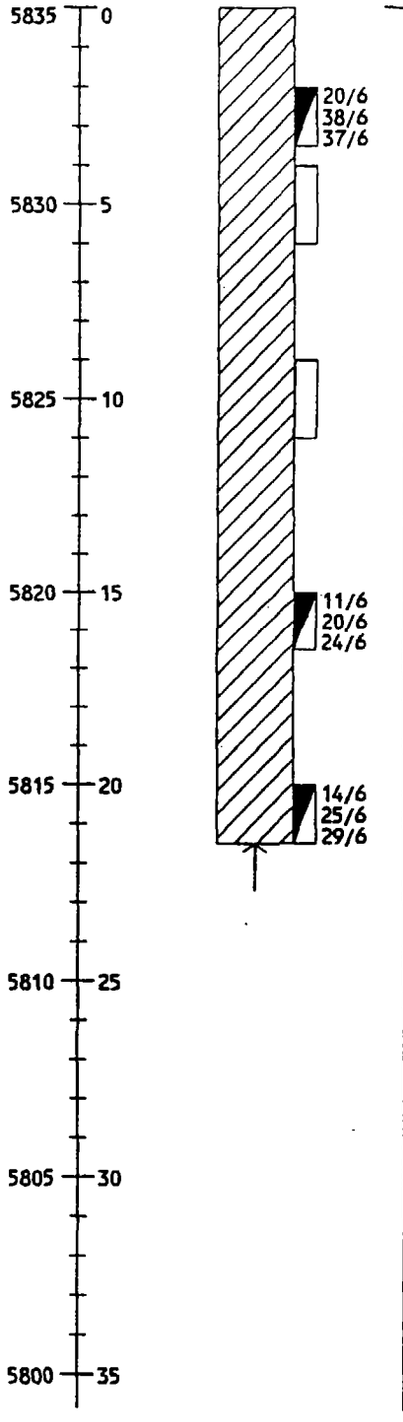

ELEVATION / DEPTH	SOIL SYMBOLS, SAMPLER SYMBOLS AND FIELD TEST DATA	USCS	Description	Sample Number	Sample Depth (ft)	Recovery (in/in)
		CL	SILTY CLAY: Light brown, roots, hard, slightly moist.			
				B-1	2-3.5	8/18
				S-2	4-6	5/24
				S-3	9-11	24/24
			...grades sandy & gravely	B-4	15-16.5	11/18
				B-5	20-21.5	10/18

Figure No. 13

DRILL HOLE LOG

DRILL HOLE NO.: DH-8

PROJECT: Sevier County Landfill
CLIENT/OWNER: Sevier County
HOLE LOCATION: Sage Flat
DRILLER: Overland Drilling Co.
DRILL RIG: CME 750
DEPTH TO WATER: No water HOLE DIAMETER: 7.75"

PROJECT NO.: 1687-003
DATE: 1/14/93
TOC ELEV.:
GS ELEV.: 5835'
LOGGED BY: DH
HOLE NO.: DH-8

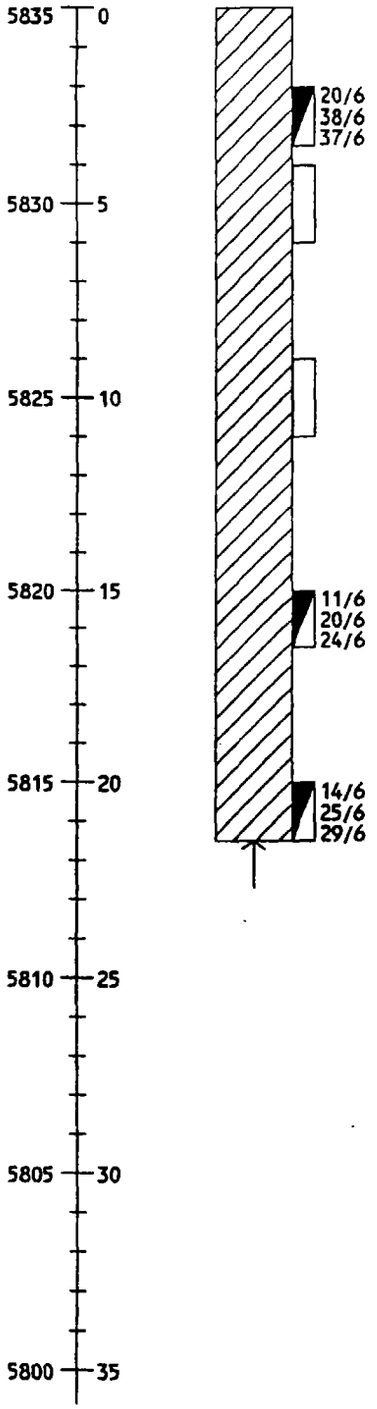

ELEVATION / DEPTH	SOIL SYMBOLS, SAMPLER SYMBOLS AND FIELD TEST DATA	USCS	Description	Sample Number	Sample Depth (ft)	Recovery (in/in)
		CL	SILTY CLAY: Light brown, roots, hard, slightly moist.			
				B-1	2-3.5	8/18
				S-2	4-6	5/24
				S-3	9-11	24/24
			...grades sandy & gravely	B-4	16-16.5	11/18
				B-5	20-21.5	10/18

Figure No. 13

Appendix F

ATTERBERG LIMITS

LIQUID AND PLASTIC LIMITS TEST REPORT

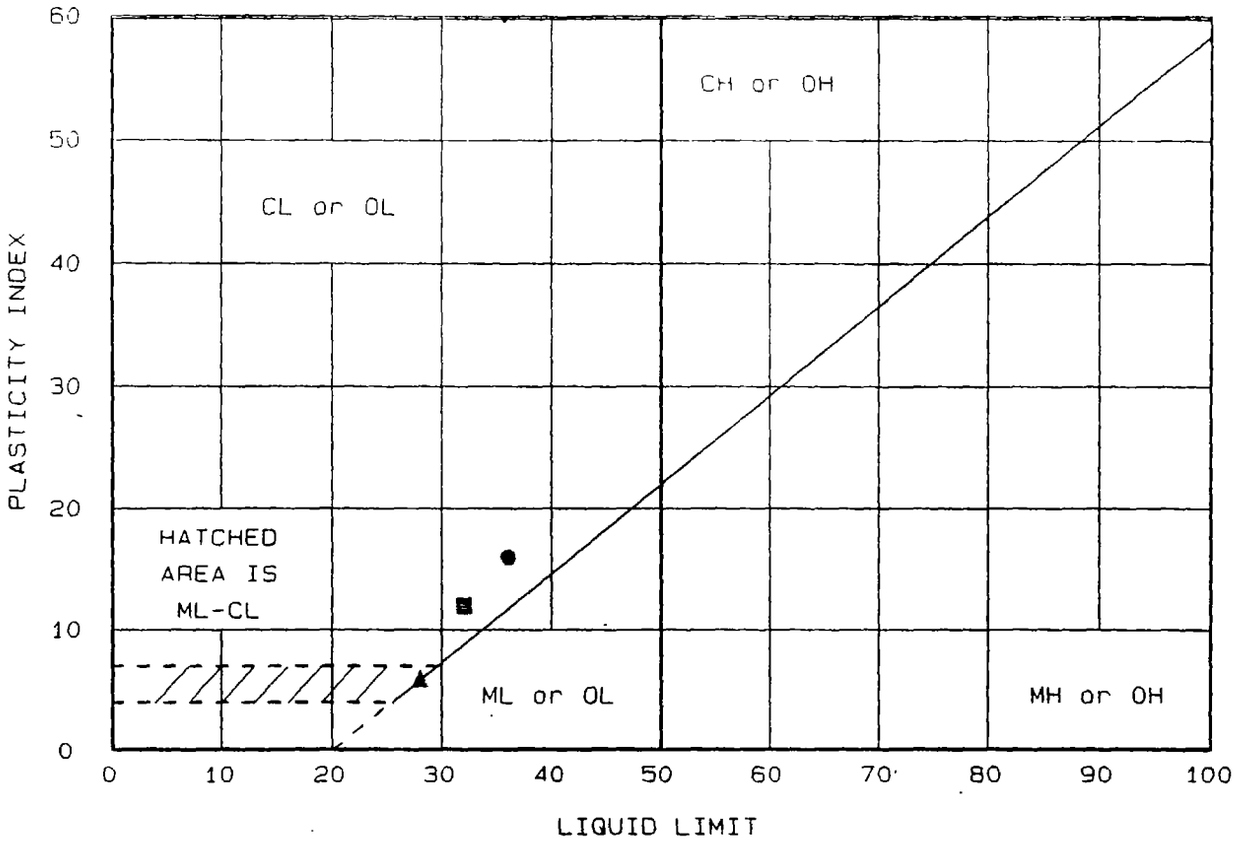

	Location + Description	LL	PL	PI	-200	ASTM D 2487-85
●	DH-1 B-10 Depth 45.0' to 46.5' Brown Clay (CL)	36	20	16		
▲	DH-3 S-2 Depth 5.0' to 7.0' Brown Clayey Silt (CL/ML)	28	22	6		
■	DH-4 B-2 Depth 5.0' to 6.5' Brown Clay (CL)	32	20	12		

Project No.: 1687-002
Project: Solid Waste landfill investigation

Client: Sevier County
Location: Sage Flat

Date: 01-13-93

Remarks:

Tested By: DA

LIQUID AND PLASTIC LIMITS TEST REPORT

Bingham Engineering

Fig. No. _____

LIQUID AND PLASTIC LIMITS TEST REPORT

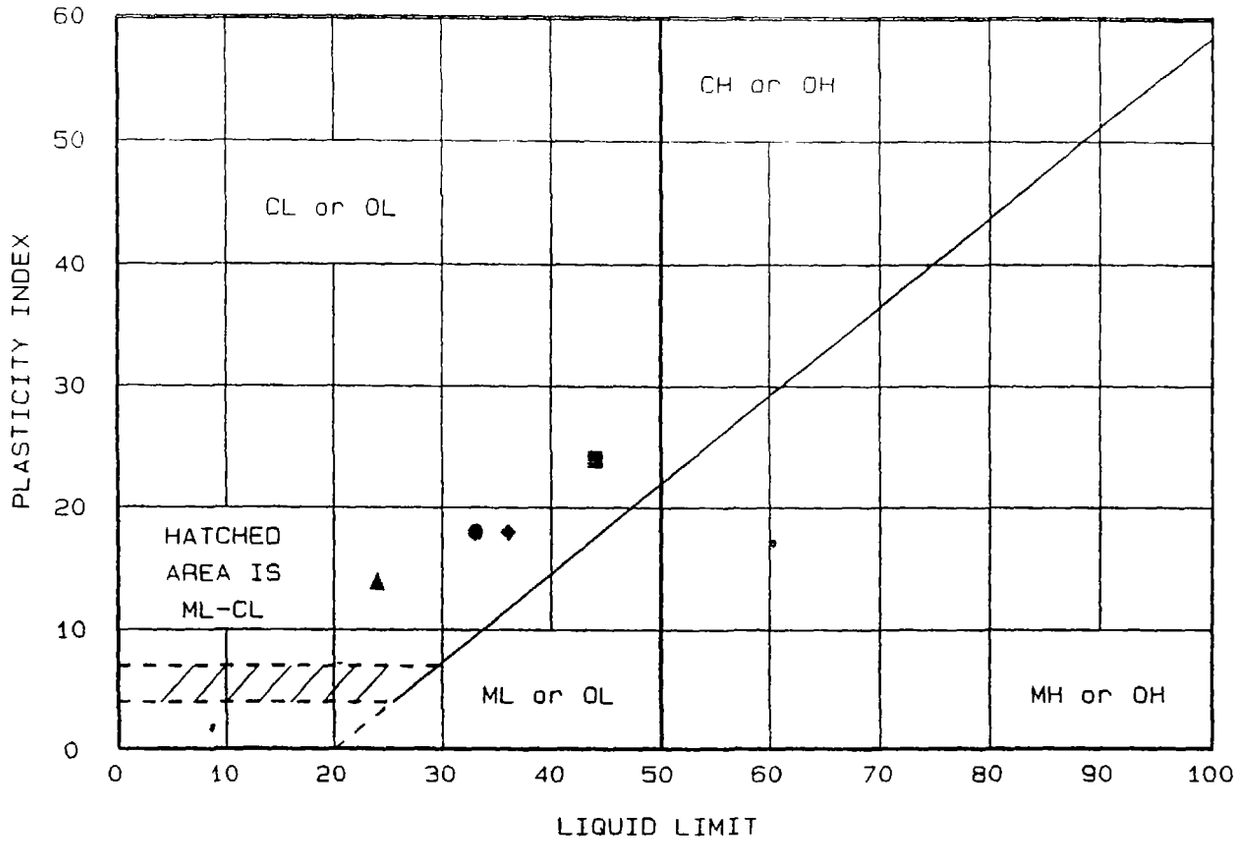

	Location + Description	LL	PL	PI	-200	ASTM D 2487-85
●	DH-2 B-8 Depth 35.0' to 36.5' Brown Clay (CL)	33	15	18		
▲	DH-2 B-12 Depth 55.5' to 57.0' Brown Silty Fine Sand (SM)					
■	DH-5 B-4 Depth 10.0' to 11.5' Brown Clay (CL)	44	20	24		
◆	DH-8 S-3 Depth 9.0' to 11.0' Brown Clay (CL)	36	18	18		

Project No.: 1687-003
Project: Solid Waste landfill Investigation

Client: Sevier County
Location: Sage Flat

Date: 01-21-93

Remarks:

Tested By: DA

LIQUID AND PLASTIC LIMITS TEST REPORT

Bingham Engineering

Fig. No. _____

LIQUID AND PLASTIC LIMITS TEST REPORT

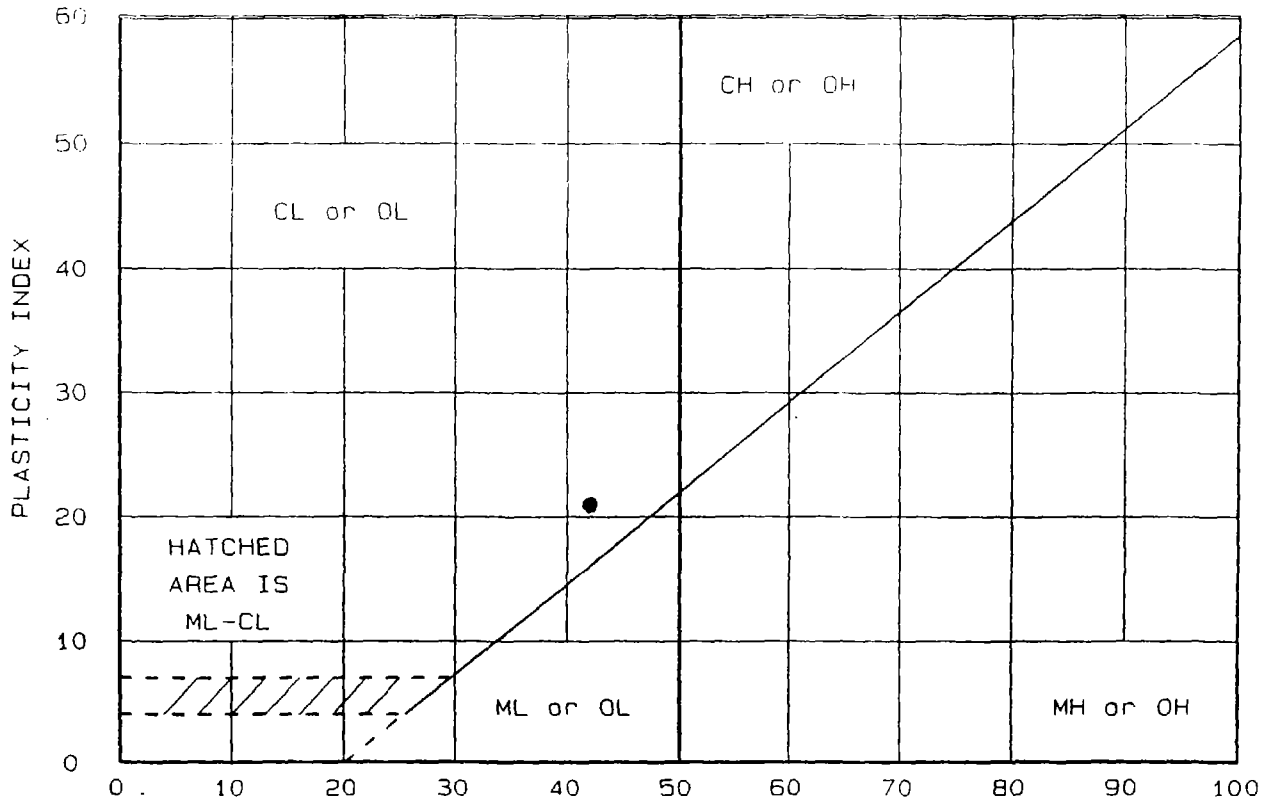

	Location + Description	LL	PL	PI	-200	ASTM D 2487-85
●	OH-5 S-1 Depth: 2.0' to 4.0' Brown Clay	42	21	21		

Project No.: 1687-007
Project: Landfill

Client: Sevier County
Location: Sage Flat

Date: 03-03-93

Remarks:

Tested By: DA

LIQUID AND PLASTIC LIMITS TEST REPORT

Bingham Engineering

Fig. No. _____

GRAIN SIZE ANALYSIS

GRAIN SIZE DISTRIBUTION TEST REPORT

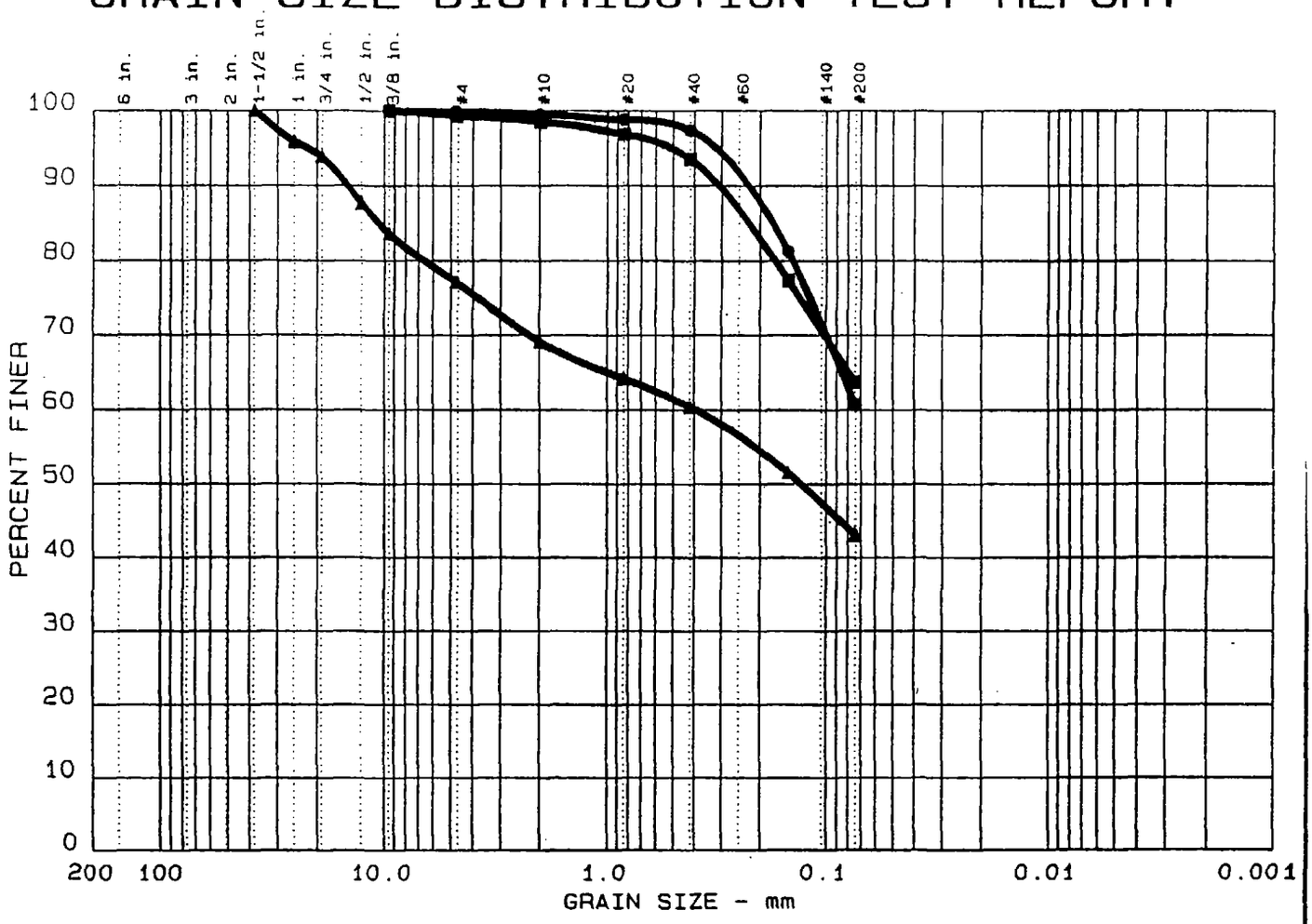

	%+75 mm	% GRAVEL	% SAND	% SILT	% CLAY
●	0.0	0.1	39.2	60.7	
▲	0.0	22.9	34.0	43.1	
■	0.0	0.6	35.7	63.7	

	LL	PI	D_{85}	D_{60}	D_{50}	D_{30}	D_{15}	D_{10}	C_C	C_U
●			0.17							
▲			10.59	0.39	0.13					
■			0.22							

MATERIAL DESCRIPTION	USCS	AASHTO
● Brown Fine Sandy Silt	ML	A-4
▲ Brown Silty Fine Gravely Fine to Course Sand	SM	A-4
■ Brown Fine Sandy Silt	ML	A-4

Project No.: 1687-002
Project: Sevier County Landfill
● Location: MW-1 S-3 Depth 9.0' to 11.0'
▲ Location: DH-3 B-5 Depth 20.0' to 21.5'
■ Location: DH-4 S-3 Depth 8.0' to 10.0'
Date: 01-13-92

Remarks:

Tested By: DA

GRAIN SIZE DISTRIBUTION TEST REPORT

Bingham Engineering

Figure No.

PROCTOR TEST

PROCTOR TEST REPORT

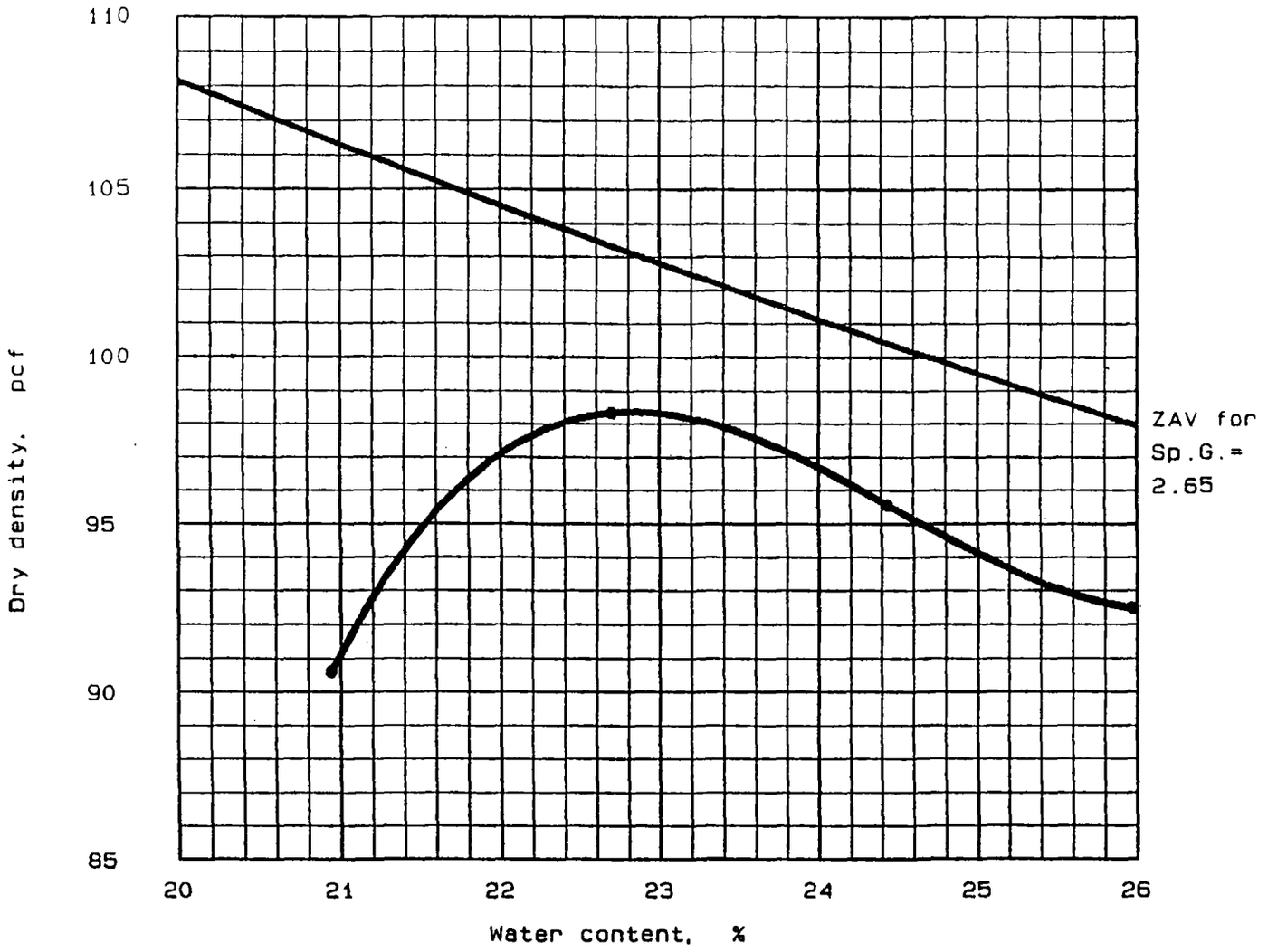

"Standard" Proctor, ASTM D 698, Method C

Elev/ Depth	Classification		Nat. Moist.	Sp.G.	LL	PI	% > No.4	% < No.200
	USCS	AASHTO						
	CL				42	21		

TEST RESULTS	MATERIAL DESCRIPTION
Optimum moisture = 22.8 % Maximum dry density = 98.4 pcf	Gray Clay

Project No.: 1687-004

Project: Sevier County Landfill

Location: DH-5 B-1 and 2 Depth 0.0' to 10.0'

Date: 03-10-93

Remarks:

Tested By: Da

PROCTOR TEST REPORT

Bingham Engineering

Figure No. _____

PROCTOR TEST REPORT

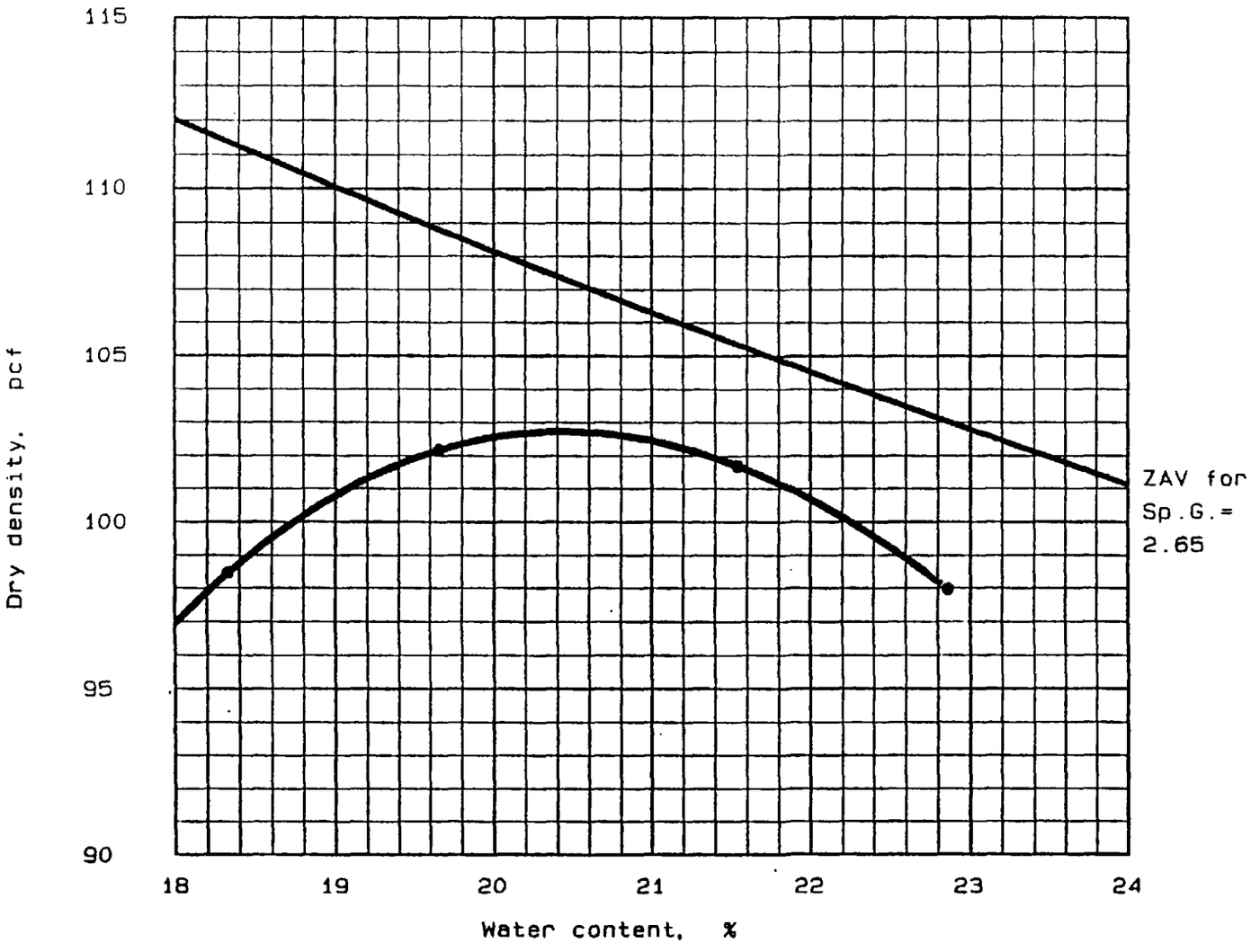

"Standard" Proctor, ASTM D 698, Method C

Elev/ Depth	Classification		Nat. Moist.	Sp.G.	LL	PI	% > No.4	% < No.200
	USCS	AASHTO						
	CL							

TEST RESULTS	MATERIAL DESCRIPTION
Optimum moisture = 20.4 % Maximum dry density = 102.7 pcf	Gray Clay

Project No.: 1687-004

Project: Sevier County Landfill

Location: DH-8 B-1 and 2 Depth: 0.0' to 10.0'

Date: 03-10-93

Remarks:

Tested By: DA

PROCTOR TEST REPORT

Bingham Engineering

Figure No. _____

PERMEABILITY TESTING

SEVIER COUNTY LANDFILL
PERMEABILTIY TESTING

Sample ID	Depth (feet)	Description	Insitu/ Recompacted	Moisture Content	Dry Density	Permeability (cm/sec)
DH-5 S-3	7-9	Brown Silty Clay	Insitu	NA	NA	2.2E-06
DH-5 S-3	7-9	Brown Silty Clay	Recompacted	25.1 %	93.1	3.7E-08
DH-8 S-3	9-11	Brown Silty Clay	Recompacted	22.9 %	95.9	2.2E-08
Composite *	0-10	Brown Silty Clay	Recompacted	16.2 %	104.5	3.8E-08

* Composite sample from DH-5 & DH-8 at a depth of 0 to 10 feet.

CLAY SOIL CHARACTERISTICS

UNIVERSITY OF UTAH RESEARCH INSTITUTE
UURI
391 CHIPETA WAY, SUITE C
SALT LAKE CITY, UTAH 84108-1295
TELEPHONE 801-524-3422

April 7, 1993

Dave Waite
Bingham Engineering
5160 Wiley Post Way
Salt Lake City, Utah 84116

REPORT

Sample	CEC
1687-004	13.7 m eq/100g

Ruth L. Kroneman
Chemist

Bingham Engineering

Clay Sample from Sevier County Bulk XRD **Sample No.**	Mineralogy, Approx. Wt.% [X] (or) Relative Abundance [ ]																						
	Quartz	Plagioclase	K-Feldspar	Dolomite	Calcite	Gypsum	Goethite		Illite+Mica	Mixed-layer Illite-smectite	Smectite		Amorphous/ Below Detect										
1687-004 Mix DH-8 (9-11') and DH-5 (7-9')	20	14	4	3	35	1	2		2	7	2?		10										Amorphous content may represent poorly crystalline carbonates or clays.

MM = Predominant **M = Major** **m = Minor** **Tr = Trace** **? = Tentative Identification**

SUMMARY OF X-RAY DIFFRACTION ANALYSIS

UNIVERSITY OF UTAH RESEARCH INSTITUTE, EARTH SCIENCE LABORATORY (801) 584-4425

S. Lutz
4-6-93

Appendix G

PROJECT Sevier Landfill
FEATURE HELP Modeling

SHEET NO 1 OF 5
PROJECT NO 1687-005
BY D.E.W. DATE 8-17-93
CK'D DLL DATE 9-9-93

Bingham Engineering SALT LAKE CITY, UTAH 801-532-2520

HELP Modeling

Purpose: Calculate water balance (percolation) for the land fill.

Assume: Soil profile as shown
Use wettest 5 year period on record (Sigurd, 1981-1985)
Input → Soil, Climatological, Design
Use default values in database from Cedar City or Milford where appropriate and conservative
Site located at 38° 50', 111° 55'
Vegetion over site - fair grass
Top soil is a silty loam (SCS hydrologic group C) (Richfield SCS office) ↗
CN for topsoil cover is 81 ("Design of Small Dams", Appendix A)

Input

Soil

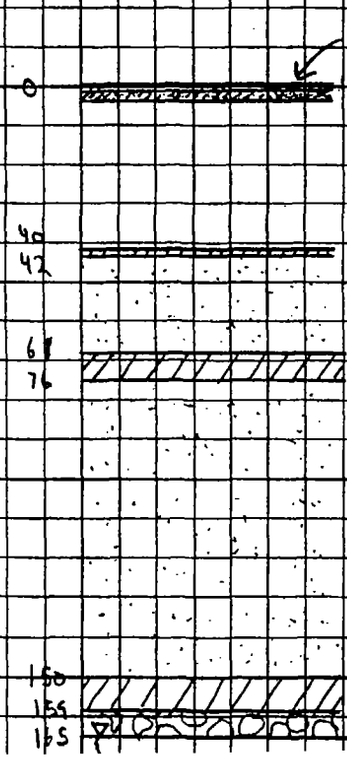

(Assumed Profile)

Bingham Engineering SALT LAKE CITY, UTAH 801-532-2520

Soil (cont.)

Layer	Type	Perm.	Default #		Thickness
1	Top Soil	*	8		6
2	Clay	1E-6	19	(1)	18
3	Waste	*	18		480
4	Silty Clay	*	12		24
5	Silty Sand	*	4		312
6	Silty Clay	*	12		96
7	Silty Sand	*	4		888
8	Silty Clay	*	12		108
9	Gravel	*	1		72

* Default Values - shown on following page

(1) Defined as: porosity = .450
(clay cover) capacity = .370
wilting = .275
conduct. = 1E-6

HELP Default Soil Characteristic Values

DEFAULT, UNVEGETATED, UNCOMPACTED SOIL CHARACTERISTICS

SOIL TEXTURE			DIMENSIONLESS			SAT. HYD.
HELP	USDA	USCS	POROSITY	FIELD CAPACITY	WILTING POINT	CONDUCTIVITY (CM/SEC)
1	CoS	GS	0.417	0.045	0.018	1.0E-02
2	S	SW	0.437	0.062	0.024	5.8E-03
3	FS	SM	0.457	0.083	0.033	3.1E-03
4	LS	SM	0.437	0.105	0.047	1.7E-03
5	LFS	SM	0.457	0.131	0.058	1.0E-03
6	SL	SM	0.453	0.190	0.085	7.2E-04
7	FSL	SM	0.473	0.222	0.104	5.2E-04
8	L	ML	0.463	0.232	0.116	3.7E-04
9	SiL	ML	0.501	0.284	0.135	1.9E-04
10	SCL	SC	0.398	0.244	0.136	1.2E-04
11	CL	CL	0.464	0.310	0.187	6.4E-05
12	SiCL	CL	0.471	0.342	0.210	4.2E-05
13	SC	CH	0.430	0.321	0.221	3.3E-05
14	SiC	CH	0.479	0.371	0.251	2.5E-05
15	C	CH	0.475	0.378	0.265	1.7E-05
16	Liner Soil		0.430	0.366	0.280	1.0E-07
17	Liner Soil		0.400	0.356	0.290	1.0E-08
18	Mun. Waste		0.520	0.294	0.140	2.0E-04
19	USER SPECIFIED SOIL CHARACTERISTICS					
20	USER SPECIFIED SOIL CHARACTERISTICS					

PROJECT Sevier Land fill
FEATURE Precip. Details for HELP

SHEET NO. 3 OF 5
PROJECT NO. 1687-005
BY D.E.W DATE 8-17-93
CK'D DCC DATE 9-9-93

Bingham Engineering SALT LAKE CITY, UTAH 801-532-2520

Climatological

Precipitation

From NOAA Atlas 2 "Precip.-Frequency Atlas of West. U.S.", 1973

25 yr - 24 hr → 2.2" (22 tenths)

(Site @ approx. 38° 50', 111° 55')

Wettest 5 year period → 1981 - 1985 (Sigurd, Utah)

1981	+	9.64
1982	+	11.38
1983	+	12.07
1984	+	10.91
1985	+	10.5
	Avg. =	10.90

Avg. precip. for surrounding cities

Sigurd - 9.50 inches (1980-)
Milford - 9.36 inches (1960?-)
Cedar City - 11.49" (1949-)
Richfield - 8.57" (1928-present)

Sigurd Annual Total Precipitation

Year	Total Precipitation (inches)
1981	9.64
1982	11.38
1983	12.07
1984	10.91
1985	10.51
1986	9.09
1987	6.97
1988	8.09
1989	5.51
1990	8.01
1991	N.G.
1992	9.36

PROJECT Sevier Landfill
FEATURE HELP
Climatological

SHEET NO. 4 OF 5
PROJECT NO. 1687-005
BY D.E.M DATE 8-17-93
CK'D DKL DATE 9.9.93

Bingham Engineering SALT LAKE CITY, UTAH 801-532-2520

Temperature Data

	Max	Avg Min	Mean	Avg Yearly Precip.	
Sigurd	63.9	33.5	48.7	9.50"	1980 - Present
Milford	64.9	32.7	48.8	9.36"	
Cedar City	64.8	36.2	50.5	11.49"	1949 - Present

(From Usu Climate Center, Phone Convers. 8-6-93)

Average Monthly Values (Sigurd 1982 - 1985)

(Missing part of 1981)

Jan	24.2
Feb.	28.9
Mar.	38.7
Apr.	45.0
May	56.7
June	64.9
July	71.8
Aug.	71.5
Sept	61.2
Oct	47.4
Nov	35.9
Dec	26.6

Avg. = 47.7° * (Sigurd, 1980 - Present Avg. = 48.7°)

* Use 47.7° for input into HELP. This will be conservative, as the temperature is used to calculate evaporation rates. The cooler the temperature, the lower the evaporation rate.

PROJECT Sevier Landfill
FEATURE HELP
Cross Section

SHEET NO 5 OF 5
PROJECT NO 1687-005
BY D.F.W. DATE 9-2-93
CK'D DKC DATE 9-9-93

Bingham Engineering SALT LAKE CITY, UTAH 801-532-2520

Cell Details

Plan area → 150 x 1500' (largest cell)
2:1 side slopes (Vertical to Horizontal)

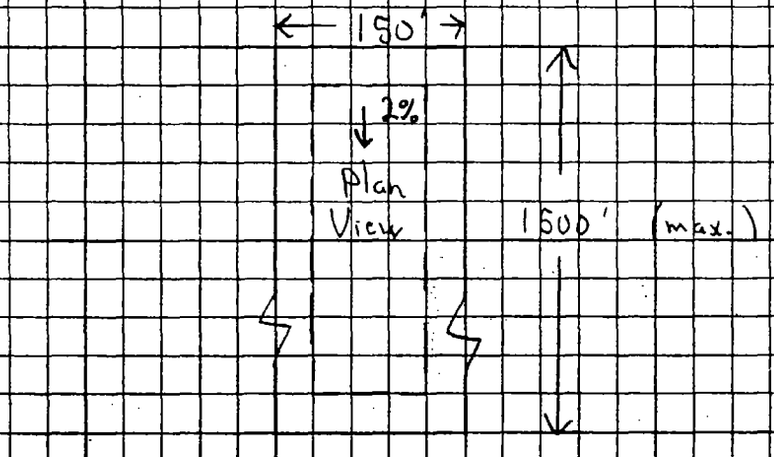

Maximum Section

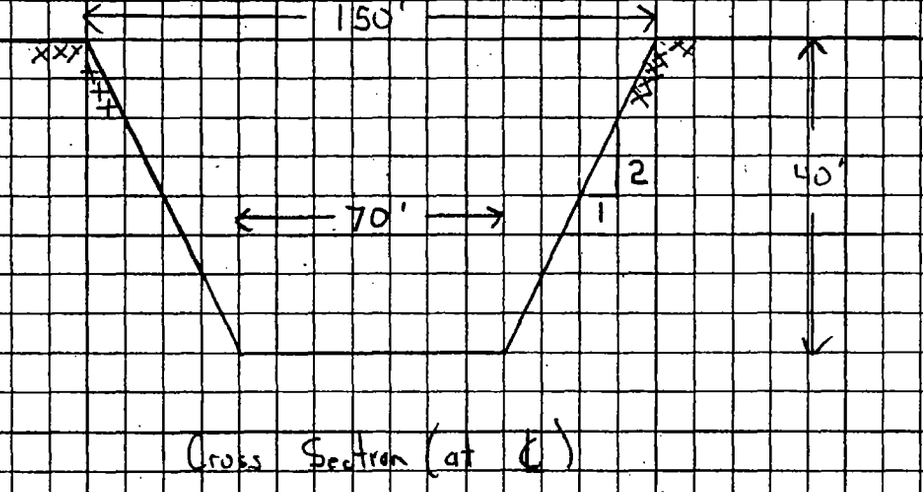

Cross Section (at ℄)

HELP MODEL OUTPUT

SEVIER LANDFILL
SAGE FLAT, UTAH
9-15

FAIR GRASS

LAYER 1

VERTICAL PERCOLATION LAYER

THICKNESS	=	6.00 INCHES
POROSITY	=	0.4630 VOL/VOL
FIELD CAPACITY	=	0.2320 VOL/VOL
WILTING POINT	=	0.1157 VOL/VOL
INITIAL SOIL WATER CONTENT	=	0.2320 VOL/VOL
SATURATED HYDRAULIC CONDUCTIVITY	=	0.001109999954 CM/SEC

LAYER 2

BARRIER SOIL LINER

THICKNESS	=	18.00 INCHES
POROSITY	=	0.4500 VOL/VOL
FIELD CAPACITY	=	0.3700 VOL/VOL
WILTING POINT	=	0.2750 VOL/VOL
INITIAL SOIL WATER CONTENT	=	0.3700 VOL/VOL
SATURATED HYDRAULIC CONDUCTIVITY	=	0.000001000000 CM/SEC

LAYER 3

VERTICAL PERCOLATION LAYER

THICKNESS	=	480.00 INCHES
POROSITY	=	0.5200 VOL/VOL
FIELD CAPACITY	=	0.2942 VOL/VOL
WILTING POINT	=	0.1400 VOL/VOL
INITIAL SOIL WATER CONTENT	=	0.2000 VOL/VOL
SATURATED HYDRAULIC CONDUCTIVITY	=	0.000199999995 CM/SEC

LAYER 4

BARRIER SOIL LINER

THICKNESS	=	24.00 INCHES
POROSITY	=	0.4710 VOL/VOL
FIELD CAPACITY	=	0.3418 VOL/VOL
WILTING POINT	=	0.2099 VOL/VOL
INITIAL SOIL WATER CONTENT	=	0.3700 VOL/VOL
SATURATED HYDRAULIC CONDUCTIVITY	=	0.000042000000 CM/SEC

LAYER 5

VERTICAL PERCOLATION LAYER
THICKNESS = 312.00 INCHES
POROSITY = 0.4370 VOL/VOL
FIELD CAPACITY = 0.1053 VOL/VOL
WILTING POINT = 0.0466 VOL/VOL
INITIAL SOIL WATER CONTENT = 0.1053 VOL/VOL
SATURATED HYDRAULIC CONDUCTIVITY = 0.001700000023 CM/SEC

LAYER 6

VERTICAL PERCOLATION LAYER
THICKNESS = 96.00 INCHES
POROSITY = 0.4710 VOL/VOL
FIELD CAPACITY = 0.3418 VOL/VOL
WILTING POINT = 0.2099 VOL/VOL
INITIAL SOIL WATER CONTENT = 0.3418 VOL/VOL
SATURATED HYDRAULIC CONDUCTIVITY = 0.000042000000 CM/SEC

LAYER 7

VERTICAL PERCOLATION LAYER
THICKNESS = 888.00 INCHES
POROSITY = 0.4370 VOL/VOL
FIELD CAPACITY = 0.1053 VOL/VOL
WILTING POINT = 0.0466 VOL/VOL
INITIAL SOIL WATER CONTENT = 0.1053 VOL/VOL
SATURATED HYDRAULIC CONDUCTIVITY = 0.001700000023 CM/SEC

LAYER 8

VERTICAL PERCOLATION LAYER
THICKNESS = 108.00 INCHES
POROSITY = 0.4710 VOL/VOL
FIELD CAPACITY = 0.3418 VOL/VOL
WILTING POINT = 0.2099 VOL/VOL
INITIAL SOIL WATER CONTENT = 0.3418 VOL/VOL
SATURATED HYDRAULIC CONDUCTIVITY = 0.000042000000 CM/SEC

LAYER 9

VERTICAL PERCOLATION LAYER
THICKNESS = 72.00 INCHES
POROSITY = 0.4170 VOL/VOL

FIELD CAPACITY = 0.0454 VOL/VOL
WILTING POINT = 0.0200 VOL/VOL
INITIAL SOIL WATER CONTENT = 0.0454 VOL/VOL
SATURATED HYDRAULIC CONDUCTIVITY = 0.009999999776 CM/SEC

GENERAL SIMULATION DATA

SCS RUNOFF CURVE NUMBER = 81.00
TOTAL AREA OF COVER = 225000. SQ FT
EVAPORATIVE ZONE DEPTH = 24.00 INCHES
UPPER LIMIT VEG. STORAGE = 2.7780 INCHES
INITIAL VEG. STORAGE = 1.3920 INCHES
INITIAL SNOW WATER CONTENT = 0.0000 INCHES
INITIAL TOTAL WATER STORAGE IN
SOIL AND WASTE LAYERS = 312.2880 INCHES

SOIL WATER CONTENT INITIALIZED BY USER.

CLIMATOLOGICAL DATA

SYNTHETIC RAINFALL WITH SYNTHETIC DAILY TEMPERATURES AND
SOLAR RADIATION FOR MILFORD UTAH

MAXIMUM LEAF AREA INDEX = 1.50
START OF GROWING SEASON (JULIAN DATE) = 138
END OF GROWING SEASON (JULIAN DATE) = 276

NORMAL MEAN MONTHLY TEMPERATURES, DEGREES FAHRENHEIT

JAN/JUL	FEB/AUG	MAR/SEP	APR/OCT	MAY/NOV	JUN/DEC
24.20	28.90	38.70	45.00	56.70	64.90
71.80	71.50	61.20	47.40	35.90	26.60

****

AVERAGE MONTHLY VALUES IN INCHES FOR YEARS 1 THROUGH 20

	JAN/JUL	FEB/AUG	MAR/SEP	APR/OCT	MAY/NOV	JUN/DEC
PRECIPITATION						
TOTALS	0.36	0.63	0.84	0.48	0.93	0.90
	1.24	0.70	0.92	1.14	0.98	1.34
STD. DEVIATIONS	0.28	0.28	0.35	0.37	0.86	0.64
	1.30	0.46	0.76	1.02	0.74	0.74
RUNOFF						
TOTALS	0.000	0.002	0.000	0.000	0.000	0.000

0.005 0.000 0.003 0.001 0.000 0.000

STD. DEVIATIONS 0.000 0.009 0.000 0.000 0.000 0.001
0.018 0.000 0.010 0.002 0.000 0.000

EVAPOTRANSPIRATION

TOTALS 0.654 0.697 0.689 0.469 0.790 0.931
1.313 0.627 0.539 0.901 0.667 0.669

STD. DEVIATIONS 0.235 0.444 0.405 0.310 0.870 0.634
1.118 0.397 0.516 0.787 0.355 0.303

PERCOLATION FROM LAYER 2

TOTALS 0.2056 0.1080 0.0604 0.0348 0.0910 0.0810
0.0709 0.0027 0.1083 0.2486 0.1657 0.2885

STD. DEVIATIONS 0.2901 0.2705 0.1142 0.0730 0.1204 0.1228
0.1207 0.0119 0.2013 0.2693 0.1931 0.3864

PERCOLATION FROM LAYER 4

TOTALS 0.0000 0.0000 0.0000 0.0000 0.0000 0.0000
0.0000 0.0000 0.0000 0.0000 0.0000 0.0000

STD. DEVIATIONS 0.0000 0.0000 0.0000 0.0000 0.0000 0.0000
0.0000 0.0000 0.0000 0.0000 0.0000 0.0000

PERCOLATION FROM LAYER 9

TOTALS 0.0240 0.0219 0.0241 0.0234 0.0242 0.0235
0.0243 0.0243 0.0235 0.0243 0.0235 0.0242

STD. DEVIATIONS 0.0160 0.0144 0.0158 0.0151 0.0155 0.0150
0.0154 0.0155 0.0150 0.0156 0.0152 0.0158

****

****

AVERAGE ANNUAL TOTALS & (STD. DEVIATIONS) FOR YEARS 1 THROUGH 20

	(INCHES)		(CU. FT.)	PERCENT
PRECIPITATION	10.47	(3.085)	196331.	100.00
RUNOFF	0.011	(0.021)	199.	0.10
EVAPOTRANSPIRATION	8.948	(2.847)	167767.	85.45
PERCOLATION FROM LAYER 2	1.4653	(0.8203)	27474.	13.99
PERCOLATION FROM LAYER 4	0.0000	(0.0000)	0.	0.00
PERCOLATION FROM LAYER 9	0.2851	(0.1794)	5345.	2.72
CHANGE IN WATER STORAGE	1.228	(0.825)	23020.	11.73

****

****

PEAK DAILY VALUES FOR YEARS 1 THROUGH 20

	(INCHES)	(CU. FT.)
PRECIPITATION	1.98	37125.0
RUNOFF	0.081	1522.3
PERCOLATION FROM LAYER 2	0.0445	834.9
HEAD ON LAYER 2	5.8	
PERCOLATION FROM LAYER 4	0.0000	0.0
HEAD ON LAYER 4	0.0	
PERCOLATION FROM LAYER 9	0.0020	37.9
SNOW WATER	1.89	35421.4

MAXIMUM VEG. SOIL WATER (VOL/VOL) 0.4479

MINIMUM VEG. SOIL WATER (VOL/VOL) 0.1037

****

****

FINAL WATER STORAGE AT END OF YEAR 20

LAYER	(INCHES)	(VOL/VOL)
1	1.46	0.2426
2	6.66	0.3700
3	125.31	0.2611
4	8.88	0.3700
5	32.60	0.1045
6	27.73	0.2888
7	98.42	0.1108
8	31.47	0.2914
9	3.43	0.0477

SNOW WATER 0.89

****

****

PROJECT Sevier Landfill SHEET NO. ____ OF ____

FEATURE HELP Model JJECT NO. 1687-005

BY D.E.W DATE 12-14-93

Bingham Engineering SALT LAKE CITY, UTAH 801-532-2520 CK'D ____ DATE ____

Purpose: Perform HELP modeling on Sevier Landfill using input data from 9-93 HELP modeling and modifying input as needed for Run 1 & Run 2.

Run 1

Same as previous except: no drainage layer
no top soil
liner → 5 E-5
18" of lateral drainage bottom of waste
2% slope ↗

18" clay 1E-6

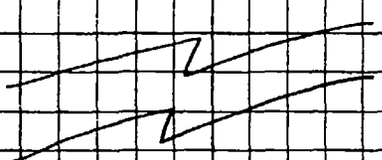

38.5' (462") waste (Vert. Perc.)

18" waste (drainage layer)

24" clay 5E-5

SCS # → 85 Poor Vegetation, Soil Group C

****
****

SEVIER LANDFILL
SAGE FLAT
12-14-93
RUN 1

****
****

LAYER 1

BARRIER SOIL LINER

THICKNESS	=	18.00 INCHES
POROSITY	=	0.4500 VOL/VOL
FIELD CAPACITY	=	0.3700 VOL/VOL
WILTING POINT	=	0.2750 VOL/VOL
INITIAL SOIL WATER CONTENT	=	0.3700 VOL/VOL
SATURATED HYDRAULIC CONDUCTIVITY	=	0.000001000000 CM/SEC

LAYER 2

VERTICAL PERCOLATION LAYER

THICKNESS	=	462.00 INCHES
POROSITY	=	0.5200 VOL/VOL
FIELD CAPACITY	=	0.2942 VOL/VOL
WILTING POINT	=	0.1400 VOL/VOL
INITIAL SOIL WATER CONTENT	=	0.2000 VOL/VOL
SATURATED HYDRAULIC CONDUCTIVITY	=	0.000199999995 CM/SEC

LAYER 3

LATERAL DRAINAGE LAYER

THICKNESS	=	18.00 INCHES
POROSITY	=	0.5200 VOL/VOL
FIELD CAPACITY	=	0.2942 VOL/VOL
WILTING POINT	=	0.1400 VOL/VOL
INITIAL SOIL WATER CONTENT	=	0.2000 VOL/VOL
SATURATED HYDRAULIC CONDUCTIVITY	=	0.000199999995 CM/SEC
SLOPE	=	2.00 PERCENT
DRAINAGE LENGTH	=	75.0 FEET

LAYER 8

VERTICAL PERCOLATION LAYER

THICKNESS	=	108.00 INCHES
POROSITY	=	0.4710 VOL/VOL
FIELD CAPACITY	=	0.3418 VOL/VOL
WILTING POINT	=	0.2099 VOL/VOL
INITIAL SOIL WATER CONTENT	=	0.3418 VOL/VOL
SATURATED HYDRAULIC CONDUCTIVITY	=	0.000042000000 CM/SEC

LAYER 9

VERTICAL PERCOLATION LAYER

THICKNESS	=	72.00 INCHES
POROSITY	=	0.4170 VOL/VOL
FIELD CAPACITY	=	0.0454 VOL/VOL
WILTING POINT	=	0.0200 VOL/VOL
INITIAL SOIL WATER CONTENT	=	0.0454 VOL/VOL
SATURATED HYDRAULIC CONDUCTIVITY	=	0.009999999776 CM/SEC

GENERAL SIMULATION DATA

SCS RUNOFF CURVE NUMBER	=	85.00
TOTAL AREA OF COVER	=	225000. SQ FT
EVAPORATIVE ZONE DEPTH	=	24.00 INCHES
UPPER LIMIT VEG. STORAGE	=	11.2200 INCHES
INITIAL VEG. STORAGE	=	7.8600 INCHES
INITIAL SNOW WATER CONTENT	=	0.0000 INCHES
INITIAL TOTAL WATER STORAGE IN SOIL AND WASTE LAYERS	=	309.9360 INCHES

SOIL WATER CONTENT INITIALIZED BY USER.

CLIMATOLOGICAL DATA

SYNTHETIC RAINFALL WITH SYNTHETIC DAILY TEMPERATURES AND SOLAR RADIATION FOR MILFORD UTAH

MAXIMUM LEAF AREA INDEX	=	1.00
START OF GROWING SEASON (JULIAN DATE)	=	138
END OF GROWING SEASON (JULIAN DATE)	=	276

NORMAL MEAN MONTHLY TEMPERATURES, DEGREES FAHRENHEIT

JAN/JUL	FEB/AUG	MAR/SEP	APR/OCT	MAY/NOV	JUN/DEC
24.20	28.90	38.70	45.00	56.70	64.90
71.80	71.50	61.20	47.40	35.90	26.60

****

AVERAGE MONTHLY VALUES IN INCHES FOR YEARS 1 THROUGH 20

	JAN/JUL	FEB/AUG	MAR/SEP	APR/OCT	MAY/NOV	JUN/DEC
PRECIPITATION						
TOTALS	0.36	0.63	0.84	0.48	0.93	0.90
	1.24	0.70	0.92	1.14	0.98	1.34
STD. DEVIATIONS	0.28	0.28	0.35	0.37	0.86	0.64
	1.30	0.46	0.76	1.02	0.74	0.74
RUNOFF						
TOTALS	0.141	0.163	0.303	0.130	0.499	0.486
	0.690	0.238	0.571	0.760	0.471	0.475
STD. DEVIATIONS	0.269	0.248	0.232	0.190	0.516	0.418
	0.868	0.193	0.575	0.818	0.536	0.421
EVAPOTRANSPIRATION						
TOTALS	0.533	0.573	0.588	0.376	0.428	0.445
	0.547	0.425	0.391	0.363	0.435	0.480
STD. DEVIATIONS	0.248	0.318	0.270	0.199	0.376	0.267
	0.478	0.299	0.270	0.246	0.260	0.244
PERCOLATION FROM LAYER 1						
TOTALS	0.0000	0.0000	0.0000	0.0000	0.0000	0.0000
	0.0000	0.0000	0.0000	0.0000	0.0000	0.0000
STD. DEVIATIONS	0.0000	0.0000	0.0000	0.0000	0.0000	0.0000
	0.0000	0.0000	0.0000	0.0000	0.0000	0.0000

LATERAL DRAINAGE FROM LAYER 3

TOTALS	0.0000	0.0000	0.0000	0.0000	0.0000	0.0000
	0.0000	0.0000	0.0000	0.0000	0.0000	0.0000
STD. DEVIATIONS	0.0000	0.0000	0.0000	0.0000	0.0000	0.0000
	0.0000	0.0000	0.0000	0.0000	0.0000	0.0000

PERCOLATION FROM LAYER 4

TOTALS	0.0240	0.0219	0.0241	0.0234	0.0242	0.0235
	0.0243	0.0243	0.0235	0.0243	0.0235	0.0242
STD. DEVIATIONS	0.0160	0.0144	0.0158	0.0151	0.0155	0.0150
	0.0154	0.0155	0.0150	0.0156	0.0152	0.0158

PERCOLATION FROM LAYER 9

TOTALS	0.0000	0.0000	0.0000	0.0000	0.0000	0.0000
	0.0000	0.0000	0.0000	0.0000	0.0000	0.0000
STD. DEVIATIONS	0.0000	0.0000	0.0000	0.0000	0.0000	0.0000
	0.0000	0.0000	0.0000	0.0000	0.0000	0.0000

****
****

AVERAGE ANNUAL TOTALS & (STD. DEVIATIONS) FOR YEARS 1 THROUGH 20

	(INCHES)	(CU. FT.)	PERCENT
PRECIPITATION	10.47 (3.085)	196331.	100.00
RUNOFF	4.928 (2.096)	92395.	47.06
EVAPOTRANSPIRATION	5.583 (1.503)	104678.	53.32
PERCOLATION FROM LAYER 1	0.0000 (0.0000)	0.	0.00
LATERAL DRAINAGE FROM LAYER 3	0.0000 (0.0000)	0.	0.00
PERCOLATION FROM LAYER 4	0.2851 (0.1794)	5345.	2.72
PERCOLATION FROM LAYER 9	0.0000 (0.0000)	0.	0.00
CHANGE IN WATER STORAGE	-0.325 (1.020)	-6086.	-3.10

****
****

PEAK DAILY VALUES FOR YEARS 1 THROUGH 20

	(INCHES)	(CU. FT.)
PRECIPITATION	1.98	37125.0
RUNOFF	1.671	31330.8
PERCOLATION FROM LAYER 1	0.0000	0.0
HEAD ON LAYER 1	0.0	
LATERAL DRAINAGE FROM LAYER 3	0.0000	0.0
PERCOLATION FROM LAYER 4	0.0020	37.9
HEAD ON LAYER 4	0.0	
PERCOLATION FROM LAYER 9	0.0000	0.0
SNOW WATER	1.89	35446.7
MAXIMUM VEG. SOIL WATER (VOL/VOL)	0.3275	
MINIMUM VEG. SOIL WATER (VOL/VOL)	0.2412	

****

FINAL WATER STORAGE AT END OF YEAR 20

LAYER	(INCHES)	(VOL/VOL)
1	5.18	0.2878
2	91.92	0.1990
3	3.86	0.2144
4	7.92	0.3300
5	32.60	0.1045
6	27.73	0.2888
7	98.42	0.1108
8	31.47	0.2914
9	3.43	0.0477

SNOW WATER 0.91

PROJECT Sevier Landfill
FEATURE HELP Modeling

SHEET NO. ____ OF ____
PROJECT NO. 1687-005
BY D.E.K DATE 12-14-93
CK'D ____ DATE ____

Bingham Engineering SALT LAKE CITY, UTAH 801-532-2520

Run 2

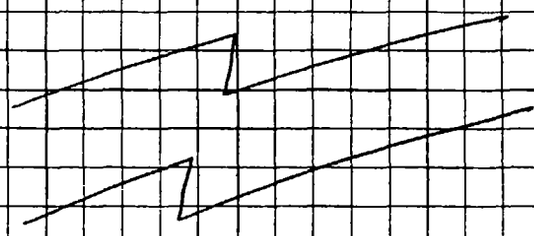

18" Waste

24" Liner

(300" Waste
18" Waste
24" Liner)

****
****

SEVIER LANDFILL
SAGE FLAT
12-14-93
RUN 2

****
****

LAYER 1

VERTICAL PERCOLATION LAYER

THICKNESS	=	300.00 INCHES
POROSITY	=	0.5200 VOL/VOL
FIELD CAPACITY	=	0.2942 VOL/VOL
WILTING POINT	=	0.1400 VOL/VOL
INITIAL SOIL WATER CONTENT	=	0.2000 VOL/VOL
SATURATED HYDRAULIC CONDUCTIVITY	=	0.000199999995 CM/SEC

LAYER 2

LATERAL DRAINAGE LAYER

THICKNESS	=	18.00 INCHES
POROSITY	=	0.5200 VOL/VOL
FIELD CAPACITY	=	0.2942 VOL/VOL
WILTING POINT	=	0.1400 VOL/VOL
INITIAL SOIL WATER CONTENT	=	0.2000 VOL/VOL
SATURATED HYDRAULIC CONDUCTIVITY	=	0.000199999995 CM/SEC
SLOPE	=	2.00 PERCENT
DRAINAGE LENGTH	=	75.0 FEET

LAYER 3

BARRIER SOIL LINER

THICKNESS	=	24.00 INCHES
POROSITY	=	0.4700 VOL/VOL
FIELD CAPACITY	=	0.3300 VOL/VOL
WILTING POINT	=	0.2000 VOL/VOL
INITIAL SOIL WATER CONTENT	=	0.3300 VOL/VOL
SATURATED HYDRAULIC CONDUCTIVITY	=	0.000049999999 CM/SEC

LAYER 4

VERTICAL PERCOLATION LAYER

THICKNESS	=	312.00 INCHES
POROSITY	=	0.4370 VOL/VOL
FIELD CAPACITY	=	0.1053 VOL/VOL
WILTING POINT	=	0.0466 VOL/VOL
INITIAL SOIL WATER CONTENT	=	0.1053 VOL/VOL
SATURATED HYDRAULIC CONDUCTIVITY	=	0.001700000023 CM/SEC

LAYER 5

VERTICAL PERCOLATION LAYER

THICKNESS	=	96.00 INCHES
POROSITY	=	0.4710 VOL/VOL
FIELD CAPACITY	=	0.3418 VOL/VOL
WILTING POINT	=	0.2099 VOL/VOL
INITIAL SOIL WATER CONTENT	=	0.3418 VOL/VOL
SATURATED HYDRAULIC CONDUCTIVITY	=	0.000042000000 CM/SEC

LAYER 6

VERTICAL PERCOLATION LAYER

THICKNESS	=	888.00 INCHES
POROSITY	=	0.4370 VOL/VOL
FIELD CAPACITY	=	0.1053 VOL/VOL
WILTING POINT	=	0.0466 VOL/VOL
INITIAL SOIL WATER CONTENT	=	0.1053 VOL/VOL
SATURATED HYDRAULIC CONDUCTIVITY	=	0.001700000023 CM/SEC

LAYER 7

VERTICAL PERCOLATION LAYER

THICKNESS	=	108.00 INCHES
POROSITY	=	0.4710 VOL/VOL
FIELD CAPACITY	=	0.3418 VOL/VOL
WILTING POINT	=	0.2099 VOL/VOL
INITIAL SOIL WATER CONTENT	=	0.3418 VOL/VOL
SATURATED HYDRAULIC CONDUCTIVITY	=	0.000042000000 CM/SEC

LAYER 8

VERTICAL PERCOLATION LAYER

THICKNESS	=	72.00 INCHES
POROSITY	=	0.4170 VOL/VOL
FIELD CAPACITY	=	0.0454 VOL/VOL
WILTING POINT	=	0.0200 VOL/VOL
INITIAL SOIL WATER CONTENT	=	0.0454 VOL/VOL
SATURATED HYDRAULIC CONDUCTIVITY	=	0.009999999776 CM/SEC

GENERAL SIMULATION DATA

SCS RUNOFF CURVE NUMBER	=	5.00
TOTAL AREA OF COVER	=	18000. SQ FT
EVAPORATIVE ZONE DEPTH	=	16.00 INCHES
UPPER LIMIT VEG. STORAGE	=	8.3200 INCHES
INITIAL VEG. STORAGE	=	3.2000 INCHES
INITIAL SNOW WATER CONTENT	=	0.0000 INCHES
INITIAL TOTAL WATER STORAGE IN SOIL AND WASTE LAYERS	=	270.8760 INCHES

SOIL WATER CONTENT INITIALIZED BY USER.

CLIMATOLOGICAL DATA

SYNTHETIC RAINFALL WITH SYNTHETIC DAILY TEMPERATURES AND SOLAR RADIATION FOR MILFORD UTAH

MAXIMUM LEAF AREA INDEX	= 0.00
START OF GROWING SEASON (JULIAN DATE)	= 138
END OF GROWING SEASON (JULIAN DATE)	= 276

NORMAL MEAN MONTHLY TEMPERATURES, DEGREES FAHRENHEIT

JAN/JUL	FEB/AUG	MAR/SEP	APR/OCT	MAY/NOV	JUN/DEC
24.20	28.90	38.70	45.00	56.70	64.90
71.80	71.50	61.20	47.40	35.90	26.60

****

AVERAGE MONTHLY VALUES IN INCHES FOR YEARS 1 THROUGH 20

	JAN/JUL	FEB/AUG	MAR/SEP	APR/OCT	MAY/NOV	JUN/DEC
PRECIPITATION						
TOTALS	0.36	0.63	0.84	0.48	0.93	0.90
	1.24	0.70	0.92	1.14	0.98	1.34
STD. DEVIATIONS	0.28	0.28	0.35	0.37	0.86	0.64
	1.30	0.46	0.76	1.02	0.74	0.74
RUNOFF						
TOTALS	0.000	0.000	0.000	0.000	0.000	0.000
	0.000	0.000	0.000	0.000	0.000	0.000
STD. DEVIATIONS	0.000	0.000	0.000	0.000	0.000	0.000
	0.000	0.000	0.000	0.000	0.000	0.000
EVAPOTRANSPIRATION						
TOTALS	0.802	0.847	0.937	0.529	1.043	0.832
	1.226	0.681	0.732	1.060	0.814	0.712
STD. DEVIATIONS	0.370	0.510	0.494	0.205	0.861	0.532
	1.136	0.429	0.585	0.857	0.409	0.318
LATERAL DRAINAGE FROM LAYER 2						
TOTALS	0.0000	0.0000	0.0000	0.0000	0.0000	0.0000
	0.0000	0.0000	0.0000	0.0000	0.0000	0.0000
STD. DEVIATIONS	0.0000	0.0000	0.0000	0.0000	0.0000	0.0000
	0.0000	0.0000	0.0000	0.0000	0.0000	0.0000
PERCOLATION FROM LAYER 3						
TOTALS	0.0000	0.0000	0.0000	0.0000	0.0000	0.0000
	0.0000	0.0000	0.0000	0.0000	0.0000	0.0000
STD. DEVIATIONS	0.0000	0.0000	0.0000	0.0000	0.0000	0.0000
	0.0000	0.0000	0.0000	0.0000	0.0000	0.0000
PERCOLATION FROM LAYER 8						
TOTALS	0.0240	0.0219	0.0241	0.0234	0.0242	0.0235

0.0243 0.0243 0.0235 0.0243 0.0235 0.0242

STD. DEVIATIONS 0.0160 0.0144 0.0158 0.0151 0.0155 0.0150
0.0154 0.0155 0.0150 0.0156 0.0152 0.0158

****
****

AVERAGE ANNUAL TOTALS & (STD. DEVIATIONS) FOR YEARS 1 THROUGH 20

	(INCHES)	(CU. FT.)	PERCENT
PRECIPITATION	10.47 (3.085)	15707.	100.00
RUNOFF	0.000 (0.000)	0.	0.00
EVAPOTRANSPIRATION	10.218 (3.298)	15328.	97.59
LATERAL DRAINAGE FROM LAYER 2	0.0000 (0.0000)	0.	0.00
PERCOLATION FROM LAYER 3	0.0000 (0.0000)	0.	0.00
PERCOLATION FROM LAYER 8	0.2851 (0.1794)	428.	2.72
CHANGE IN WATER STORAGE	-0.032 (0.872)	-49.	-0.31

****
****

PEAK DAILY VALUES FOR YEARS 1 THROUGH 20

	(INCHES)	(CU. FT.)
PRECIPITATION	1.98	2970.0
RUNOFF	0.000	0.0
LATERAL DRAINAGE FROM LAYER 2	0.0000	0.0
PERCOLATION FROM LAYER 3	0.0000	0.0
HEAD ON LAYER 3	0.0	
PERCOLATION FROM LAYER 8	0.0020	3.0
SNOW WATER	1.89	2828.3

MAXIMUM VEG. SOIL WATER (VOL/VOL) 0.3383

MINIMUM VEG. SOIL WATER (VOL/VOL) 0.1396

****
****

FINAL WATER STORAGE AT END OF YEAR 20

LAYER	(INCHES)	(VOL/VOL)
1	64.04	0.2135
2	3.74	0.2077
3	7.92	0.3300
4	32.60	0.1045
5	27.73	0.2888
6	98.42	0.1108
7	31.47	0.2914
8	3.43	0.0477

SNOW WATER 0.87

****
****

Appendix H

National Brand
42-380 500 SHEETS FILLER 5 SQUARE
42-381 50 SHEETS EYE-EASE® 5 SQUARE
42-382 100 SHEETS EYE-EASE® 5 SQUARE
42-389 200 SHEETS EYE-EASE® 5 SQUARE
42-392 100 RECYCLED WHITE 5 SQUARE
42-399 200 RECYCLED WHITE 5 SQUARE
Made in U.S.A.

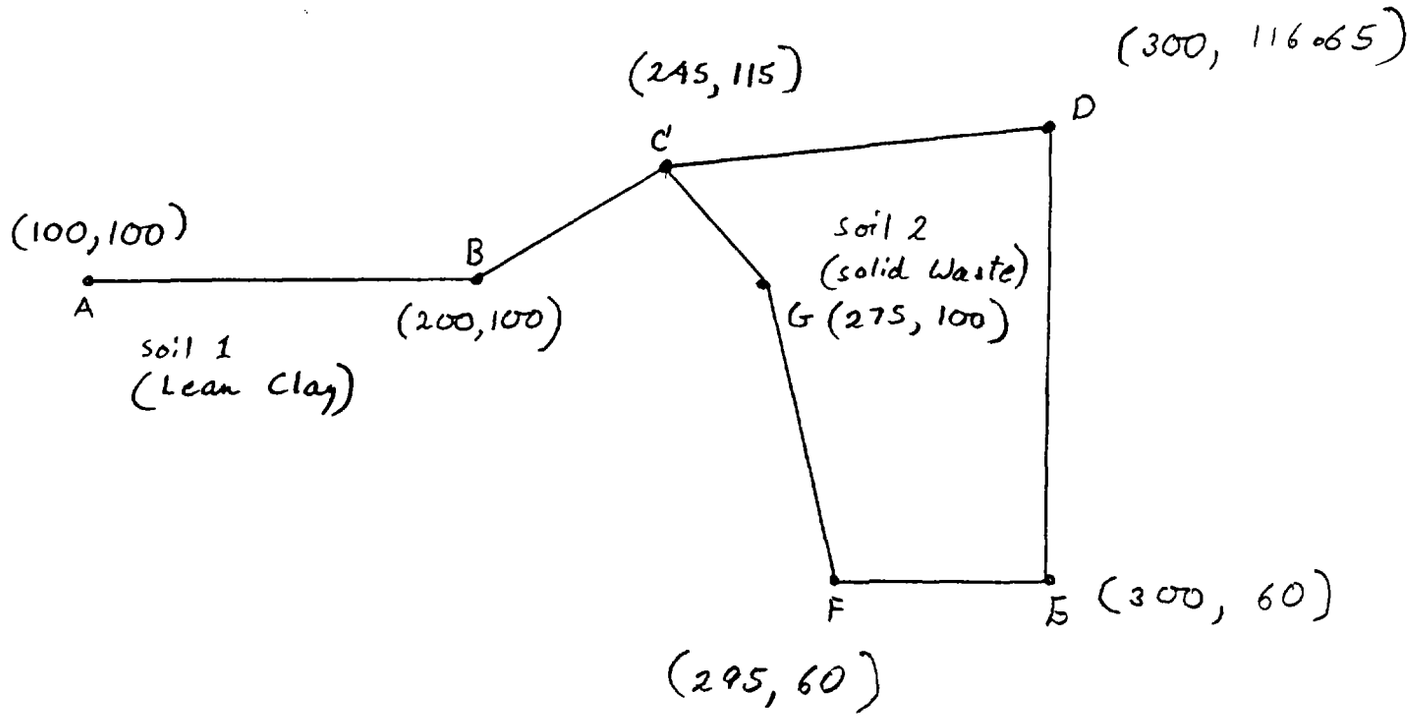

NOT TO SCALE

DRWN BY: SCOTT GOODWIN
DATE: 8-8-97

SEVIER COUNTY SAGE FLAT
LANDFILL - CELL X-SECTION

PROFIL
Sev.in
6 3
100. 100. 200. 100. 1
200. 100. 245. 115. 1
245. 115. 300. 116. 2
245. 115. 275. 100. 1
275. 100. 295. 60. 1
295. 60. 300. 60. 1
SOIL
2
120.0 120.0 2500. 0. 0. 0. 1
37. 37. 500. 0. 0. 0. 1
EQUAKE
.430 .000 .0
CIRCLE
1 2
10 10
101. 200. 200. 300.
0. 10. 0. 0.

** PCSTABL5M **

by
Purdue University

1

--Slope Stability Analysis--
Simplified Janbu, Simplified Bishop
or Spencer`s Method of Slices

Run Date: 8-13-97
Time of Run: 11:00
Run By: SG
Input Data Filename: sev.in
Output Filename: sev.out

PROBLEM DESCRIPTION Sev.in

BOUNDARY COORDINATES

3 Top Boundaries
6 Total Boundaries

Boundary No.	X-Left (ft)	Y-Left (ft)	X-Right (ft)	Y-Right (ft)	Soil Type Below Bnd
1	100.00	100.00	200.00	100.00	1
2	200.00	100.00	245.00	115.00	1
3	245.00	115.00	300.00	116.00	2
4	245.00	115.00	275.00	100.00	1
5	275.00	100.00	295.00	60.00	1
6	295.00	60.00	300.00	60.00	1

1

ISOTROPIC SOIL PARAMETERS

2 Type(s) of Soil

Soil Type No.	Total Unit Wt. (pcf)	Saturated Unit Wt. (pcf)	Cohesion Intercept (psf)	Friction Angle (deg)	Pore Pressure Param.	Pressure Constant (psf)	Piez. Surface No.
1	120.0	120.0	2500.0	.0	.00	.0	1
2	37.0	37.0	500.0	.0	.00	.0	1

A Horizontal Earthquake Loading Coefficient
Of .430 Has Been Assigned

A Vertical Earthquake Loading Coefficient
Of .000 Has Been Assigned

Cavitation Pressure = .0 psf

1

A Critical Failure Surface Searching Method, Using A Random
Technique For Generating Circular Surfaces, Has Been Specified.

Janbus Empirical Coef. is being used for the case of c & phi both > 0
100 Trial Surfaces Have Been Generated.

10 Surfaces Initiate From Each Of 10 Points Equally Spaced
Along The Ground Surface Between X = 101.00 ft.
and X = 200.00 ft.

Each Surface Terminates Between X = 200.00 ft.
and X = 300.00 ft.

Unless Further Limitations Were Imposed, The Minimum Elevation
At Which A Surface Extends Is Y = .00 ft.

10.00 ft. Line Segments Define Each Trial Failure Surface.

1

Following Are Displayed The Ten Most Critical Of The Trial Failure Surfaces Examined. They Are Ordered - Most Critical First.

* * Safety Factors Are Calculated By The Modified Janbu Method * *

Failure Surface Specified By 24 Coordinate Points

Point No.	X-Surf (ft)	Y-Surf (ft)
1	101.00	100.00
2	108.35	93.22
3	116.19	87.01
4	124.48	81.42
5	133.17	76.48
6	142.22	72.21
7	151.56	68.65
8	161.15	65.81
9	170.93	63.70
10	180.83	62.35
11	190.82	61.76
12	200.81	61.93
13	210.77	62.86
14	220.63	64.54
15	230.33	66.97
16	239.81	70.14
17	249.03	74.01
18	257.93	78.58
19	266.45	83.81
20	274.55	89.68
21	282.18	96.15
22	289.29	103.18
23	295.85	110.73
24	299.76	116.00

*** 1.863 ***

Individual data on the 27 slices

Slice No.	Width Ft(m)	Weight Lbs(kg)	Water Force Top Lbs(kg)	Water Force Bot Lbs(kg)	Tie Force Norm Lbs(kg)	Tie Force Tan Lbs(kg)	Earthquake Force Hor Lbs(kg)	Surcharge Load Ver Lbs(kg)
1	7.3	2990.5	.0	.0	.0	1285.9	.0	.0
2	7.8	9304.2	.0	.0	.0	4000.8	.0	.0
3	8.3	15706.4	.0	.0	.0	6753.7	.0	.0
4	8.7	21961.0	.0	.0	.0	9443.3	.0	.0
5	9.0	27845.1	.0	.0	.0	11973.4	.0	.0
6	9.3	33153.8	.0	.0	.0	14256.2	.0	.0
7	9.6	37706.0	.0	.0	.0	16213.6	.0	.0
8	9.8	41348.5	.0	.0	.0	17779.9	.0	.0
9	9.9	43960.3	.0	.0	.0	18902.9	.0	.0
10	10.0	45455.1	.0	.0	.0	19545.7	.0	.0
11	9.2	42062.0	.0	.0	.0	18086.7	.0	.0
12	.8	3735.1	.0	.0	.0	1606.1	.0	.0
13	10.0	47242.7	.0	.0	.0	20314.3	.0	.0
14	9.9	49128.3	.0	.0	.0	21125.2	.0	.0
15	9.7	49743.1	.0	.0	.0	21389.5	.0	.0
16	9.5	49103.8	.0	.0	.0	21114.7	.0	.0
17	5.2	26701.6	.0	.0	.0	11481.7	.0	.0
18	4.0	19909.1	.0	.0	.0	8560.9	.0	.0
19	8.9	38233.8	.0	.0	.0	16440.5	.0	.0
20	8.5	28585.8	.0	.0	.0	12291.9	.0	.0
21	8.1	19024.9	.0	.0	.0	8180.7	.0	.0
22	.5	813.8	.0	.0	.0	349.9	.0	.0
23	3.5	4541.1	.0	.0	.0	1952.7	.0	.0
24	3.7	2872.5	.0	.0	.0	1235.2	.0	.0
25	7.1	4231.7	.0	.0	.0	1819.6	.0	.0
26	6.6	2162.5	.0	.0	.0	929.9	.0	.0
27	3.9	376.3	.0	.0	.0	161.8	.0	.0

Failure Surface Specified By 24 Coordinate Points

Point No.	X-Surf (ft)	Y-Surf (ft)
1	101.00	100.00

2	108.24	93.10
3	116.00	86.80
4	124.24	81.12
5	132.89	76.11
6	141.92	71.81
7	151.25	68.22
8	160.84	65.39
9	170.63	63.32
10	180.54	62.03
11	190.53	61.53
12	200.53	61.81
13	210.47	62.88
14	220.29	64.74
15	229.94	67.36
16	239.36	70.74
17	248.47	74.85
18	257.24	79.66
19	265.59	85.16
20	273.49	91.29
21	280.88	98.03
22	287.71	105.33
23	293.95	113.15
24	295.83	115.92

*** 1.878 ***

1

Failure Surface Specified By 22 Coordinate Points

Point No.	X-Surf (ft)	Y-Surf (ft)
1	112.00	100.00
2	119.36	93.23
3	127.28	87.12
4	135.69	81.71
5	144.53	77.03
6	153.73	73.13
7	163.24	70.03
8	172.98	67.76

9	182.88	66.32
10	192.86	65.74
11	202.86	66.01
12	212.79	67.14
13	222.60	69.11
14	232.19	71.92
15	241.52	75.53
16	250.50	79.93
17	259.07	85.08
18	267.17	90.94
19	274.74	97.48
20	281.72	104.64
21	288.07	112.37
22	290.44	115.83

*** 2.041 ***

Failure Surface Specified By 23 Coordinate Points

Point No.	X-Surf (ft)	Y-Surf (ft)
1	101.00	100.00
2	108.77	93.70
3	116.99	88.01
4	125.62	82.96
5	134.62	78.59
6	143.92	74.92
7	153.47	71.97
8	163.23	69.76
9	173.12	68.30
10	183.09	67.59
11	193.09	67.65
12	203.06	68.48
13	212.93	70.06
14	222.66	72.40
15	232.17	75.46
16	241.43	79.25
17	250.37	83.73
18	258.94	88.88

19	267.09	94.67
20	274.78	101.07
21	281.96	108.03
22	288.58	115.53
23	288.79	115.80

*** 2.110 ***

1

Failure Surface Specified By 22 Coordinate Points

Point No.	X-Surf (ft)	Y-Surf (ft)
1	101.00	100.00
2	108.33	93.19
3	116.22	87.05
4	124.61	81.61
5	133.44	76.93
6	142.65	73.02
7	152.16	69.93
8	161.90	67.68
9	171.80	66.28
10	181.79	65.75
11	191.78	66.08
12	201.71	67.28
13	211.50	69.34
14	221.07	72.24
15	230.35	75.95
16	239.28	80.46
17	247.78	85.73
18	255.79	91.72
19	263.25	98.37
20	270.11	105.65
21	276.30	113.50
22	277.68	115.59

*** 2.121 ***

Failure Surface Specified By 19 Coordinate Points

Point No.	X-Surf (ft)	Y-Surf (ft)
1	145.00	100.00
2	152.13	92.99
3	159.96	86.77
4	168.40	81.41
5	177.36	76.96
6	186.73	73.48
7	196.42	71.00
8	206.32	69.55
9	216.31	69.15
10	226.29	69.81
11	236.14	71.50
12	245.77	74.23
13	255.05	77.94
14	263.89	82.62
15	272.19	88.19
16	279.86	94.61
17	286.81	101.79
18	292.98	109.67
19	296.89	115.94

*** 2.143 ***

1

Failure Surface Specified By 21 Coordinate Points

Point No.	X-Surf (ft)	Y-Surf (ft)
1	112.00	100.00
2	119.29	93.15
3	127.17	87.00
4	135.60	81.62

5	144.49	77.03
6	153.76	73.29
7	163.34	70.43
8	173.15	68.47
9	183.09	67.43
10	193.09	67.31
11	203.06	68.12
12	212.91	69.85
13	222.55	72.49
14	231.91	76.01
15	240.91	80.39
16	249.46	85.58
17	257.49	91.54
18	264.93	98.21
19	271.72	105.55
20	277.80	113.49
21	279.14	115.62

*** 2.167 ***

Failure Surface Specified By 19 Coordinate Points

Point No.	X-Surf (ft)	Y-Surf (ft)
1	145.00	100.00
2	152.23	93.09
3	160.15	86.98
4	168.66	81.73
5	177.67	77.40
6	187.09	74.04
7	196.81	71.68
8	206.72	70.35
9	216.72	70.06
10	226.69	70.82
11	236.52	72.62
12	246.12	75.44
13	255.37	79.25
14	264.17	84.00
15	272.42	89.64

16	280.04	96.12
17	286.93	103.36
18	293.04	111.28
19	295.89	115.93

*** 2.173 ***

1

Failure Surface Specified By 18 Coordinate Points

Point No.	X-Surf (ft)	Y-Surf (ft)
1	145.00	100.00
2	152.07	92.93
3	159.89	86.70
4	168.36	81.38
5	177.38	77.05
6	186.82	73.76
7	196.57	71.55
8	206.51	70.45
9	216.51	70.47
10	226.45	71.62
11	236.19	73.87
12	245.62	77.20
13	254.61	81.57
14	263.06	86.93
15	270.85	93.19
16	277.89	100.30
17	284.09	108.14
18	288.85	115.80

*** 2.236 ***

Failure Surface Specified By 20 Coordinate Points

Point No.	X-Surf (ft)	Y-Surf (ft)
1	112.00	100.00
2	119.11	92.96
3	126.88	86.68
4	135.25	81.21
5	144.13	76.60
6	153.43	72.92
7	163.05	70.18
8	172.89	68.43
9	182.86	67.68
10	192.86	67.94
11	202.78	69.20
12	212.52	71.45
13	221.99	74.67
14	231.09	78.82
15	239.72	83.87
16	247.80	89.76
17	255.25	96.43
18	261.99	103.82
19	267.95	111.85
20	270.09	115.46

*** 2.268 ***

1

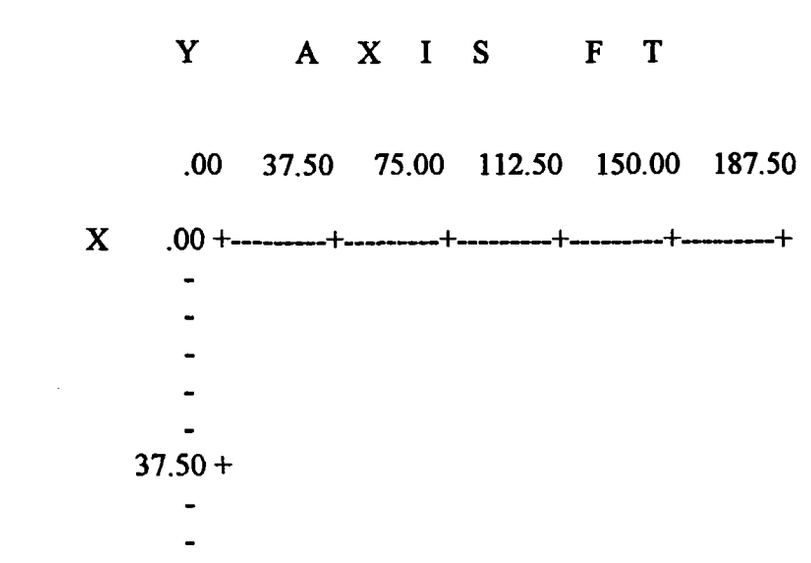

-
-
-
A 75.00 +
-
-
-
-
-
X 112.50 +
-
-
-
-
-
I 150.00 +
-
-
-
-
-
S 187.50 +
-
-
-
-
-
225.00 +
-
-
-
-
-
-
F 262.50 +
-
-
-
-
-
T 300.00 +

Appendix I

Bingham Engineering SALT LAKE CITY, UTAH 801-532-2520

Hydrology

Purpose: Calculate flows from drainage areas around Sevier Landfill using "STORM". Use SCS method.

Given: STORM program (input below)

Input: Area of drainage basin
Time of concentration
Storm precip. (25 yr. - 24 hr.)
SCS curve #
Infiltration rate

Area

A -	3.54 mi^2	
B -	.47 mi^2	
C -	.26 mi^2	
D -	.29 mi^2	
E -	.31 mi^2	(E_1 = .16, E_2 = .15)
F -	1.04 mi^2	
G -	.25	

A–3 may be used to estimate a runoff curve number.

The *CN* for the present hydrologic condition of a forest area is determined as follows: sample plots are located in the area; soil group, litter depth, humus type, and humus depth are determined by means of shallow soil wells dug in the plots; the nomograph, figure A–2(a), gives the hydrologic condition class of the plot; and the network chart, figure A–2(b) gives the *CN*.

TABLE A–3.—*Runoff curve numbers (CN) for hydrologic soil-cover complexes*

I. COMMERCIAL OR NATIONAL FOREST. FOR WATERSHED CONDITION AMC-II AND I_a=0.2S

Hydrologic condition class	Hydrologic soil group			
	A	B	C	D
I. Poorest	56	75	86	91
II. Poor	46	68	78	84
III. Medium	36	60	70	76
IV. Good	26	52	62	69
V. Best	15	44	54	61

(2) *Forest-Range in Western United States.*—In the forest-range regions of the western United States, soil group, cover type, and cover density are the principal factors used in estimating *CN*. Figure A–3 shows the relationship between these factors and *CN* for soil-cover complexes used to date. The figures are based on information in table 2.1, part 2, of the Forest Service "Handbook on Methods of Hydrologic Analysis." The covers are defined as follows:

Herbaceous.—Grass-weed-brush mixtures, with brush the minor element.

Oak-Aspen.—Mountain brush mixtures of oak, aspen, mountain mahogany, bitter brush, maple, and other brush.

Juniper-Grass.—Juniper or pinon with an understory of grass.

Sage-Grass.—Sage with an understory of grass.

The amount of litter is taken into account when estimating the density of cover.

If data pertaining to ground cover density are unavailable, a runoff curve number may be obtained from table A–4.

TABLE A–4.—*Runoff curve numbers (CN) for forest-range areas in western United States (AMC–II)*

Cover	Condition	Soil groups			
		A	B	C	D
Herbaceous	Poor		78	85	92
	Fair		68	81	88
	Good		59	71	84
Sagebrush	Poor		64	78	
	Fair		46	67	72 (assume)
	Good		35	46	
Oak-Aspen	Poor		63	71	
	Fair		40	54	
	Good		30	40	
Juniper	Poor		73	84	
	Fair		54	70	
	Good		40	59	

(d) *Supplementary Information.*—Table A–5 gives *CN* for complexes in a typical watershed in Contra Costa County, California. The *CN* were obtained by the Contra Costa County Flood Control District and the SCS, using streamflow data from the watershed and a trial-and-error process. The range in *CN* for a particular cover and soil group indicates the variation for soil subgroups.

TABLE A–5.—*Runoff curve numbers (CN) for hydrologic soil-cover complexes of a typical watershed in Contra Costa County, California (AMC–II and I_a=0.2S)*

Cover	Condition	Hydrologic soil group			
		A	B	C	D
Scrub (native brush)		25–30	41–46	57–63	66
Grass-oak (native oaks with understory of forbs [1] and annual grasses)	Good	29–33	43–48	59–65	67
Irrigated pasture	Good	32–37	46–51	62–68	70
Orchard (winter period with understory of cover crop)	Good	37–41	50–55	64–69	71
Range (annual grass)	Fair	46–49	57–60	68–72	74
Small grain (contoured)	Good	61–64	69–71	76–80	81
Truck crops (straight-row)	Good	67–69	74–76	80–83	84
Urban areas:					
Low density (15 to 18 percent impervious surfaces)		69–71	75–78	82–84	86
Medium density (21 to 27 percent surfaces)		71–73	77–80	84–86	88
High density (50 to 75 percent impervious surfaces)		73–75	79–82	86–88	90

[1] Forbs are defined as any herb other than grass.

(e) *Determination of Curve Numbers (CN) for Mixed Areas.*—Table A–6 shows the process by which a weighted soil-cover complex number

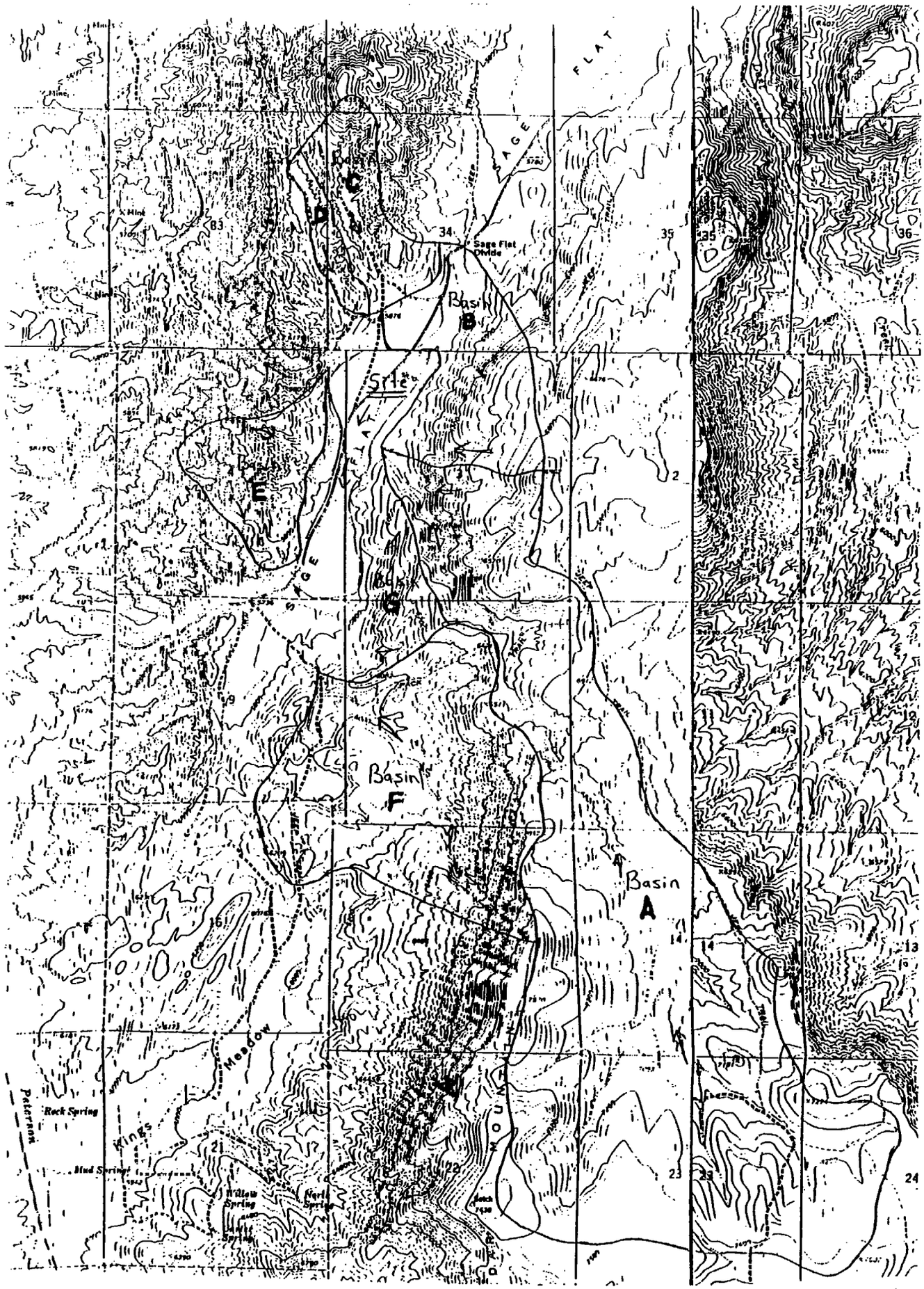

Drainage Basins

PROJECT Sevier Landfill
FEATURE Drainage Structures
Hydrology
Bingham Engineering SALT LAKE CITY, UTAH 801-532-2520

SHEET NO. 7 OF 10
PROJECT NO. 1687-005
BY D.E.W DATE 4-27-94
CK'D DLC DATE 9-9-93

CN (cont.)

Basin C - .3(46) + .2(67) + .5(72) = 63

Basin D - (North Portion) Area = .13 mi²

All D → 72

Basin E - Bad lands (D) 72

Basin F - .5(46) + .1(67) + .4(72) = 59

Basin G - All B 46 (assume B0 to be conservative; no runoff when CN = 46)

PROJECT Sevier Landfill
FEATURE Drainage Structures
Hydrology

SHEET NO. 8 OF 10
PROJECT NO. 1687-005
BY D.E.W. DATE 4-27-94
CK'D DLC DATE 9.9.93

Bingham Engineering SALT LAKE CITY, UTAH 801-532-2520

Time of Concentration (t_c)

Assume: Use U.S. Corp. of Engineers graphs

$$t_p = C\left[\frac{(L * L_c)}{\sqrt{S}}\right]^{.38}$$

$$t_c = 1.667\, t_p$$

Where: t_p = lag time
L = length of stream in miles, outlet to divide
L_c = outlet to area centroid or stream
S = mean slope (feet/mile)
C = coefficient for mountain drainage (1.2) or foothill drainage (0.72)

Basin A → $L = 4.6$
$L_c = 3.0$
$S_{avg} = 1010$ ft/mile

$$t_c = (1.667)(1.2)\left[\frac{(4.6)(3.0)}{\sqrt{1010}}\right]^{.38} = \boxed{1.50 \text{ hrs}}$$

Basin B → $L = .49$
$L_c = .23$
$S = 1400$

$$t_c = 1.667\,(.72)\left[\frac{(.49)(.23)}{\sqrt{1400}}\right]^{.38} = \boxed{.13 \text{ hrs}}$$

Basin C → $L = .91$
$L_c = .44$
$S = 1500$

$$t_c = 1.667\,(1.2)\left[\frac{(.91)(.44)}{\sqrt{1500}}\right]^{.38} = \boxed{.39 \text{ hrs}}$$

PROJECT Sevier Land fill
FEATURE Drainage Structures
Hydrology
SHEET NO. 9 OF 10
PROJECT NO. 087-005
BY D.E.H. DATE 4-27-94
CK'D DLC DATE 9-9-93

Bingham Engineering SALT LAKE CITY, UTAH 801-532-2520

Basin D → L = .78
L_c = .36
S = 620

$$t_c = 1.667(1.2)\left[\frac{(.78)(.36)}{\sqrt{620}}\right]^{.38} = .44 \text{ hrs}$$

Basin E → L = .53
L_c = .36
S = 1100'/mile

$$t_c = 1.667(1.2)\left[\frac{(.53)(.36)}{\sqrt{1100}}\right]^{.38} = .23 \text{ hrs}$$

Basin F → L = 1.52
L_c = .57
S = 900

$$t_c = 1.667(1.2)\left[\frac{(1.52)(.57)}{\sqrt{900}}\right]^{.38} = .52 \text{ hrs}$$

Basin G → L = .4
L_c = .15
S = 1100

$$t_c = 1.667(1.2)\left[\frac{(.4)(.15)}{\sqrt{1100}}\right]^{.38} = .8 \text{ hrs}$$

Summary

Basin	t_c
A	1.50
B	.13
C	.35
D	.44
E	.23
F	.52
G	.18

STORM MODELING

PROJECT Sevier Landfill
FEATURE Drainage structures
Hydrology

SHEET NO. 10 OF 10
PROJECT NO. 1687-005
BY D.E.W. DATE 8-17-93
CK'D DCC DATE 9.9.93

Bingham Engineering SALT LAKE CITY, UTAH 801-532-2520

STORM Assumptions / Results

Assume: SCS Method
25 yr 24-hr precipitation
Sagebrush - Fair Condition

Results:

Basin	Maximum Flow	Area	CN
A	75.3	3.54	65
B_1	.7	.23	56
B_2	2.0	.24	59
C	5.7	.26	63
D	14.8	.13	72
E_1	17.4	.16	72
E_2	16.5	.15	72
F	8.2	.04	59
G	.14	.25	56

(See attached sheets - STORM output)

1

SEVIER LANDFILL - STORM RUNOFF - 25 YEAR, 24 HOUR EVENT (BASIN A)
UNIT HYDROGRAPH

DRAINAGE AREA (SQUARE MILES) 3.540
TIME OF CONCENTRATION (HOURS) 1.500

TIME (HOURS)	DISCHARGE (CFS)
.000	.00
.500	544.78
1.000	1447.77
1.500	1276.11
2.000	644.53
2.500	322.59
3.000	157.99
3.500	93.15
4.000	44.57
4.500	6.48
5.000	.00

TOTAL DISCHARGE = 187.520 ACRE-FEET

1

SEVIER LANDFILL - STORM RUNOFF - 25 YEAR, 24 HOUR EVENT (BASIN A)
STORM HYDROGRAPH RAIN = 2.200 DURATION = 24.0 RUNOFF = .194
STORM DISTRIBUTION IS SCS 24-HR
CURVE NUMBER METHOD CN =65.0

TIME (HOURS)	RAINFALL (INCHES)	NET RAIN (INCHES)	DISCHARGE (CFS)
.000	.0000	.0000	.00
.500	.0132	.0000	.00
1.000	.0132	.0000	.00
1.500	.0132	.0000	.00
2.000	.0132	.0000	.00
2.500	.0132	.0000	.00
3.000	.0132	.0000	.00
3.500	.0132	.0000	.00
4.000	.0132	.0000	.00
4.500	.0176	.0000	.00
5.000	.0176	.0000	.00
5.500	.0176	.0000	.00
6.000	.0176	.0000	.00
6.500	.0220	.0000	.00
7.000	.0220	.0000	.00
7.500	.0220	.0000	.00
8.000	.0220	.0000	.00
8.500	.0297	.0000	.00
9.000	.0297	.0000	.00
9.500	.0352	.0000	.00
10.000	.0396	.0000	.00
10.500	.0506	.0000	.00

11.000	.0682	.0000	.00
11.500	.1056	.0000	.00
12.000	.8360	.0253	.00
12.500	.1584	.0240	13.76
13.000	.0814	.0151	49.63
13.500	.0594	.0121	75.15
14.000	.0462	.0101	75.30
14.500	.0330	.0075	65.87
15.000	.0330	.0078	55.58
15.500	.0330	.0081	46.80
16.000	.0330	.0083	41.41
16.500	.0198	.0051	38.80
17.000	.0198	.0052	36.13
17.500	.0198	.0053	31.35
18.000	.0198	.0054	27.40
18.500	.0198	.0055	25.66
19.000	.0198	.0056	25.04
19.500	.0198	.0057	24.96
20.000	.0198	.0058	25.07
20.500	.0132	.0039	25.33
21.000	.0132	.0039	24.64
21.500	.0132	.0040	22.18
22.000	.0132	.0040	19.98
22.500	.0132	.0040	18.96

SEVIER LANDFILL - STORM RUNOFF - 25 YEAR, 24 HOUR EVENT (BASIN A)
STORM HYDROGRAPH RAIN = 2.200 DURATION = 24.0 RUNOFF = .194
STORM DISTRIBUTION IS SCS 24-HR
CURVE NUMBER METHOD CN =65.0

TIME (HOURS)	RAINFALL (INCHES)	NET RAIN (INCHES)	DISCHARGE (CFS)
23.000	.0132	.0041	18.53
23.500	.0132	.0041	18.41
24.000	.0132	.0041	18.40
24.500	.0000	.0000	18.49
25.000	.0000	.0000	16.37
25.500	.0000	.0000	10.46
26.000	.0000	.0000	5.22
26.500	.0000	.0000	2.57
27.000	.0000	.0000	1.24
27.500	.0000	.0000	.60
28.000	.0000	.0000	.21
28.500	.0000	.0000	.03
29.000	.0000	.0000	.00
TOTALS	2.200	.1938	879.54

STORM HYDROGRAPH VOLUME = 36.34 ACRE-FEET
MAXIMUN STORM DISCHARGE = 75.30 CFS

SEVIER LANDFILL - STORM RUNOFF - 25 YEAR, 24 HOUR EVENT (BASIN B1)
UNIT HYDROGRAPH

DRAINAGE AREA (SQUARE MILES) .230
TIME OF CONCENTRATION (HOURS) .100

TIME (HOURS)	DISCHARGE (CFS)
.000	.00
.300	398.33
.600	42.18
.900	.00

TOTAL DISCHARGE = 10.922 ACRE-FEET

SEVIER LANDFILL - STORM RUNOFF - 25 YEAR, 24 HOUR EVENT (BASIN B1)
STORM HYDROGRAPH RAIN = 2.200 DURATION = 24.0 RUNOFF = .047
STORM DISTRIBUTION IS SCS 24-HR
CURVE NUMBER METHOD CN =56.0

TIME (HOURS)	RAINFALL (INCHES)	NET RAIN (INCHES)	DISCHARGE (CFS)
.000	.0000	.0000	.00
.300	.0079	.0000	.00
.600	.0079	.0000	.00
.900	.0079	.0000	.00
1.200	.0079	.0000	.00
1.500	.0079	.0000	.00
1.800	.0079	.0000	.00
2.100	.0079	.0000	.00
2.400	.0079	.0000	.00
2.700	.0079	.0000	.00
3.000	.0079	.0000	.00
3.300	.0079	.0000	.00
3.600	.0079	.0000	.00
3.900	.0079	.0000	.00
4.200	.0097	.0000	.00
4.500	.0106	.0000	.00
4.800	.0106	.0000	.00
5.100	.0106	.0000	.00
5.400	.0106	.0000	.00
5.700	.0106	.0000	.00
6.000	.0106	.0000	.00
6.300	.0132	.0000	.00
6.600	.0132	.0000	.00
6.900	.0132	.0000	.00
7.200	.0132	.0000	.00
7.500	.0132	.0000	.00
7.800	.0132	.0000	.00
8.100	.0147	.0000	.00
8.400	.0178	.0000	.00

8.700	.0178	.0000	.00
9.000	.0178	.0000	.00
9.300	.0211	.0000	.00
9.600	.0220	.0000	.00
9.900	.0238	.0000	.00
10.200	.0282	.0000	.00
10.500	.0304	.0000	.00
10.800	.0409	.0000	.00
11.100	.0484	.0000	.00
11.400	.0634	.0000	.00
11.700	.2042	.0000	.00
12.000	.6530	.0000	.00
12.300	.0950	.0000	.00
12.600	.0796	.0005	.00
12.900	.0488	.0011	.19
13.200	.0400	.0013	.44
13.500	.0356	.0015	.56

1

SEVIER LANDFILL - STORM RUNOFF - 25 YEAR, 24 HOUR EVENT (BASIN B1)
STORM HYDROGRAPH RAIN = 2.200 DURATION = 24.0 RUNOFF = .047
STORM DISTRIBUTION IS SCS 24-HR
CURVE NUMBER METHOD CN =56.0

TIME (HOURS)	RAINFALL (INCHES)	NET RAIN (INCHES)	DISCHARGE (CFS)
13.800	.0277	.0014	.64
14.100	.0251	.0014	.60
14.400	.0198	.0012	.61
14.700	.0198	.0013	.54
15.000	.0198	.0014	.56
15.300	.0198	.0015	.60
15.600	.0198	.0016	.64
15.900	.0198	.0016	.68
16.200	.0145	.0013	.72
16.500	.0119	.0011	.57
16.800	.0119	.0011	.48
17.100	.0119	.0011	.48
17.400	.0119	.0012	.50
17.700	.0119	.0012	.51
18.000	.0119	.0012	.52
18.300	.0119	.0013	.54
18.600	.0119	.0013	.55
18.900	.0119	.0013	.56
19.200	.0119	.0013	.58
19.500	.0119	.0014	.59
19.800	.0119	.0014	.60
20.100	.0106	.0013	.62
20.400	.0079	.0010	.57
20.700	.0079	.0010	.44
21.000	.0079	.0010	.43
21.300	.0079	.0010	.44
21.600	.0079	.0010	.44
21.900	.0079	.0010	.45
22.200	.0079	.0010	.45
22.500	.0079	.0011	.46
22.800	.0079	.0011	.47
23.100	.0079	.0011	.47
23.400	.0079	.0011	.48
23.700	.0079	.0011	.48

1

SEVIER LANDFILL - STORM RUNOFF - 25 YEAR, 24 HOUR EVENT (BASIN B2)
UNIT HYDROGRAPH

DRAINAGE AREA (SQUARE MILES) .240
TIME OF CONCENTRATION (HOURS) .100

TIME (HOURS)	DISCHARGE (CFS)
.000	.00
.300	415.65
.600	44.01
.900	.00

TOTAL DISCHARGE = 11.397 ACRE-FEET

1

SEVIER LANDFILL - STORM RUNOFF - 25 YEAR, 24 HOUR EVENT (BASIN B2)
STORM HYDROGRAPH RAIN = 2.200 DURATION = 24.0 RUNOFF = .085
STORM DISTRIBUTION IS SCS 24-HR
CURVE NUMBER METHOD CN =59.0

TIME (HOURS)	RAINFALL (INCHES)	NET RAIN (INCHES)	DISCHARGE (CFS)
.000	.0000	.0000	.00
.300	.0079	.0000	.00
.600	.0079	.0000	.00
.900	.0079	.0000	.00
1.200	.0079	.0000	.00
1.500	.0079	.0000	.00
1.800	.0079	.0000	.00
2.100	.0079	.0000	.00
2.400	.0079	.0000	.00
2.700	.0079	.0000	.00
3.000	.0079	.0000	.00
3.300	.0079	.0000	.00
3.600	.0079	.0000	.00
3.900	.0079	.0000	.00
4.200	.0097	.0000	.00
4.500	.0106	.0000	.00
4.800	.0106	.0000	.00
5.100	.0106	.0000	.00
5.400	.0106	.0000	.00
5.700	.0106	.0000	.00
6.000	.0106	.0000	.00
6.300	.0132	.0000	.00
6.600	.0132	.0000	.00
6.900	.0132	.0000	.00
7.200	.0132	.0000	.00
7.500	.0132	.0000	.00
7.800	.0132	.0000	.00
8.100	.0147	.0000	.00
8.400	.0178	.0000	.00

8.700	.0178	.0000	.00
9.000	.0178	.0000	.00
9.300	.0211	.0000	.00
9.600	.0220	.0000	.00
9.900	.0238	.0000	.00
10.200	.0282	.0000	.00
10.500	.0304	.0000	.00
10.800	.0409	.0000	.00
11.100	.0484	.0000	.00
11.400	.0634	.0000	.00
11.700	.2042	.0000	.00
12.000	.6530	.0007	.00
12.300	.0950	.0031	.28
12.600	.0796	.0045	1.32
12.900	.0488	.0036	1.99
13.200	.0400	.0034	1.68
13.500	.0356	.0033	1.56

SEVIER LANDFILL - STORM RUNOFF - 25 YEAR, 24 HOUR EVENT (BASIN B2)
STORM HYDROGRAPH RAIN = 2.200 DURATION = 24.0 RUNOFF = .085
STORM DISTRIBUTION IS SCS 24-HR
CURVE NUMBER METHOD CN =59.0

TIME (HOURS)	RAINFALL (INCHES)	NET RAIN (INCHES)	DISCHARGE (CFS)
13.800	.0277	.0028	1.54
14.100	.0251	.0027	1.32
14.400	.0198	.0022	1.25
14.700	.0198	.0023	1.05
15.000	.0198	.0024	1.07
15.300	.0198	.0025	1.11
15.600	.0198	.0026	1.16
15.900	.0198	.0027	1.20
16.200	.0145	.0020	1.24
16.500	.0119	.0017	.97
16.800	.0119	.0017	.80
17.100	.0119	.0018	.80
17.400	.0119	.0018	.81
17.700	.0119	.0018	.83
18.000	.0119	.0019	.84
18.300	.0119	.0019	.86
18.600	.0119	.0019	.87
18.900	.0119	.0020	.88
19.200	.0119	.0020	.90
19.500	.0119	.0020	.91
19.800	.0119	.0021	.93
20.100	.0106	.0018	.94
20.400	.0079	.0014	.86
20.700	.0079	.0014	.66
21.000	.0079	.0014	.65
21.300	.0079	.0014	.66
21.600	.0079	.0015	.66
21.900	.0079	.0015	.67
22.200	.0079	.0015	.67
22.500	.0079	.0015	.68
22.800	.0079	.0015	.69
23.100	.0079	.0015	.69
23.400	.0079	.0015	.70
23.700	.0079	.0015	.71

24.000	.0079	.0016	.71
24.300	.0000	.0000	.72
24.600	.0000	.0000	.07
24.900	.0000	.0000	.00
TOTALS	2.200	.0846	38.88

STORM HYDROGRAPH VOLUME = .96 ACRE-FEET
MAXIMUN STORM DISCHARGE = 1.99 CFS

1

SEVIER LANDFILL - STORM RUNOFF - 25 YEAR, 24 HOUR EVENT (BASIN C)
UNIT HYDROGRAPH

DRAINAGE AREA (SQUARE MILES) .260
TIME OF CONCENTRATION (HOURS) .350

TIME (HOURS)	DISCHARGE (CFS)
.000	.00
.300	332.08
.600	172.45
.900	44.39
1.200	13.98
1.500	.00

TOTAL DISCHARGE = 13.956 ACRE-FEET

1

SEVIER LANDFILL - STORM RUNOFF - 25 YEAR, 24 HOUR EVENT (BASIN C)
STORM HYDROGRAPH RAIN = 2.200 DURATION = 24.0 RUNOFF = .152
STORM DISTRIBUTION IS SCS 24-HR
CURVE NUMBER METHOD CN =63.0

TIME (HOURS)	RAINFALL (INCHES)	NET RAIN (INCHES)	DISCHARGE (CFS)
.000	.0000	.0000	.00
.300	.0079	.0000	.00
.600	.0079	.0000	.00
.900	.0079	.0000	.00
1.200	.0079	.0000	.00
1.500	.0079	.0000	.00
1.800	.0079	.0000	.00
2.100	.0079	.0000	.00
2.400	.0079	.0000	.00
2.700	.0079	.0000	.00
3.000	.0079	.0000	.00
3.300	.0079	.0000	.00
3.600	.0079	.0000	.00
3.900	.0079	.0000	.00
4.200	.0097	.0000	.00
4.500	.0106	.0000	.00
4.800	.0106	.0000	.00
5.100	.0106	.0000	.00
5.400	.0106	.0000	.00
5.700	.0106	.0000	.00
6.000	.0106	.0000	.00
6.300	.0132	.0000	.00
6.600	.0132	.0000	.00
6.900	.0132	.0000	.00
7.200	.0132	.0000	.00
7.500	.0132	.0000	.00
7.800	.0132	.0000	.00

8.100	.0147	.0000	.00
8.400	.0178	.0000	.00
8.700	.0178	.0000	.00
9.000	.0178	.0000	.00
9.300	.0211	.0000	.00
9.600	.0220	.0000	.00
9.900	.0238	.0000	.00
10.200	.0282	.0000	.00
10.500	.0304	.0000	.00
10.800	.0409	.0000	.00
11.100	.0484	.0000	.00
11.400	.0634	.0000	.00
11.700	.2042	.0000	.00
12.000	.6530	.0131	.00
12.300	.0950	.0099	4.35
12.600	.0796	.0102	5.54
12.900	.0488	.0071	5.69
13.200	.0400	.0063	4.76
13.500	.0356	.0060	3.93

SEVIER LANDFILL - STORM RUNOFF - 25 YEAR, 24 HOUR EVENT (BASIN C)
STORM HYDROGRAPH RAIN = 2.200 DURATION = 24.0 RUNOFF = .152
STORM DISTRIBUTION IS SCS 24-HR
CURVE NUMBER METHOD CN =63.0

TIME (HOURS)	RAINFALL (INCHES)	NET RAIN (INCHES)	DISCHARGE (CFS)
13.800	.0277	.0049	3.54
14.100	.0251	.0046	3.03
14.400	.0198	.0037	2.72
14.700	.0198	.0038	2.33
15.000	.0198	.0039	2.19
15.300	.0198	.0040	2.19
15.600	.0198	.0041	2.23
15.900	.0198	.0042	2.29
16.200	.0145	.0031	2.34
16.500	.0119	.0026	2.01
16.800	.0119	.0026	1.65
17.100	.0119	.0027	1.53
17.400	.0119	.0027	1.50
17.700	.0119	.0027	1.51
18.000	.0119	.0028	1.53
18.300	.0119	.0028	1.55
18.600	.0119	.0028	1.57
18.900	.0119	.0029	1.59
19.200	.0119	.0029	1.61
19.500	.0119	.0029	1.62
19.800	.0119	.0030	1.64
20.100	.0106	.0027	1.66
20.400	.0079	.0020	1.57
20.700	.0079	.0020	1.30
21.000	.0079	.0020	1.18
21.300	.0079	.0021	1.15
21.600	.0079	.0021	1.15
21.900	.0079	.0021	1.16
22.200	.0079	.0021	1.17
22.500	.0079	.0021	1.17
22.800	.0079	.0021	1.18
23.100	.0079	.0021	1.19

23.400	.0079	.0021	1.20
23.700	.0079	.0022	1.20
24.000	.0079	.0022	1.21
24.300	.0000	.0000	1.22
24.600	.0000	.0000	.50
24.900	.0000	.0000	.13
25.200	.0000	.0000	.03
25.500	.0000	.0000	.00
TOTALS	2.200	.1524	85.80

STORM HYDROGRAPH VOLUME = 2.13 ACRE-FEET
MAXIMUN STORM DISCHARGE = 5.69 CFS

1

SEVIER LANDFILL - STORM RUNOFF - 25 YEAR, 24 HOUR EVENT (BASIN D)
UNIT HYDROGRAPH

DRAINAGE AREA (SQUARE MILES) .130
TIME OF CONCENTRATION (HOURS) .440

TIME (HOURS)	DISCHARGE (CFS)
.000	.00
.300	128.74
.600	111.06
.900	32.91
1.200	11.50
1.500	3.13
1.800	.00

TOTAL DISCHARGE = 7.124 ACRE-FEET

1

SEVIER LANDFILL - STORM RUNOFF - 25 YEAR, 24 HOUR EVENT (BASIN D)
STORM HYDROGRAPH RAIN = 2.200 DURATION = 24.0 RUNOFF = .381
STORM DISTRIBUTION IS SCS 24-HR
CURVE NUMBER METHOD CN =72.0

TIME (HOURS)	RAINFALL (INCHES)	NET RAIN (INCHES)	DISCHARGE (CFS)
.000	.0000	.0000	.00
.300	.0079	.0000	.00
.600	.0079	.0000	.00
.900	.0079	.0000	.00
1.200	.0079	.0000	.00
1.500	.0079	.0000	.00
1.800	.0079	.0000	.00
2.100	.0079	.0000	.00
2.400	.0079	.0000	.00
2.700	.0079	.0000	.00
3.000	.0079	.0000	.00
3.300	.0079	.0000	.00
3.600	.0079	.0000	.00
3.900	.0079	.0000	.00
4.200	.0097	.0000	.00
4.500	.0106	.0000	.00
4.800	.0106	.0000	.00
5.100	.0106	.0000	.00
5.400	.0106	.0000	.00
5.700	.0106	.0000	.00
6.000	.0106	.0000	.00
6.300	.0132	.0000	.00
6.600	.0132	.0000	.00
6.900	.0132	.0000	.00
7.200	.0132	.0000	.00
7.500	.0132	.0000	.00

7.800	.0132	.0000	.00
8.100	.0147	.0000	.00
8.400	.0178	.0000	.00
8.700	.0178	.0000	.00
9.000	.0178	.0000	.00
9.300	.0211	.0000	.00
9.600	.0220	.0000	.00
9.900	.0238	.0000	.00
10.200	.0282	.0000	.00
10.500	.0304	.0000	.00
10.800	.0409	.0000	.00
11.100	.0484	.0000	.00
11.400	.0634	.0000	.00
11.700	.2042	.0002	.00
12.000	.6530	.1012	.03
12.300	.0950	.0276	13.06
12.600	.0796	.0252	14.80
12.900	.0488	.0164	9.65
13.200	.0400	.0139	6.98
13.500	.0356	.0127	5.07

SEVIER LANDFILL - STORM RUNOFF - 25 YEAR, 24 HOUR EVENT (BASIN D)
STORM HYDROGRAPH RAIN = 2.200 DURATION = 24.0 RUNOFF = .381
STORM DISTRIBUTION IS SCS 24-HR
CURVE NUMBER METHOD CN =72.0

TIME (HOURS)	RAINFALL (INCHES)	NET RAIN (INCHES)	DISCHARGE (CFS)
13.800	.0277	.0101	4.10
14.100	.0251	.0093	3.44
14.400	.0198	.0075	2.96
14.700	.0198	.0076	2.52
15.000	.0198	.0077	2.27
15.300	.0198	.0078	2.22
15.600	.0198	.0079	2.22
15.900	.0198	.0080	2.24
16.200	.0145	.0059	2.27
16.500	.0119	.0049	2.02
16.800	.0119	.0049	1.66
17.100	.0119	.0049	1.48
17.400	.0119	.0050	1.43
17.700	.0119	.0050	1.42
18.000	.0119	.0050	1.43
18.300	.0119	.0051	1.44
18.600	.0119	.0051	1.45
18.900	.0119	.0051	1.46
19.200	.0119	.0052	1.46
19.500	.0119	.0052	1.47
19.800	.0119	.0052	1.48
20.100	.0106	.0047	1.49
20.400	.0079	.0035	1.42
20.700	.0079	.0035	1.22
21.000	.0079	.0035	1.07
21.300	.0079	.0036	1.03
21.600	.0079	.0036	1.02
21.900	.0079	.0036	1.02
22.200	.0079	.0036	1.02
22.500	.0079	.0036	1.03
22.800	.0079	.0036	1.03

23.100	.0079	.0036	1.04
23.400	.0079	.0036	1.04
23.700	.0079	.0037	1.04
24.000	.0079	.0037	1.05
24.300	.0000	.0000	1.05
24.600	.0000	.0000	.58
24.900	.0000	.0000	.17
25.200	.0000	.0000	.05
25.500	.0000	.0000	.01
25.800	.0000	.0000	.00
TOTALS	2.200	.3808	109.43

STORM HYDROGRAPH VOLUME = 2.71 ACRE-FEET
MAXIMUN STORM DISCHARGE = 14.80 CFS

1

SEVIER LANDFILL - STORM RUNOFF - 25 YEAR, 24 HOUR EVENT (BASIN E1)
UNIT HYDROGRAPH

DRAINAGE AREA (SQUARE MILES) .160
TIME OF CONCENTRATION (HOURS) .200

TIME (HOURS)	DISCHARGE (CFS)
.000	.00
.500	171.40
1.000	20.03
1.500	.00

TOTAL DISCHARGE = 7.910 ACRE-FEET

1

SEVIER LANDFILL - STORM RUNOFF - 25 YEAR, 24 HOUR EVENT (BASIN E1)
STORM HYDROGRAPH RAIN = 2.200 DURATION = 24.0 RUNOFF = .381
STORM DISTRIBUTION IS SCS 24-HR
CURVE NUMBER METHOD CN =72.0

TIME (HOURS)	RAINFALL (INCHES)	NET RAIN (INCHES)	DISCHARGE (CFS)
.000	.0000	.0000	.00
.500	.0132	.0000	.00
1.000	.0132	.0000	.00
1.500	.0132	.0000	.00
2.000	.0132	.0000	.00
2.500	.0132	.0000	.00
3.000	.0132	.0000	.00
3.500	.0132	.0000	.00
4.000	.0132	.0000	.00
4.500	.0176	.0000	.00
5.000	.0176	.0000	.00
5.500	.0176	.0000	.00
6.000	.0176	.0000	.00
6.500	.0220	.0000	.00
7.000	.0220	.0000	.00
7.500	.0220	.0000	.00
8.000	.0220	.0000	.00
8.500	.0297	.0000	.00
9.000	.0297	.0000	.00
9.500	.0352	.0000	.00
10.000	.0396	.0000	.00
10.500	.0506	.0000	.00
11.000	.0682	.0000	.00
11.500	.1056	.0000	.00
12.000	.8360	.1014	.00
12.500	.1584	.0475	17.39
13.000	.0814	.0273	10.18
13.500	.0594	.0210	5.62
14.000	.0462	.0170	4.15

14.500	.0330	.0125	3.34
15.000	.0330	.0128	2.48
15.500	.0330	.0130	2.44
16.000	.0330	.0133	2.49
16.500	.0198	.0081	2.54
17.000	.0198	.0082	1.65
17.500	.0198	.0083	1.56
18.000	.0198	.0084	1.58
18.500	.0198	.0084	1.60
19.000	.0198	.0085	1.62
19.500	.0198	.0086	1.63
20.000	.0198	.0087	1.65
20.500	.0132	.0059	1.67
21.000	.0132	.0059	1.18
21.500	.0132	.0059	1.13
22.000	.0132	.0060	1.13
22.500	.0132	.0060	1.14

SEVIER LANDFILL - STORM RUNOFF - 25 YEAR, 24 HOUR EVENT (BASIN E1)
STORM HYDROGRAPH RAIN = 2.200 DURATION = 24.0 RUNOFF = .381
STORM DISTRIBUTION IS SCS 24-HR
CURVE NUMBER METHOD CN =72.0

TIME (HOURS)	RAINFALL (INCHES)	NET RAIN (INCHES)	DISCHARGE (CFS)
23.000	.0132	.0060	1.15
23.500	.0132	.0061	1.15
24.000	.0132	.0061	1.16
24.500	.0000	.0000	1.17
25.000	.0000	.0000	.12
25.500	.0000	.0000	.00
TOTALS	2.200	.3808	72.90

STORM HYDROGRAPH VOLUME = 3.01 ACRE-FEET
MAXIMUN STORM DISCHARGE = 17.39 CFS

1

SEVIER LANDFILL - STORM RUNOFF - 25 YEAR, 24 HOUR EVENT (BASIN E2)
UNIT HYDROGRAPH

DRAINAGE AREA (SQUARE MILES) .150
TIME OF CONCENTRATION (HOURS) .250

TIME (HOURS)	DISCHARGE (CFS)
.000	.00
.500	162.44
1.000	23.05
1.500	2.36
2.000	.00

TOTAL DISCHARGE = 7.763 ACRE-FEET

1

SEVIER LANDFILL - STORM RUNOFF - 25 YEAR, 24 HOUR EVENT (BASIN E2)
STORM HYDROGRAPH RAIN = 2.200 DURATION = 24.0 RUNOFF = .381
STORM DISTRIBUTION IS SCS 24-HR
CURVE NUMBER METHOD CN =72.0

TIME (HOURS)	RAINFALL (INCHES)	NET RAIN (INCHES)	DISCHARGE (CFS)
.000	.0000	.0000	.00
.500	.0132	.0000	.00
1.000	.0132	.0000	.00
1.500	.0132	.0000	.00
2.000	.0132	.0000	.00
2.500	.0132	.0000	.00
3.000	.0132	.0000	.00
3.500	.0132	.0000	.00
4.000	.0132	.0000	.00
4.500	.0176	.0000	.00
5.000	.0176	.0000	.00
5.500	.0176	.0000	.00
6.000	.0176	.0000	.00
6.500	.0220	.0000	.00
7.000	.0220	.0000	.00
7.500	.0220	.0000	.00
8.000	.0220	.0000	.00
8.500	.0297	.0000	.00
9.000	.0297	.0000	.00
9.500	.0352	.0000	.00
10.000	.0396	.0000	.00
10.500	.0506	.0000	.00
11.000	.0682	.0000	.00
11.500	.1056	.0000	.00
12.000	.8360	.1014	.00
12.500	.1584	.0475	16.48
13.000	.0814	.0273	10.06
13.500	.0594	.0210	5.76

14.000	.0462	.0170	4.16
14.500	.0330	.0125	3.31
15.000	.0330	.0128	2.47
15.500	.0330	.0130	2.40
16.000	.0330	.0133	2.44
16.500	.0198	.0081	2.49
17.000	.0198	.0082	1.65
17.500	.0198	.0083	1.55
18.000	.0198	.0084	1.55
18.500	.0198	.0084	1.57
19.000	.0198	.0085	1.58
19.500	.0198	.0086	1.60
20.000	.0198	.0087	1.62
20.500	.0132	.0059	1.63
21.000	.0132	.0059	1.17
21.500	.0132	.0059	1.11
22.000	.0132	.0060	1.11
22.500	.0132	.0060	1.12

SEVIER LANDFILL - STORM RUNOFF - 25 YEAR, 24 HOUR EVENT (BASIN E2)
STORM HYDROGRAPH RAIN = 2.200 DURATION = 24.0 RUNOFF = .381
STORM DISTRIBUTION IS SCS 24-HR
CURVE NUMBER METHOD CN =72.0

TIME (HOURS)	RAINFALL (INCHES)	NET RAIN (INCHES)	DISCHARGE (CFS)
23.000	.0132	.0060	1.13
23.500	.0132	.0061	1.13
24.000	.0132	.0061	1.14
24.500	.0000	.0000	1.15
25.000	.0000	.0000	.16
25.500	.0000	.0000	.01
26.000	.0000	.0000	.00
TOTALS	2.200	.3808	71.54

STORM HYDROGRAPH VOLUME = 2.96 ACRE-FEET
MAXIMUN STORM DISCHARGE = 16.48 CFS

SEVIER LANDFILL - STORM RUNOFF - 25 YEAR, 24 HOUR EVENT (BASIN F)
UNIT HYDROGRAPH

DRAINAGE AREA (SQUARE MILES) 1.040
TIME OF CONCENTRATION (HOURS) .520

TIME (HOURS)	DISCHARGE (CFS)
.000	.00
.300	805.12
.600	937.98
.900	333.37
1.200	117.15
1.500	50.66
1.800	5.66
2.100	.00

TOTAL DISCHARGE = 55.783 ACRE-FEET

SEVIER LANDFILL - STORM RUNOFF - 25 YEAR, 24 HOUR EVENT (BASIN F)
STORM HYDROGRAPH RAIN = 2.200 DURATION = 24.0 RUNOFF = .085
STORM DISTRIBUTION IS SCS 24-HR
CURVE NUMBER METHOD CN =59.0

TIME (HOURS)	RAINFALL (INCHES)	NET RAIN (INCHES)	DISCHARGE (CFS)
.000	.0000	.0000	.00
.300	.0079	.0000	.00
.600	.0079	.0000	.00
.900	.0079	.0000	.00
1.200	.0079	.0000	.00
1.500	.0079	.0000	.00
1.800	.0079	.0000	.00
2.100	.0079	.0000	.00
2.400	.0079	.0000	.00
2.700	.0079	.0000	.00
3.000	.0079	.0000	.00
3.300	.0079	.0000	.00
3.600	.0079	.0000	.00
3.900	.0079	.0000	.00
4.200	.0097	.0000	.00
4.500	.0106	.0000	.00
4.800	.0106	.0000	.00
5.100	.0106	.0000	.00
5.400	.0106	.0000	.00
5.700	.0106	.0000	.00
6.000	.0106	.0000	.00
6.300	.0132	.0000	.00
6.600	.0132	.0000	.00
6.900	.0132	.0000	.00
7.200	.0132	.0000	.00

7.500	.0132	.0000	.00
7.800	.0132	.0000	.00
8.100	.0147	.0000	.00
8.400	.0178	.0000	.00
8.700	.0178	.0000	.00
9.000	.0178	.0000	.00
9.300	.0211	.0000	.00
9.600	.0220	.0000	.00
9.900	.0238	.0000	.00
10.200	.0282	.0000	.00
10.500	.0304	.0000	.00
10.800	.0409	.0000	.00
11.100	.0484	.0000	.00
11.400	.0634	.0000	.00
11.700	.2042	.0000	.00
12.000	.6530	.0007	.00
12.300	.0950	.0031	.54
12.600	.0796	.0045	3.13
12.900	.0488	.0036	6.73
13.200	.0400	.0034	8.17
13.500	.0356	.0033	7.94

SEVIER LANDFILL - STORM RUNOFF - 25 YEAR, 24 HOUR EVENT (BASIN F)
STORM HYDROGRAPH RAIN = 2.200 DURATION = 24.0 RUNOFF = .085
STORM DISTRIBUTION IS SCS 24-HR
CURVE NUMBER METHOD CN =59.0

TIME (HOURS)	RAINFALL (INCHES)	NET RAIN (INCHES)	DISCHARGE (CFS)
13.800	.0277	.0028	7.72
14.100	.0251	.0027	7.18
14.400	.0198	.0022	6.53
14.700	.0198	.0023	5.86
15.000	.0198	.0024	5.41
15.300	.0198	.0025	5.38
15.600	.0198	.0026	5.51
15.900	.0198	.0027	5.68
16.200	.0145	.0020	5.89
16.500	.0119	.0017	5.48
16.800	.0119	.0017	4.64
17.100	.0119	.0018	4.14
17.400	.0119	.0018	4.01
17.700	.0119	.0018	4.01
18.000	.0119	.0019	4.06
18.300	.0119	.0019	4.13
18.600	.0119	.0019	4.20
18.900	.0119	.0020	4.27
19.200	.0119	.0020	4.34
19.500	.0119	.0020	4.41
19.800	.0119	.0021	4.48
20.100	.0106	.0018	4.55
20.400	.0079	.0014	4.43
20.700	.0079	.0014	3.90
21.000	.0079	.0014	3.43
21.300	.0079	.0014	3.28
21.600	.0079	.0015	3.24
21.900	.0079	.0015	3.25
22.200	.0079	.0015	3.28
22.500	.0079	.0015	3.31

22.800	.0079	.0015	3.34
23.100	.0079	.0015	3.37
23.400	.0079	.0015	3.40
23.700	.0079	.0015	3.42
24.000	.0079	.0016	3.45
24.300	.0000	.0000	3.48
24.600	.0000	.0000	2.25
24.900	.0000	.0000	.79
25.200	.0000	.0000	.27
25.500	.0000	.0000	.09
25.800	.0000	.0000	.01
26.100	.0000	.0000	.00
TOTALS	2.200	.0846	190.32

STORM HYDROGRAPH VOLUME = 4.72 ACRE-FEET
MAXIMUN STORM DISCHARGE = 8.17 CFS

1

SEVIER LANDFILL - STORM RUNOFF - 25 YEAR, 24 HOUR EVENT (BASIN G)
UNIT HYDROGRAPH

DRAINAGE AREA (SQUARE MILES) .250
TIME OF CONCENTRATION (HOURS) .180

TIME (HOURS)	DISCHARGE (CFS)
.000	.00
.500	264.54
1.000	28.98
1.500	.00

TOTAL DISCHARGE = 12.129 ACRE-FEET

1

SEVIER LANDFILL - STORM RUNOFF - 25 YEAR, 24 HOUR EVENT (BASIN G)
STORM HYDROGRAPH RAIN = 2.200 DURATION = 24.0 RUNOFF = .004
STORM DISTRIBUTION IS SCS 24-HR
CURVE NUMBER METHOD CN =50.0

TIME (HOURS)	RAINFALL (INCHES)	NET RAIN (INCHES)	DISCHARGE (CFS)
.000	.0000	.0000	.00
.500	.0132	.0000	.00
1.000	.0132	.0000	.00
1.500	.0132	.0000	.00
2.000	.0132	.0000	.00
2.500	.0132	.0000	.00
3.000	.0132	.0000	.00
3.500	.0132	.0000	.00
4.000	.0132	.0000	.00
4.500	.0176	.0000	.00
5.000	.0176	.0000	.00
5.500	.0176	.0000	.00
6.000	.0176	.0000	.00
6.500	.0220	.0000	.00
7.000	.0220	.0000	.00
7.500	.0220	.0000	.00
8.000	.0220	.0000	.00
8.500	.0297	.0000	.00
9.000	.0297	.0000	.00
9.500	.0352	.0000	.00
10.000	.0396	.0000	.00
10.500	.0506	.0000	.00
11.000	.0682	.0000	.00
11.500	.1056	.0000	.00
12.000	.8360	.0000	.00
12.500	.1584	.0000	.00
13.000	.0814	.0000	.00
13.500	.0594	.0000	.00
14.000	.0462	.0000	.00

14.500	.0330	.0000	.00
15.000	.0330	.0000	.00
15.500	.0330	.0000	.00
16.000	.0330	.0000	.00
16.500	.0198	.0000	.00
17.000	.0198	.0000	.00
17.500	.0198	.0000	.00
18.000	.0198	.0000	.00
18.500	.0198	.0001	.01
19.000	.0198	.0002	.03
19.500	.0198	.0003	.05
20.000	.0198	.0003	.07
20.500	.0132	.0003	.09
21.000	.0132	.0003	.08
21.500	.0132	.0003	.09
22.000	.0132	.0004	.10
22.500	.0132	.0004	.11

1

SEVIER LANDFILL - STORM RUNOFF - 25 YEAR, 24 HOUR EVENT (BASIN G)
STORM HYDROGRAPH RAIN = 2.200 DURATION = 24.0 RUNOFF = .004
STORM DISTRIBUTION IS SCS 24-HR
CURVE NUMBER METHOD CN =50.0

TIME (HOURS)	RAINFALL (INCHES)	NET RAIN (INCHES)	DISCHARGE (CFS)
23.000	.0132	.0004	.12
23.500	.0132	.0005	.13
24.000	.0132	.0005	.13
24.500	.0000	.0000	.14
25.000	.0000	.0000	.01
25.500	.0000	.0000	.00
TOTALS	2.200	.0039	1.15

STORM HYDROGRAPH VOLUME = .05 ACRE-FEET
MAXIMUN STORM DISCHARGE = .14 CFS

JONES & DEMILLE ENGINEERING
~~1440 South Pipe Lane~~
Richfield, Utah 84701
Telephone (435) 896-8266
Fax (435) 896-8268

Project	SAGE FLAT LANDFILL	Page	1
Location:	NEAR SIGURD, UT	Date:	8/23/04
Product.		By:	JFS
Client:	SEVIER COUNTY	Checked:	

DRAINAGE SWALE BETWEEN CELLS

FLOW BASED ON RATIONAL METHOD $Q = CIA$

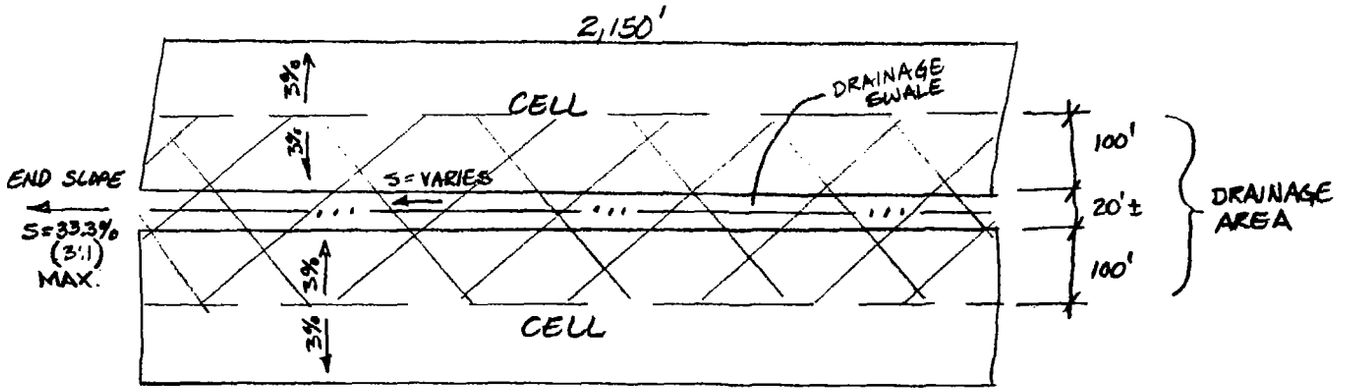

DRAINAGE SWALE — SIDE SLOPES VARY 3% (33:1) min. 33% (3:1) max.

SLOPE VARIES $S = 0.5\%$ min
$S = 1.0\%$ max
EXCEPT @ END SLOPE = 33% (3:1)

TIME OF CONCENTRATION

(a) SHEET FLOW: $T_t = \dfrac{0.007\,(nL)^{0.8}}{(P_2)^{0.5}\,S^{0.4}}$

$n = 0.15$
$L = 100'$ $S = 0.03$
$P_2 = 1.0$ in (RICHFIELD)

$T_t = \dfrac{0.007\,(0.15 \times 100)^{0.8}}{(1.0)^{0.5}\,(0.03)^{0.4}} = 1.25$ hr $= 15$ min.

T_t = travel time (hr)
n = Mannings roughness
L = flow length (ft)
P_2 = 2-year, 24-hr rainfall (in.)
S = slope (ft/ft)

(b) SHALLOW CONCENTRATED FLOW: $T_t = \dfrac{L}{3600V}$

T_t = travel time (hr)
L = flow length (ft)
V = velocity (ft/sec) fig 3.1

$L = 2150'$, $V = 1.6$ ft/sec

$T_t = \dfrac{2150}{(3600)(1.6)} = 0.37$ hr $= 22$ min.

TOTAL $T_t = 15 + 22 = 37$ min

$C = 0.15$
$A = 2150' \times 220' = 473{,}000\ ft^2 = 10.9$ acres
$I = 1.16$ in/hr (RICHFIELD, 25 yr, $T_c = 37$ min)

$Q = CIA = 0.15 \times 1.16 \times 10.9 =$ **1.90 cfs**

MAX. VELOCITY = 2.3 ft/SEC → RIPRAP IS NOT NEEDED.
(V > 6 ft/sec)

Drainage swale between cells
Worksheet for Triangular Channel

Project Description	
Project File	c:\haestad\fmw\sevcolfl.fm2
Worksheet	SEV. CO. LANDFILL-Drainage between cells
Flow Element	Triangular Channel
Method	Manning's Formula
Solve For	Channel Depth

Input Data		
Mannings Coefficient	0.150	
Channel Slope	0.005000	ft/ft
Left Side Slope	33.000000	H : V
Right Side Slope	33.000000	H : V
Discharge	1.90	cfs

— S = 0.5 %

Results		
Depth	0.47	ft
Flow Area	7.17	ft²
Wetted Perimeter	30.77	ft
Top Width	30.76	ft
Critical Depth	0.18	ft
Critical Slope	0.727949	ft/ft
Velocity	0.27	ft/s
Velocity Head	0.11e-2	ft
Specific Energy	0.47	ft
Froude Number	0.10	
Flow is subcritical.		

Drainage swale between cells
Worksheet for Triangular Channel

Project Description	
Project File	c:\haestad\fmw\sevcolfl.fm2
Worksheet	SEV. CO. LANDFILL-Drainage between cells
Flow Element	Triangular Channel
Method	Manning's Formula
Solve For	Channel Depth

Input Data		
Mannings Coefficient	0.150	
Channel Slope	0.010000	ft/ft
Left Side Slope	33.000000	H : V
Right Side Slope	33.000000	H : V
Discharge	1.90	cfs

S = 1.0 %

Results		
Depth	0.41	ft
Flow Area	5.53	ft²
Wetted Perimeter	27.02	ft
Top Width	27.01	ft
Critical Depth	0.18	ft
Critical Slope	0.727775	ft/ft
Velocity	0.34	ft/s
Velocity Head	0.18e-2	ft
Specific Energy	0.41	ft
Froude Number	0.13	
Flow is subcritical.		

Drainage swale between cells
Worksheet for Triangular Channel

Project Description	
Project File	c:\haestad\fmw\sevcolfl.fm2
Worksheet	SEV. CO. LANDFILL-Drainage between cells
Flow Element	Triangular Channel
Method	Manning's Formula
Solve For	Channel Depth

Input Data		
Mannings Coefficient	0.150	
Channel Slope	0.005000	ft/ft
Left Side Slope	3.000000	H : V
Right Side Slope	3.000000	H : V
Discharge	1.90	cfs

— S = 0.5 %

Results		
Depth	1.16	ft
Flow Area	4.04	ft²
Wetted Perimeter	7.34	ft
Top Width	6.96	ft
Critical Depth	0.48	ft
Critical Slope	0.566769	ft/ft
Velocity	0.47	ft/s
Velocity Head	0.34e-2	ft
Specific Energy	1.16	ft
Froude Number	0.11	
Flow is subcritical.		

Drainage swale between cells
Worksheet for Triangular Channel

Project Description	
Project File	c:\haestad\fmw\sevcolfl.fm2
Worksheet	SEV. CO. LANDFILL-Drainage between cells
Flow Element	Triangular Channel
Method	Manning's Formula
Solve For	Channel Depth

Input Data		
Mannings Coefficient	0.150	
Channel Slope	0.010000	ft/ft
Left Side Slope	3.000000	H : V
Right Side Slope	3.000000	H : V
Discharge	1.90	cfs

S = 1.0 %

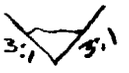

Results		
Depth	1.02	ft
Flow Area	3.11	ft²
Wetted Perimeter	6.44	ft
Top Width	6.11	ft
Critical Depth	0.48	ft
Critical Slope	0.566774	ft/ft
Velocity	0.61	ft/s
Velocity Head	0.01	ft
Specific Energy	1.02	ft
Froude Number	0.15	
Flow is subcritical.		

Drainage swale between cells @ end
Worksheet for Triangular Channel

Project Description	
Project File	c:\haestad\fmw\sevcolfl.fm2
Worksheet	SEV. CO. LANDFILL-Drainage between cells
Flow Element	Triangular Channel
Method	Manning's Formula
Solve For	Channel Depth

Input Data		
Mannings Coefficient	0.150	
Channel Slope	0.333300	ft/ft
Left Side Slope	3.000000	H : V
Right Side Slope	3.000000	H : V
Discharge	1.90	cfs

S = 33.3% (3:1)

Results		
Depth	0.53	ft
Flow Area	0.84	ft²
Wetted Perimeter	3.34	ft
Top Width	3.17	ft
Critical Depth	0.48	ft
Critical Slope	0.566795	ft/ft
Velocity	2.27	ft/s
Velocity Head	0.08	ft
Specific Energy	0.61	ft
Froude Number	0.78	
Flow is subcritical.		

Appendix J

SECTION 02315

EXCAVATION AND EMBANKMENT

PART 1 GENERAL

1.1 SECTION INCLUDES

A. Excavating materials for landfill trenches.

B. Constructing embankments for landfill trenches.

1.2 RELATED SECTIONS

A. Section 02320 - Bottom Liner.

B. Section 02321 - Intermediate Cover.

C. Section 02321 - Final Cover.

1.3 REFERENCES

A. American Association of State Highway and Transportation Officials (AASHTO):
1. AASHTO T99 - Moisture-Density relations of Soils Using a 5.5 lb (2.5 kg) Rammer and a 12-in. (305 mm) Drop.

B. American Society for Testing and Materials (ASTM):
1. ASTM D2922 - Test Methods for Density of Soil and Soil-Aggregate in Place by Nuclear Methods (Shallow Depth).

1.4 DEFINITIONS

A. Clearing: Removal and disposal of logs, limbs, sticks, vegetation, rubbish, debris, and other material on ground surface.

B. Grubbing: Removal and disposal of roots, buried logs, debris, and other underground material.

PART 2 PRODUCTS

Not used.

PART 3 EXECUTION

3.1 PREPARATION

A. Identify required lines, grades, and elevations.

B. Clear and grub all vegetation and debris within staked area.

C. Dispose of vegetation, debris and other unsuitable material off site.

3.2 EXCAVATION

A. Excavate topsoil to depth not less than 4 inches. Stockpile topsoil on site at designated area.

B. Excavate subsoil to grades and lines as staked and indicated on Drawings. Stockpile subsoil on site at designated area.

C. Excavate trench side slopes at maximum 1:2 horizontal to vertical. If unstable conditions exist, flatten trench side slopes as required to meet OSHA requirements.

D. Remove and dispose of unsuitable excavated materials off site.

E. Do not expose more than 180 feet of trench at any time.

3.3 EMBANKMENT

A. Use suitable excavated materials to build embankments. Do not use frozen materials, organic materials, rubbish, debris, or other objectionable materials.

B. If embankment height is 6 feet or less and underlying ground consists of loose material, scarify and compact top 8 inches of ground to at least 90 percent of maximum laboratory density.

C. Do not place embankment over porous, wet, frozen, or spongy surfaces.

D. Uniformly spread embankment materials in layers not exceeding 12 inches non-compacted depth. If tests indicate unsatisfactory density, reduce layer thickness.

E. Compact each layer to at least 95 percent of maximum laboratory density.

F. Maintain optimum moisture content of embankment materials.

3.4 FINISHING

A. Finish excavated areas and embankment to reasonably smooth and uniform surface.

3.5 TOLERANCES

A. Moisture Content: Plus 3 percent or minus 1 percent of optimum.

B. Finish Subgrade Surface: Plus or minus 0.1 feet of required elevation.

3.6 QUALITY CONTROL TESTING

A. Perform density tests in accordance with ASTM D2922. Determine maximum laboratory density in accordance with AASHTO T99, Method D.
   1. Frequency of Tests: Take minimum of 2 random density tests for each 1,500 square yards of embankment.
   2. Acceptance: Average density is 95 percent or greater lot. Reject tests less than 92 percent.
   3. If tests indicate Work is not acceptable, re-compact and retest.

3.7 PROTECTION

A. Protect bench marks, survey control points, and existing features remaining from displacement and damage.

B. Maintain adequate drainage and keep excavated areas free of standing water.

END OF SECTION

SECTION 02320

BOTTOM LINER

PART 1 GENERAL

1.1 SECTION INCLUDES

A. Clay bottom liner for landfill cells.

1.2 RELATED SECTIONS

A. Section 02315 - Excavation and Embankment.

1.3 REFERENCES

A. American Association of State Highway and Transportation Officials (AASHTO):
   1. AASHTO T99 - Moisture-Density relations of Soils Using a 5.5 lb (2.5 kg) Rammer and a 12-in. (305 mm) Drop.

B. American Society for Testing and Materials (ASTM):
   1. ASTM D2922 - Test Methods for Density of Soil and Soil-Aggregate in Place by Nuclear Methods (Shallow Depth).

1.4 ENVIRONMENTAL REQUIREMENTS

A. Remove snow prior to work on bottom liner.

B. Remove frozen materials and replace with non-frozen materials.

PART 2 PRODUCTS

2.1 MATERIALS

A. Bottom Liner: Clay material conforming to the following:
   1. At least 35 percent material passing 200 sieve.
   2. Plasticity index between 10 and 30 percent.
   3. No more than 10 percent gravel particles between 1 and 2 inches in diameter.
   4. Reasonable free of organic material.

PART 3 EXECUTION

3.1 PREPARATION

A. Establish elevation grid at bottom of trench.

3.2 CONSTRUCTION

A. Excavate 24 inches of subsoil from bottom of trench. Stockpile material on site.

B. Construct bottom liner in lifts not exceeding 8 inches compacted thickness. Construct bottom liner to total compacted thickness of 24 inches.

C. Compact each lift to 95 percent of maximum laboratory density. Maintain optimum moisture content of material.

D. Construct liner of homogeneous material free of lenses, pockets, streaks, voids, laminations or other imperfections. Provide satisfactory bonding between each lift.

E. Slope bottom liner at 2 percent towards leachate collection system.

3.3 FINISHING

A. Finish bottom liner to reasonably smooth and uniform surface.

B. Check final elevations at same locations after placement of liner to verify thickness.

3.4 TOLERANCES

A. Moisture Content: Plus 3 percent or minus 1 percent of optimum.

B. Finish Subgrade Surface: Plus or minus 0.1 feet of required elevation.

3.5 QUALITY CONTROL TESTING

A. Perform density tests in accordance with ASTM D2922. Determine maximum laboratory density in accordance with AASHTO T99, Method D.
   1. Frequency of Tests: Take minimum of 1 random density test for each 500 cubic yards.
   2. Acceptance: Average density is 95 percent or greater. Reject tests less than 92 percent.
   3. If tests indicate Work is not acceptable, re-compact and retest.

B. Permeability: Determine using sealed single ring infiltrometer apparatus.
   1. Frequency: Take one test for each 1,000 cubic yards. Run duplicate test at same time for each third test.
   2. Acceptance: Not exceed $1x10^{-7}$ cm/sec.
   3. If tests indicate Work is not acceptable, re-compact and retest.

3.6 PROTECTION

A. Maintain bottom liner until placement of waste.

B. Keep surface of bottom liner moist to prevent desiccation.

C. If desiccation cracks appear, repair with powdered bentonite prior to waste placement.

END OF SECTION

SECTION 02321

INTERMEDIATE COVER

PART 1 GENERAL

1.1 SECTION INCLUDES

A. Intermediate cover placed over compacted waste.

1.2 RELATED SECTIONS

A. Section 02315 - Excavation and Embankment.

1.3 REFERENCES

A. American Association of State Highway and Transportation Officials (AASHTO):
   1. AASHTO T99 - Moisture-Density relations of Soils Using a 5.5 lb (2.5 kg) Rammer and a 12-in. (305 mm) Drop.

B. American Society for Testing and Materials (ASTM):
   1. ASTM D2922 - Test Methods for Density of Soil and Soil-Aggregate in Place by Nuclear Methods (Shallow Depth).

PART 2 PRODUCTS

2.1 MATERIALS

A. Intermediate Cover: Clay material excavated from trenches.

B. Gravel: Road base material from natural or crushed aggregate.

PART 3 EXECUTION

3.1 PREPARATION

A. Identify location for intermediate cover.

3.2 CONSTRUCTION

A. Place intermediate cover material in lifts not exceeding 9 inches compacted depth. Place cover to total depth of 18 inches.

B. Compact each layer to at least 90 percent of maximum laboratory density.

C. Maintain optimum moisture content of materials.

D. Place gravel material in unloading area as necessary to provide suitable access for traffic.

3.3 FINISHING

A. Finish intermediate cover and gravel to reasonably smooth and uniform surface.

3.4 TOLERANCES

A. Moisture Content: Plus 3 percent or minus 1 percent of optimum.

3.5 QUALITY CONTROL TESTING

A. Perform density tests in accordance with ASTM D2922. Determine maximum laboratory density in accordance with AASHTO T99, Method D.
   1. Frequency of Tests: Take minimum of 1 random density test for each 1,000 cubic yards.
   2. Acceptance: Average density is 90 percent or greater.
   3. If tests indicate Work is not acceptable, re-compact and retest.

3.6 PROTECTION

A. Maintain intermediate cover until waste is placed over intermediate cover.

END OF SECTION

SECTION 02322

FINAL COVER

PART 1 GENERAL

1.1 SECTION INCLUDES

A. Final cover placed over compacted waste.

1.2 RELATED SECTIONS

A. Section 02315 - Excavation and Embankment.

B. Section 02925 - Revegetation.

1.3 REFERENCES

A. American Association of State Highway and Transportation Officials (AASHTO):
   1. AASHTO T99 - Moisture-Density relations of Soils Using a 5.5 lb (2.5 kg) Rammer and a 12-in. (305 mm) Drop.

B. American Society for Testing and Materials (ASTM):
   1. ASTM D2922 - Test Methods for Density of Soil and Soil-Aggregate in Place by Nuclear Methods (Shallow Depth).

PART 2 PRODUCTS

2.1 MATERIALS

A. Clay Liner: Natural clay excavated form trenches or obtained form borrow site.

B. Native Soil: Soil excavated from trenches.

C. Topsoil: Topsoil excavated from trenches.

PART 3 EXECUTION

3.1 PREPARATION

A. Verify waste is ready for final cover.

3.2 CONSTRUCTION

A. Place clay liner in lifts not exceeding 8 inches. Compact each lift to at least 95 percent of maximum laboratory density. Maintain optimum moisture content of clay material. Construct clay liner to total compacted thickness of 18 inches.

B. Place native soil over clay liner in two equal lifts. Compact each lift to 95 percent of maximum laboratory density. Maintain optimum moisture of native soil. Construct native soil to total compacted thickness of 14 inches.

C. Place topsoil over native soil to 6 inches compacted thickness. Compact to 85 percent of maximum laboratory density. Maintain optimum moisture content of topsoil.

D. Grade finish cross slope of cell to slope at 3 percent grade toward edges.

3.3 FINISHING

A. Finish final grade to reasonable smooth and uniform surface.

3.4 TOLERANCES

A. Moisture Content: Plus 3 percent or minus 1 percent of optimum.

B. Finish Grade Surface: Plus or minus 0.1 feet of required elevation.

3.5 QUALITY CONTROL TESTING

A. Perform density tests in accordance with ASTM D2922. Determine maximum laboratory density in accordance with AASHTO T99, Method D.
   1. Frequency of Tests: Take minimum of 1 random density test for each 500 cubic yards of material.
   2. Acceptance:
      a) Average density is 95 percent or greater for clay liner and native soil.
      b) Average density is 85 percent or greater for topsoil.
      c) Reject single tests 4 percent or more below specified density.
   3. If tests indicate Work is not acceptable, re-compact and retest.

B. Permeability: Determine using sealed single ring infiltrometer apparatus. Tesing required for clay liner.
   1. Frequency: Take one test for each 1,000 cubic yards. Run duplicate test at same time for each third test.
   2. Acceptance: Not exceed $1x10^{-7}$ cm/sec.
   3. If tests indicated Work is not acceptable, re-compact and retest.

3.6 PROTECTION

A. Maintain clay liner until native soil is placed.

B. Keep surface of clay liner moist to prevent desiccation.

END OF SECTION

SECTION 02925

REVEGETATION

PART 1 GENERAL

1.1 SECTION INCLUDES

A. Seeding for final cover.

1.2 RELATED SECTIONS

A. Section 02322 - Final Cover.

1.3 QUALITY ASSURANCE

A. Provide seed mixture in containers showing percentage of seed mix, year of production, net weight, date of packaging, and location of packaging.

1.4 ENVIRONMENTAL REQUIREMENTS

A. If possible, apply seed in fall or spring.

PART 2 PRODUCTS

2.1 MATERIALS

A. Seed Mixture: Contain typical native species found in surrounding areas. Do not use wet, moldy or other damaged seed.

B. Water: Clean, fresh and free of substances of matter which could inhibit vigorous growth of seeds.

PART 3 EXECUTION

3.1 PREPARATION

A. Verify topsoil is in place and has been final graded.

B. Loosen top surface soil, ½ inch minimum depth.

C. Moisten topsoil, but don't over water to create muddy soil.

3.2 APPLICATION

A. Apply seed mixture on final cover and other disturbed areas. Apply seed evenly at 50 pounds per acre.

B. Apply seed mixture using one of the following methods:
   1. Hydraulic Method: Mix seed mixture with water to produce a slurry and apply by hydrospraying.
   2. Drill Method: Apply seed mixture by seed drilling equipment to 1/4 to 1/2 inch depth.
   3. Broadcast Method: Apply seed mixture at double rate specified. Cover by use of harrow, chain, or rake.

C. Do not apply seed mixture during windy periods, during excessively dry periods, or when ground is excessively wet or frozen.

3.3 PROTECTION

A. Protect seeded area until final acceptance of Work.

B. Repair any damage to seeded areas.

END OF SECTION

Appendix K

SAGE FLAT LANDFILL
SEVIER COUNTY, UTAH
2004

PROJECT NO.	SHEET NO.
0406-137	1

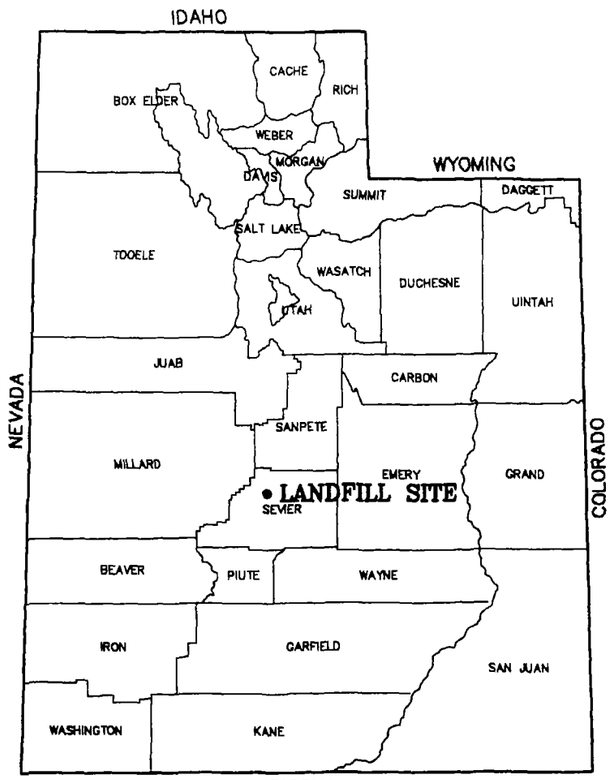

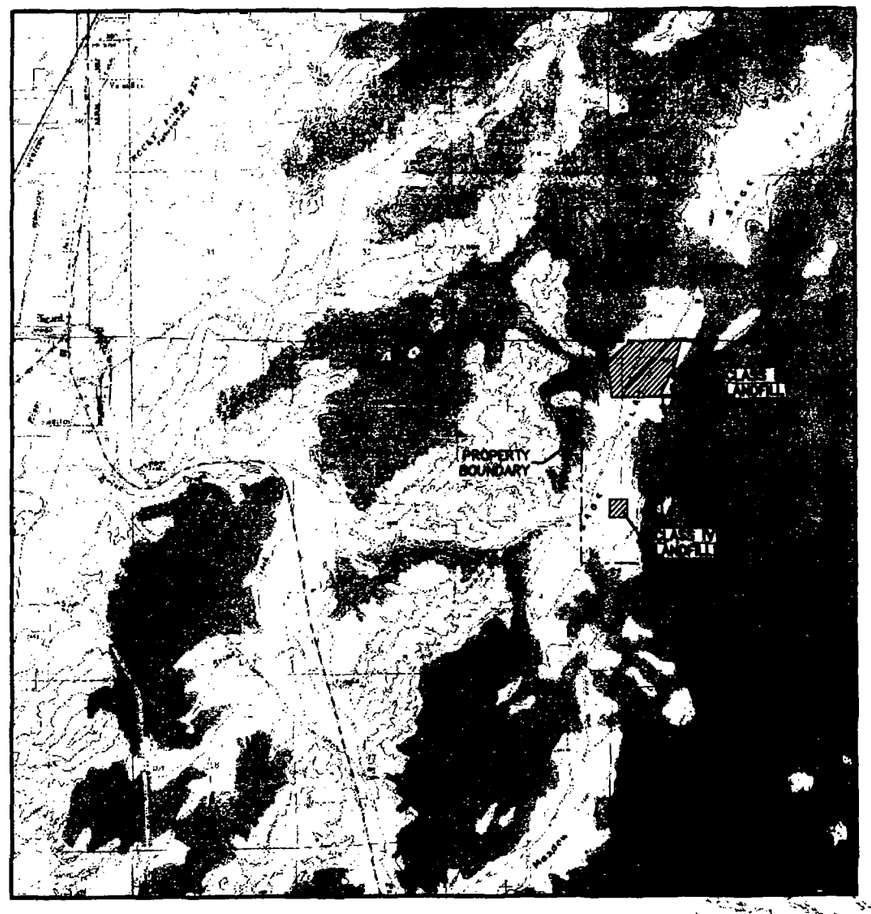

VICINITY MAP

INDEX TO DRAWINGS

SHEET NO.	DESCRIPTION
1	TITLE SHEET
2	INDEX TO PLAN SHEETS
3-6	SITE PLAN SHEETS
7	CLASS I LANDFILL CROSS SECTIONS
8-9	LEACHATE COLLECTION DETAILS
10-11	TYPICAL SECTIONS
12	FENCE DETAILS

Jones & DeMille Engineering
1535 South 100 West - Richfield, Utah 84701
Phone (435) 896-8266
Fax (435) 896-8268
www.jonesanddemille.com

LICENSED PROFESSIONAL ENGINEER
NO. 176925
JOHN F. SPENDLOVE
STATE OF UTAH
8/25/04

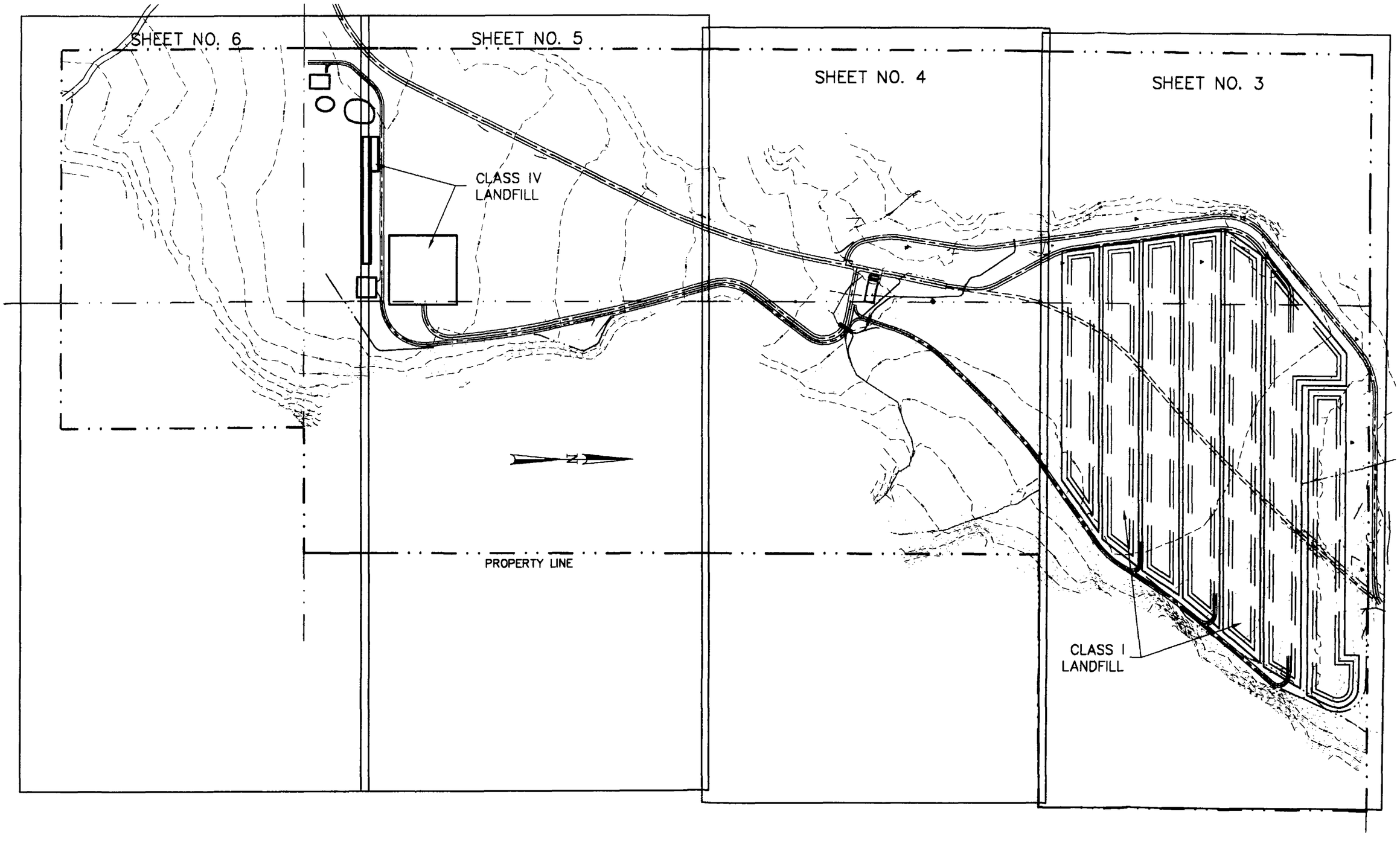

Jones & DeMille Engineering
1535 South 100 West – Richfield, Utah 84701
Phone (435) 896-8266
Fax (435) 896-8268
www.jonesanddemille.com

Sage Flat Landfill
Index to Sheets

ENGINEER J.F.S.	DRAWN L.G.	SHEET NO. 2
CHECKED J.F.S.	PROJ#: 0406-137 DWG.NM: PERMIT/DESIGN	
SCALE 1" = 500'	DATE 08/11/2004	

BYPASS ROAD

CHAIN LINK FENCE ON PROPERTY LINE

PROPERTY LINE

TYPE "A" SURFACE DITCH 1' DEPTH

END CHAIN LINK FENCE

RIP RAP LINED DITCH

CELL # 1

CELL # 2

CELL # 3

CELL # 4

CELL # 5

CELL # 6

CELL # 7

EQUIPMENT ACCESS ROAD "A"

CLASS I LANDFILL

N

MATCHLINE SEE SHEET #4

PROPERTY LINE

REVISIONS:	ENGINEER J.F.S.	DRAWN S.L.L./T.R.G.	Jones & DeMille Engineering 1538 South 100 West Richfield, Utah 84701 (801) 896-5266 Fax # (801) 896-5298	SAGE FLAT LANDFILL	
	PROJECT NO. 0405-137	DRAWING NAME permit\design		SITE PLAN	SHEET NO. 3
	SCALE 1" = 200'	DATE 08/11/2004			

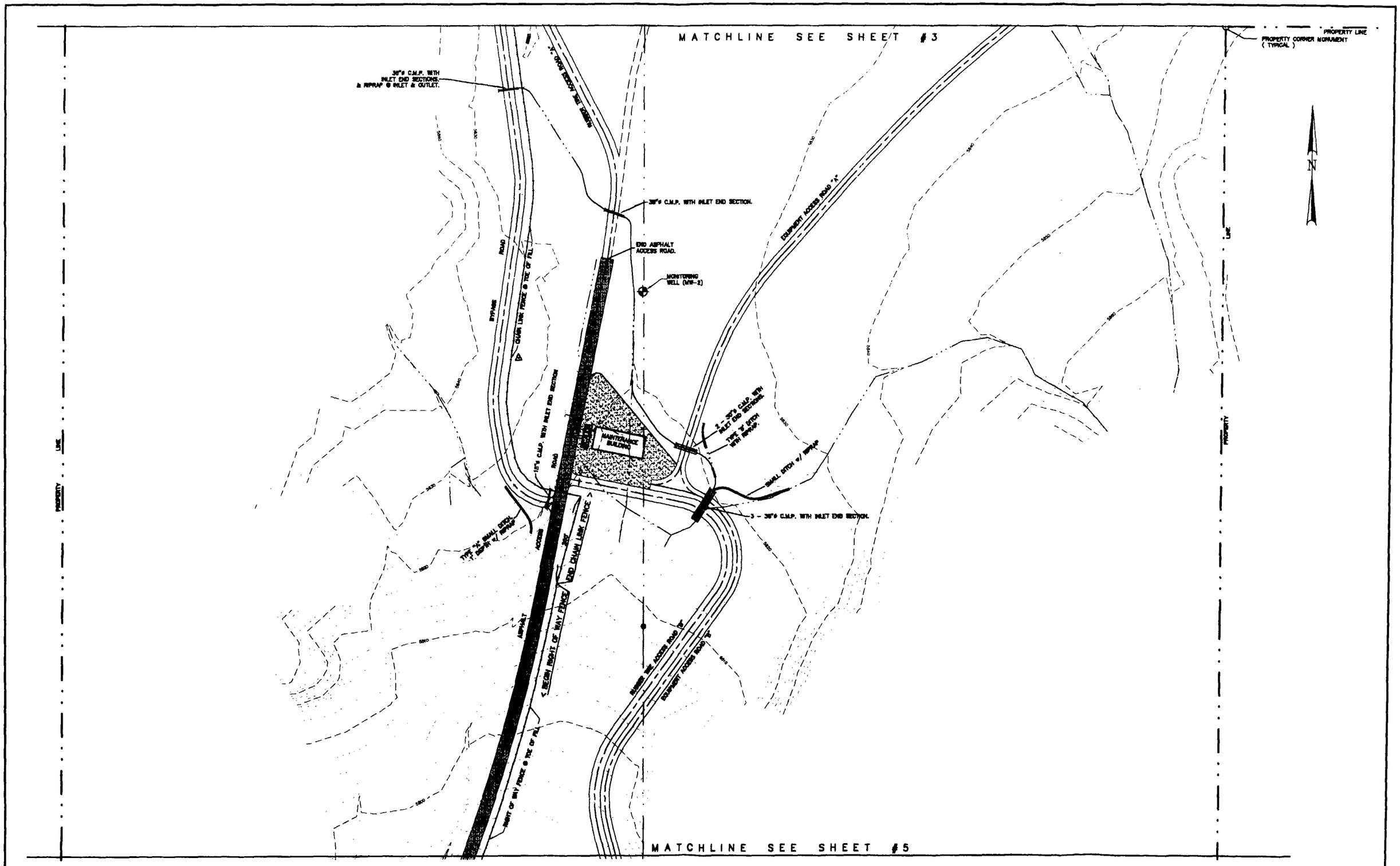

REVISIONS:	ENGINEER J.F.S.	DRAWN B.L.L./T.R.G.	Jones & DeMille Engineering 1535 South 100 West Richfield, Utah 84701 (801) 896-8256 Fax # (801) 896-8268	SAGE FLAT LANDFILL	
	PROJECT NO. 0406-137	DRAWING NAME permit\design		SITE PLAN	SHEET NO. 4
	SCALE 1" = 200'	DATE 08/11/2004			

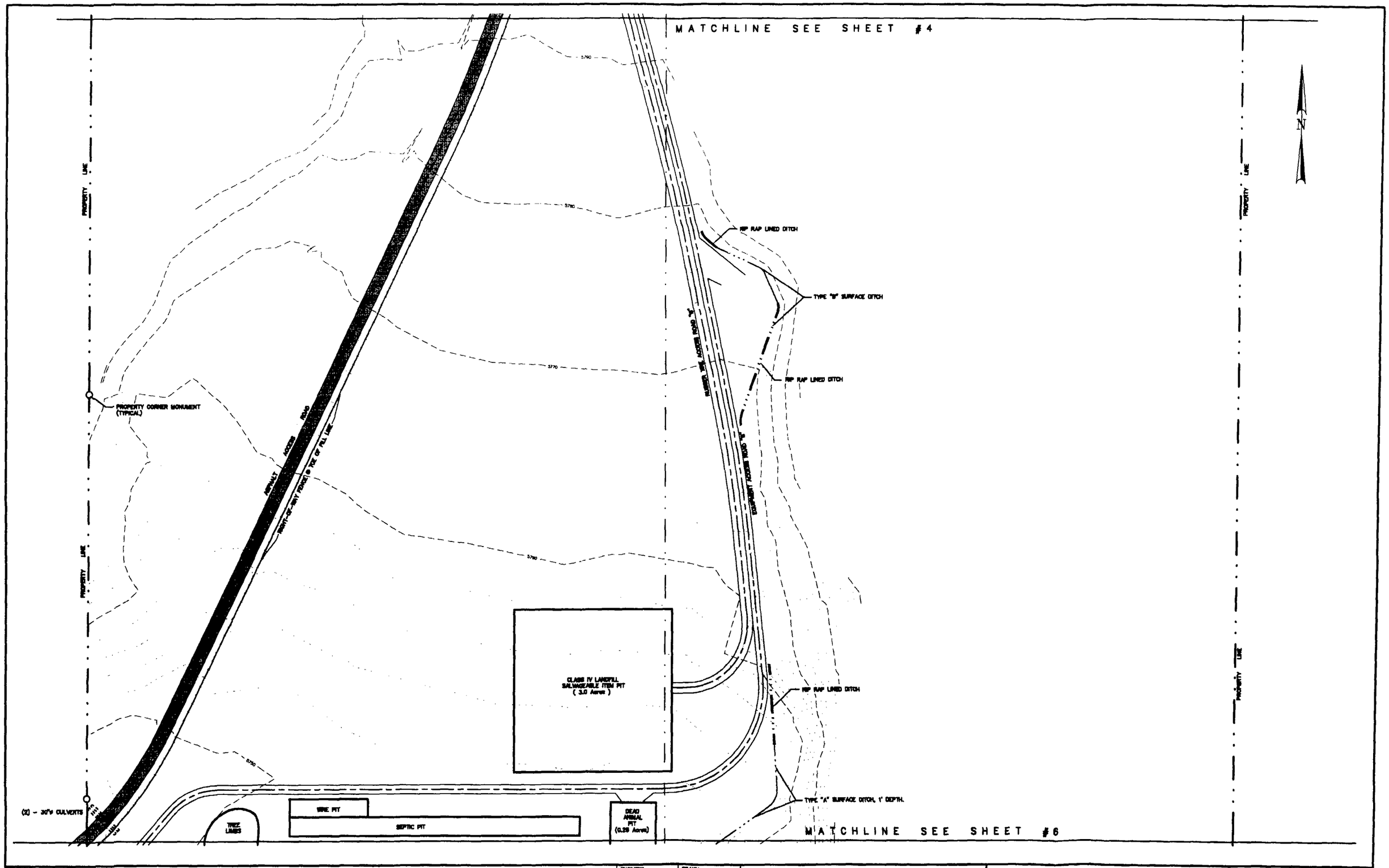

REVISIONS:

ENGINEER J.F.S.	DRAWN B.L.L./T.R.G.	Jones & DeMille Engineering 1535 South 100 West Richfield, Utah 84701 (801) 896-6255 Fax # (801) 896-6268	SAGE FLAT LANDFILL
PROJECT NO. 0405-137	DRAWING NAME permit\design		SITE PLAN
SCALE 1" = 200'	DATE 08/11/2004		SHEET NO. 5

MATCHLINE SEE SHEET #5

TREE LIMBS

DEAD ANIMAL PIT

MONITORING WELL (MW-1)

CONTAMINATED SOIL

ASBESTOS

RIP RAP LINED DITCH

TYPE "A" SURFACE DITCH 1' DEEP, 1' DEPTH REQ'D.

PROPERTY LINE

4 | 3
9 | 10

PROPERTY LINE

PROPERTY LINE

PROPERTY LINE

RIGHT-OF-WAY FENCE ALONG PROPERTY LINE

5760

5770

5780

5790

5800

5810

5820

EXISTING DIRT ROAD

END RIGHT-OF-WAY FENCE

PROPERTY CORNER MONUMENT (TYPICAL)

PROPERTY LINE

N

REVISIONS:

ENGINEER: J.F.S.	DRAWN: B.L.L./T.R.G.
PROJECT NO.: 0408-137	DRAWING NAME: permit\design
SCALE: 1" = 200'	DATE: 08/11/2004

Jones & DeMille Engineering
1535 South 100 West Richfield, Utah 84701
(801) 896-8266
Fax # (801) 896-8268

SAGE FLAT LANDFILL

SITE PLAN

SHEET NO. 6

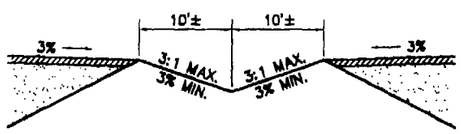

DRAINAGE SWALE

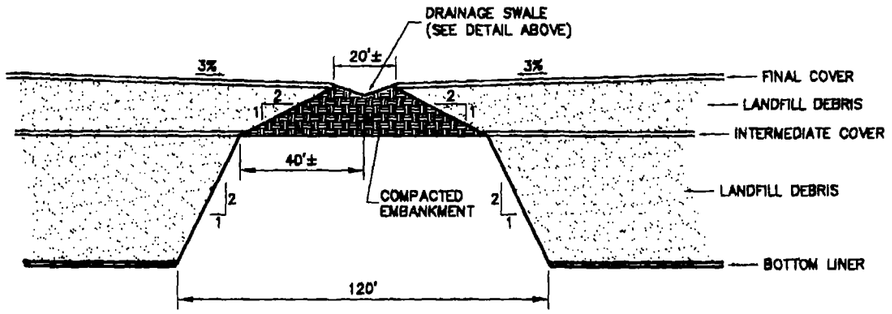

TYPICAL CROSS-SECTION BETWEEN CELLS

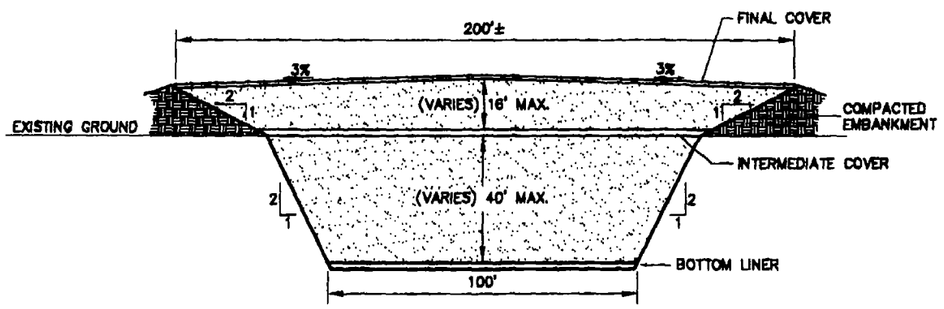

TYPICAL CELL CROSS-SECTION

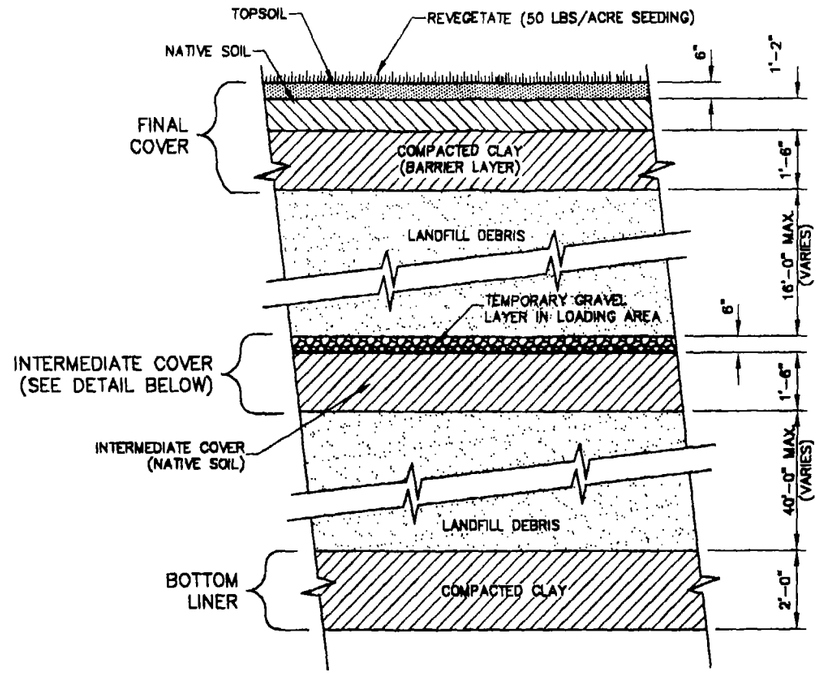

CELL DETAIL

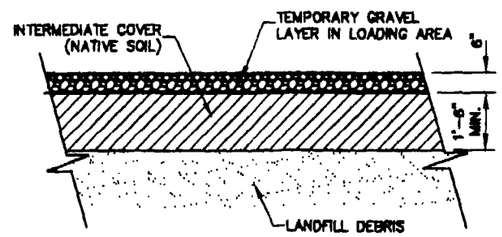

INTERMEDIATE COVER DETAIL

Jones & DeMille Engineering
1535 South 100 West – Richfield, Utah 84701
Phone (435) 896-8266
Fax (435) 896-8268
www.jonesanddemille.com

Sage Flat Landfill
Class I Landfill Cross Sections

ENGINEER	DRAWN	SHEET NO.
J.F.S.	TB/LG/BL	7
CHECKED	PROJ#: 0406-137	
J.F.S.	DWG.NM: cross-sect..	
SCALE	DATE	
VARIES	08/24/2004	

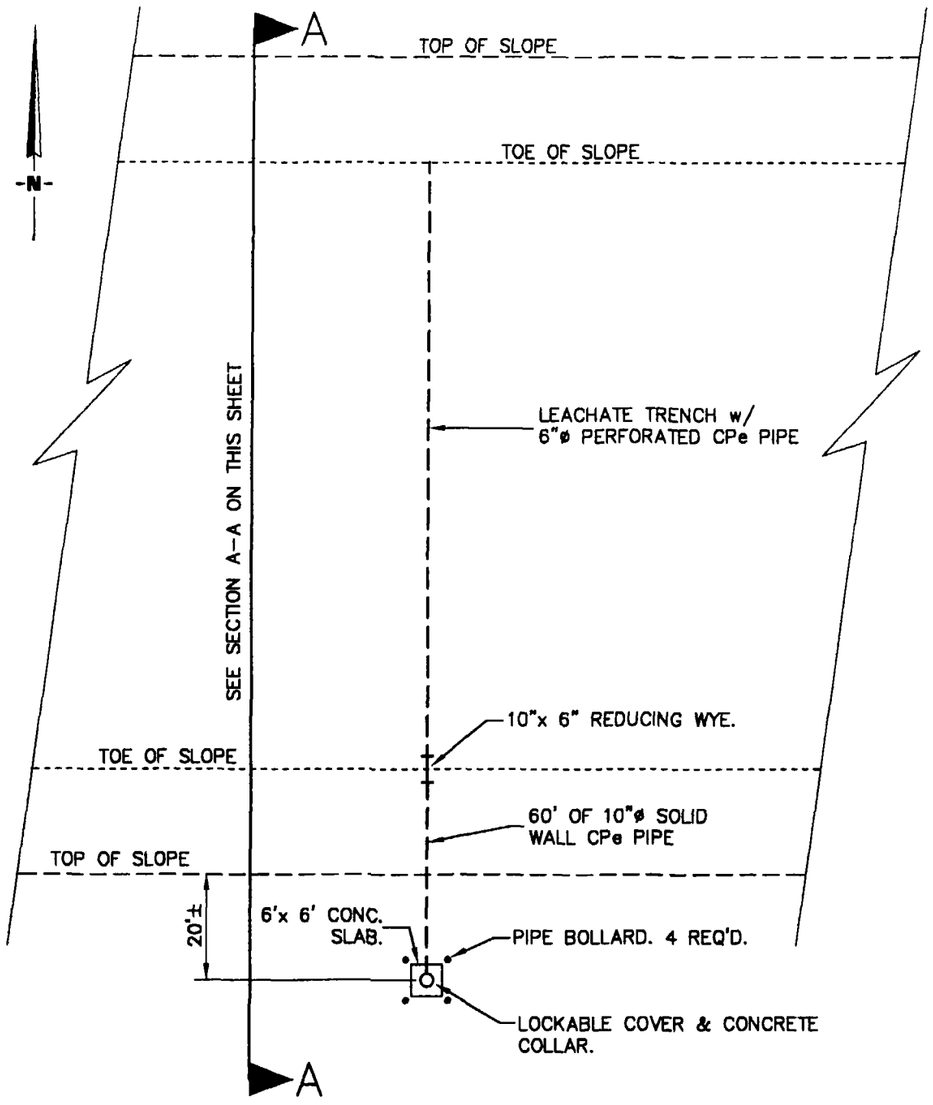

PLAN VIEW

SCALE: 1" = 30'

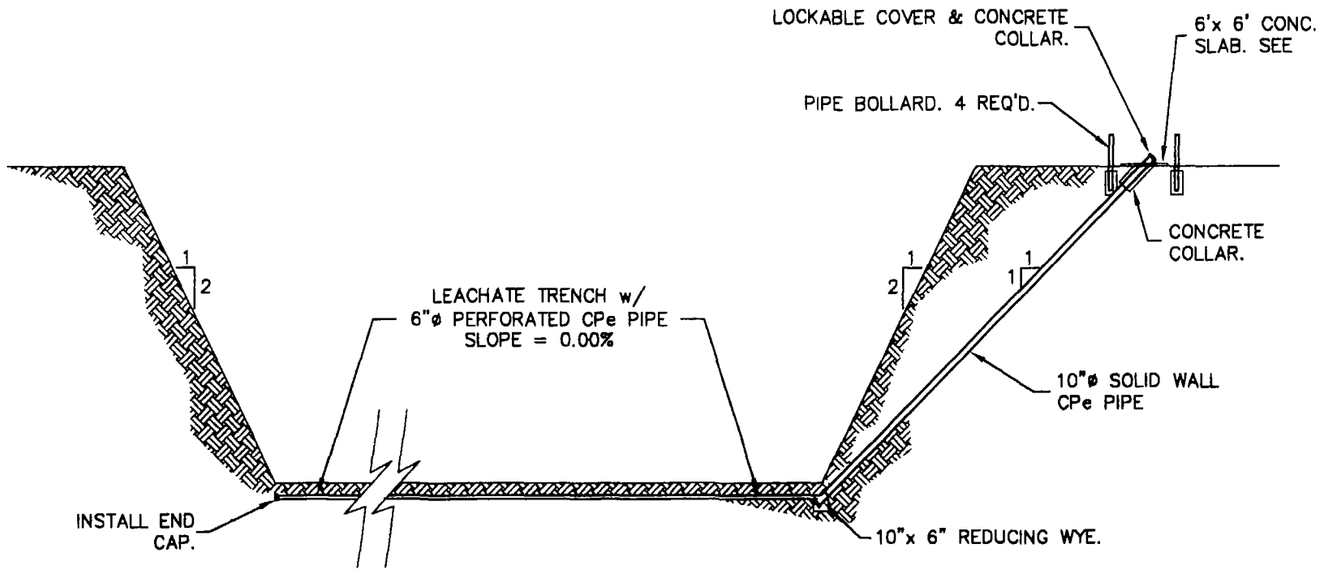

SECTION A-A

SCALE: 1" = 20'

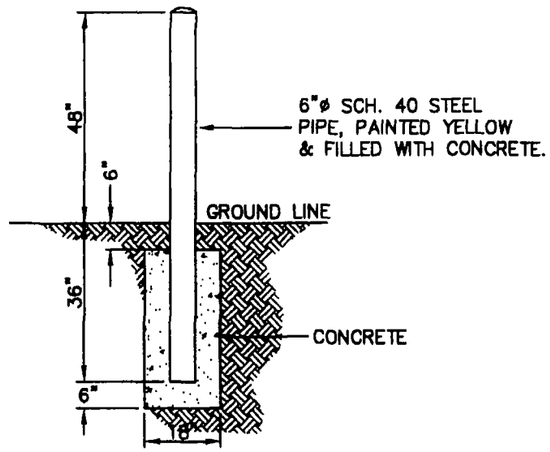

PIPE BOLLARD DETAIL

NO SCALE

Jones & DeMille Engineering
1535 South 100 West – Richfield, Utah 84701
Phone (435) 896-8266
Fax (435) 896-8268
www.jonesanddemille.com

Sage Flat Landfill
Leachate Collection System Details

ENGINEER	DRAWN	SHEET NO.
T.M.J.	T.R.B./L.G.	8
CHECKED	PROJ#: 0406-137	
J.F.S.	DWG.NM: permit\plan	
SCALE	DATE	
VARIES	08/11/2004	

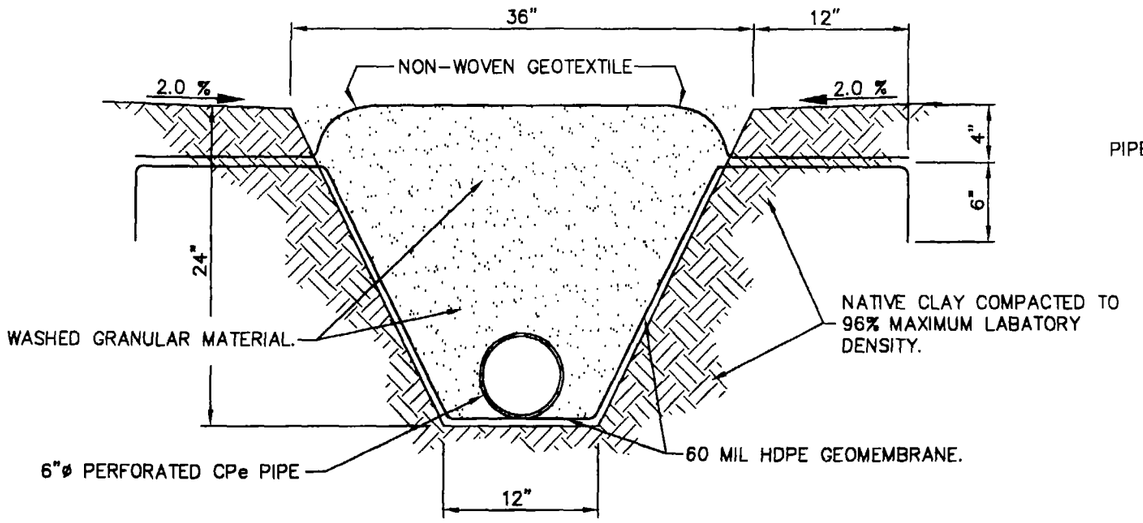

LEACHATE COLLECTION TRENCH DETAIL

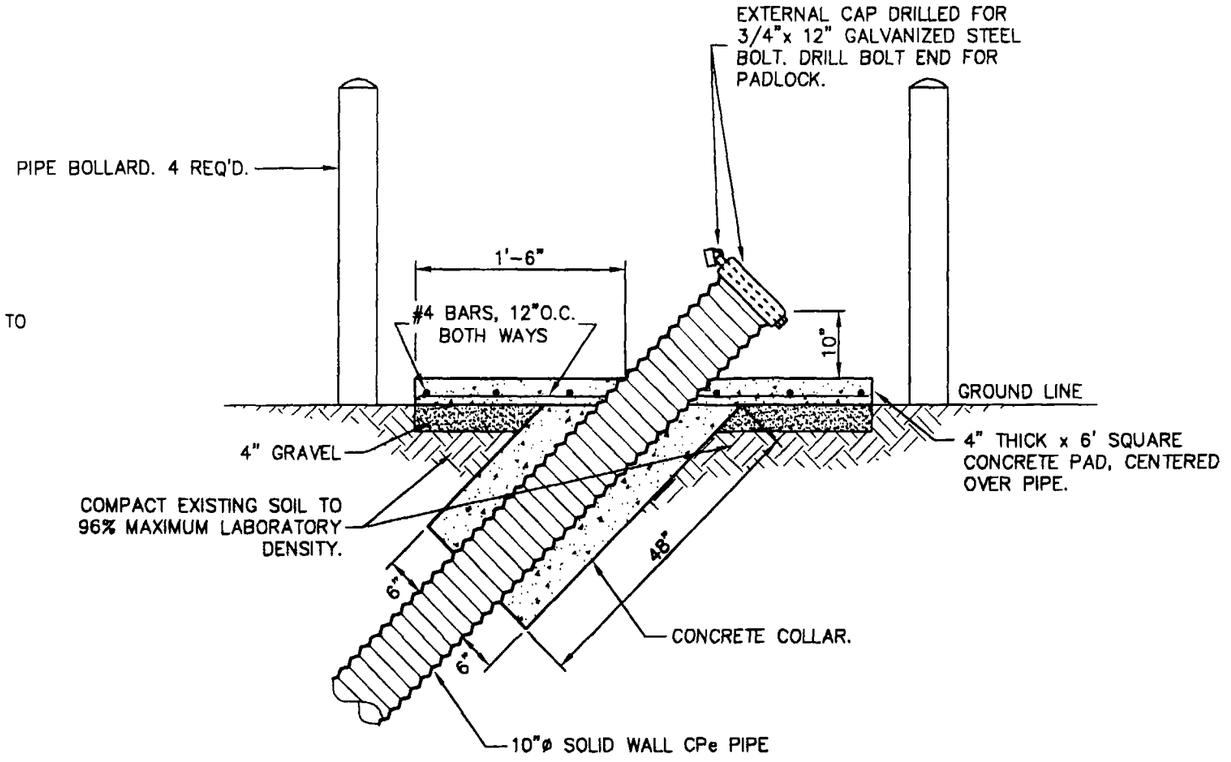

PAD, LOCKABLE COVER & CONCRETE COLLAR DETAIL

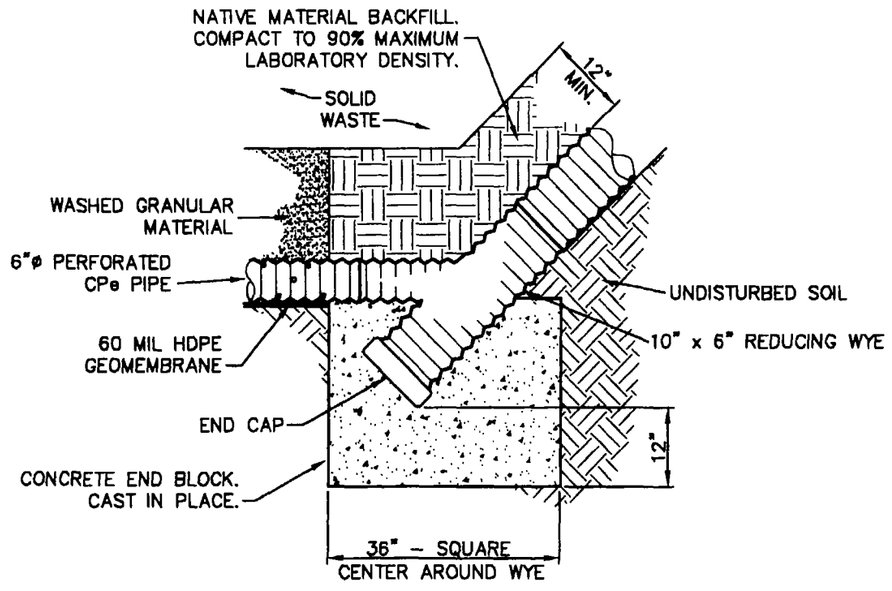

10" x 6" REDUCING WYE DETAIL

Jones & DeMille Engineering
1535 South 100 West – Richfield, Utah 84701
Phone (435) 896-8266
Fax (435) 896-8268
www.jonesanddemille.com

Sage Flat Landfill
Leachate Collection System Details

ENGINEER	DRAWN	SHEET NO.
J.F.S.	T.R.B./L.G.	9
CHECKED: J.F.S.	PROJ#: D406-137 DWG.NM: permit\details	
SCALE: none	DATE: 08/11/2004	

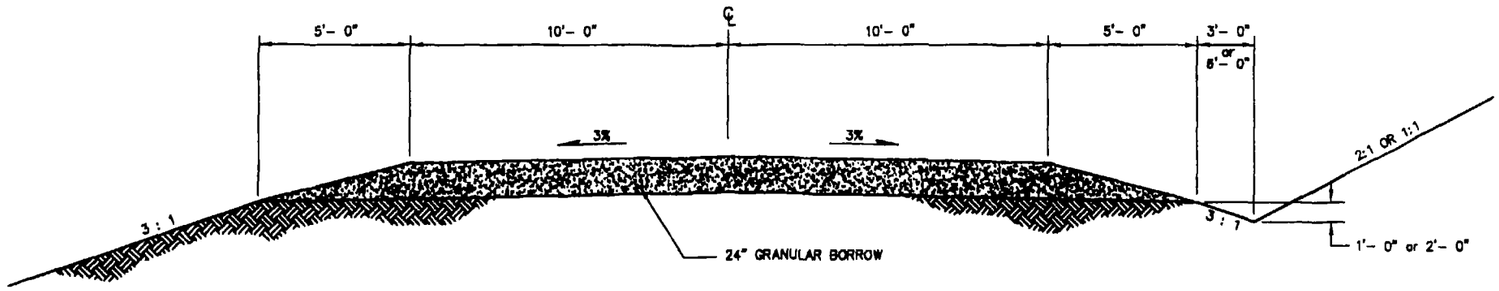

EQUIPMENT ACCESS ROAD "A"

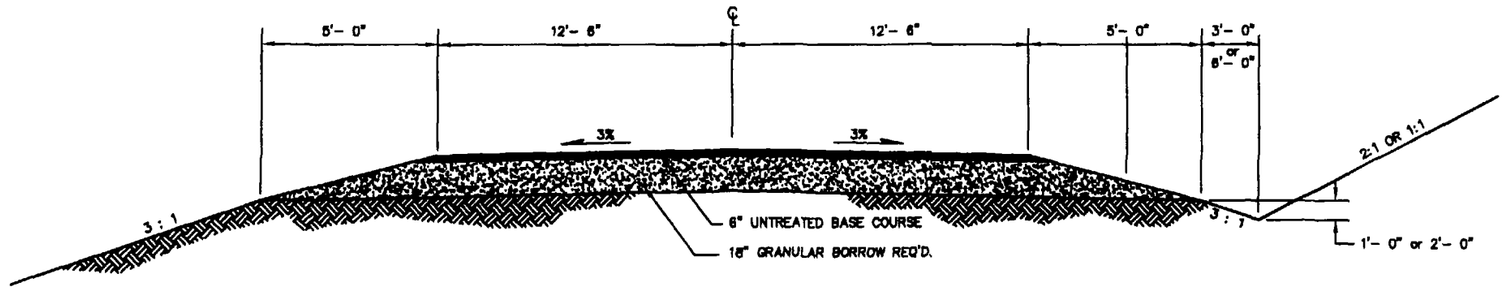

RUBBER TIRE ACCESS ROAD "A"

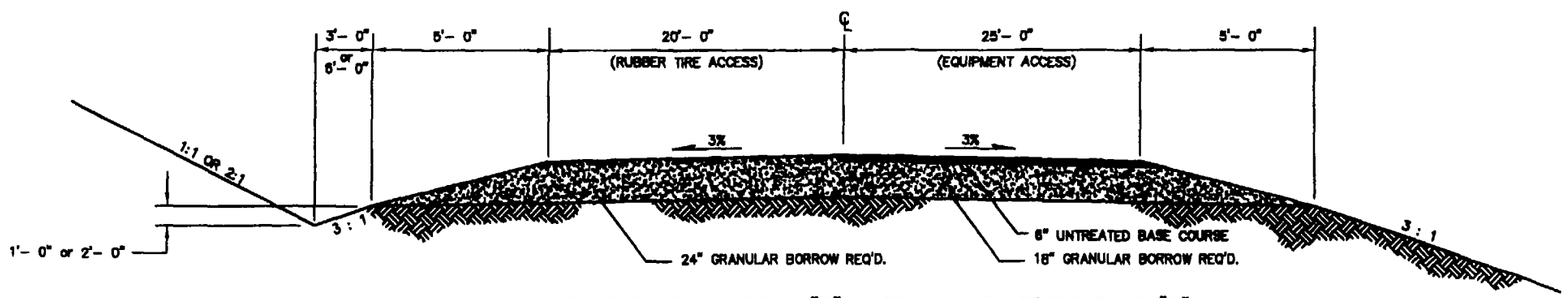

RUBBER TIRE ACCESS ROAD "B" & EQUIPMENT ACCESS ROAD "B"

TYPICAL ROADWAY SECTIONS

Jones & DeMille Engineering
1535 South 100 West – Richfield, Utah 84701
Phone (435) 896-8266
Fax (435) 896-8268
www.jonesanddemille.com

Sage Flat Landfill
Typical Sections

ENGINEER	DRAWN	SHEET NO.
J.F.S.	L.G.	10
CHECKED: J.F.S.	PROJ#: 0406-137 DWG.NM: typ&det	
SCALE: none	DATE: 08/11/04	

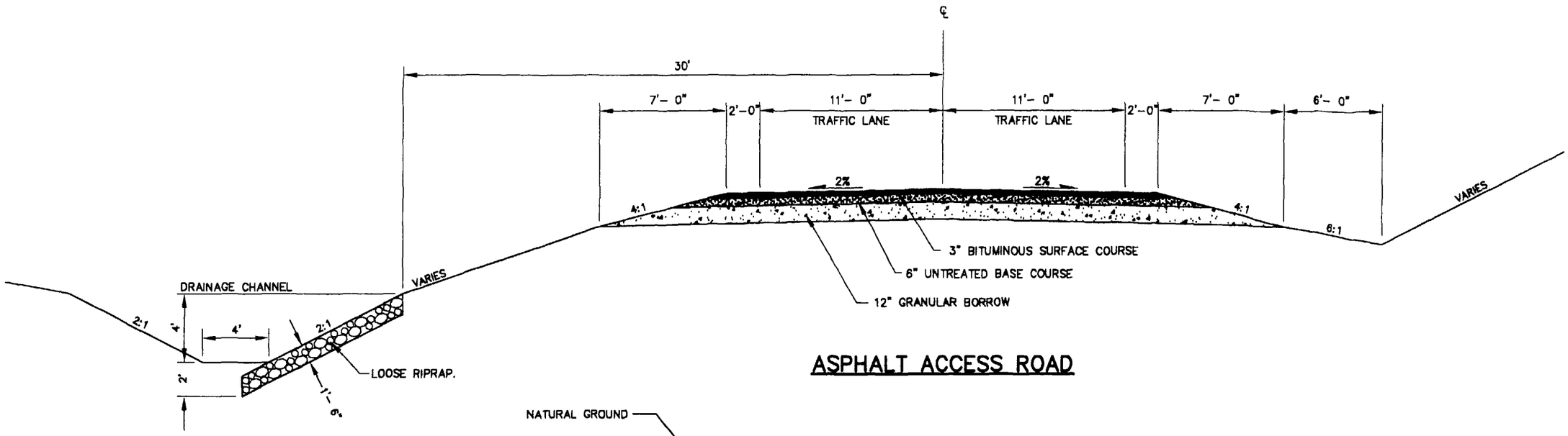

ASPHALT ACCESS ROAD

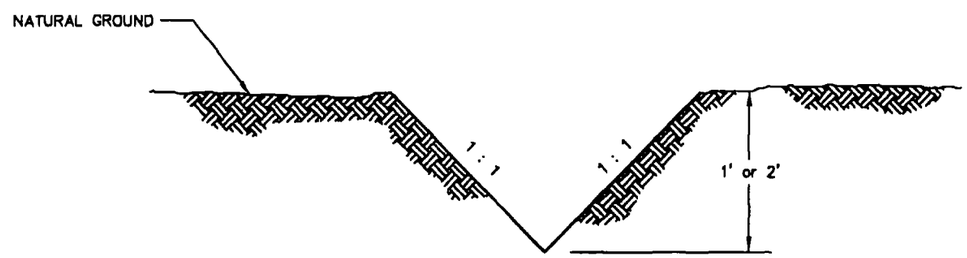

SURFACE DITCH – TYPICAL SECTION

TYPE "A" – 1' DEPTH
TYPE "B" – 2' DEPTH

NOTE: DITCH LINED WITH 12" DEPTH LOOSE RIP RAP WHERE INDICATED ON PLANS.

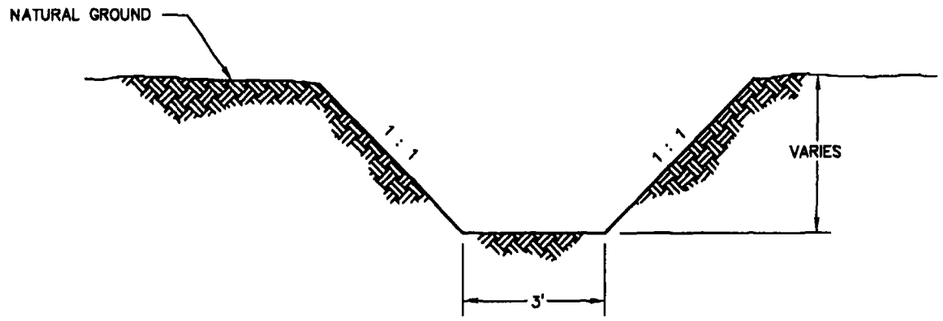

SMALL DITCH – TYPICAL SECTION

NOTE: DITCH LINED WITH 12" DEPTH LOOSE RIP RAP WHERE INDICATED ON PLANS.

Jones & DeMille Engineering
1535 South 100 West – Richfield, Utah 84701
Phone (435) 896–8266
Fax (435) 896–8268
www.jonesanddemille.com

Sage Flat Landfill
Typical Sections

ENGINEER	DRAWN	SHEET NO.
J.F.S.	L.G.	11
CHECKED: J.F.S.	PROJ#: D406–137 DWG.NM: typ&det	
SCALE: none	DATE: 08/11/04	

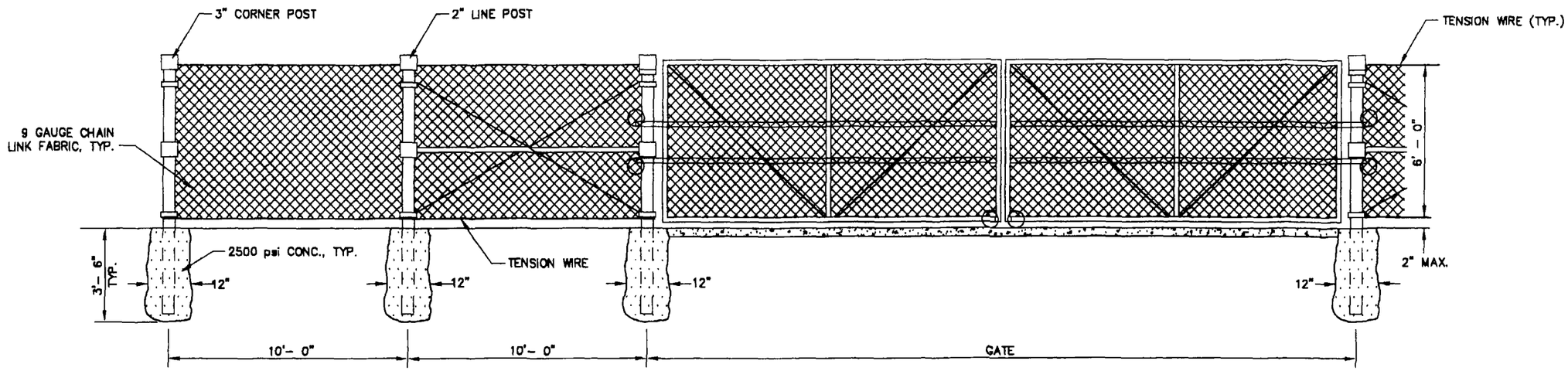

CHAIN LINK FENCE AND GATE DETAIL

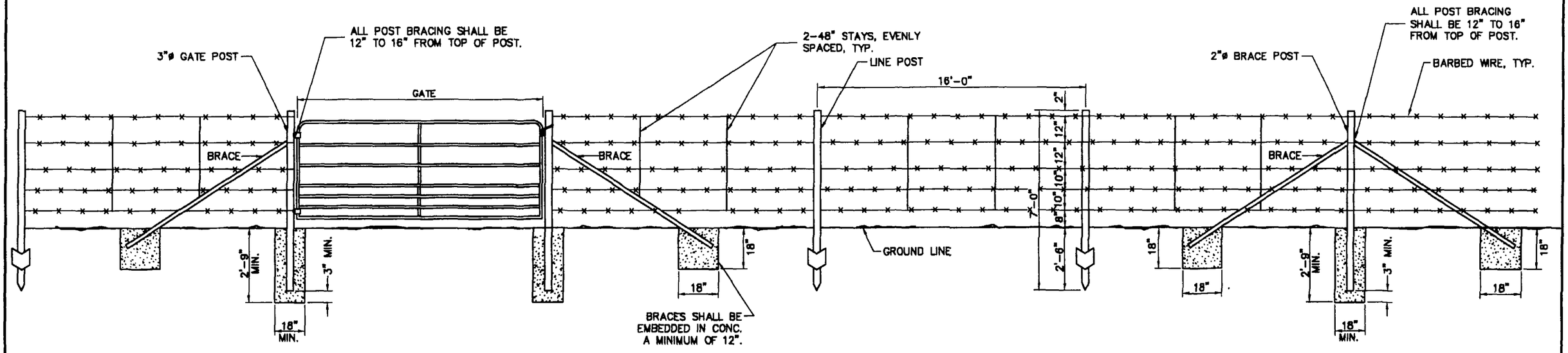

RIGHT-OF-WAY FENCE & GATE DETAILS

Jones & DeMille Engineering
1535 South 100 West - Richfield, Utah 84701
Phone (435) 896-8266
Fax (435) 896-8268
www.jonesanddemille.com

Sage Flat Landfill
Fence Details

ENGINEER	DRAWN	SHEET NO.
J.F.S.	L.G.	12
CHECKED: J.F.S.	PROJ#: 0406-137 DWG.NM: typ&det	
SCALE: none	DATE: 08/11/04	