ATTACHMENT II-11

FACILITY DRAWINGS

The following facility drawings show the location and layout of waste management units permitted for storage, treatment and disposal at the Permittee's Facility:

GENERAL:

DRAWING NO.	TITLE	REVISION	DATE
0801-G01	Property with Rail Lines	4	November 19, 2013
0801-G02	Topography of Permitted Area	7	October 27, 2017
0801-G03	Facility Layout and Structures	8	November 16, 2017
0801-G04	Restricted Access Area	7	October 27, 2017
0801-G05	Section and Property Map	2	February 26, 2010
07007-J01	Environmental Monitors	9	December 29, 2014
07007-J02	Groundwater Monitoring Wells	3	March 2, 2011

The drawings listed above shall be updated annually and submitted to the Director on or before December 1.

MIXED WASTE LANDFILL CELL:

DRAWING NO.	TITLE	REVISION	DATE
11009-G01	Title Sheet	0	June 17, 2011
11009-L01	Facility and Embankment Layout	0	June 17, 2011
11009-C01	Embankment Liner Layout	0	June 17, 2011
11009-C02	Liner Sections & Details	0	June 17, 2011
11009-C03	Liner Sections & Details	0	June 17, 2011
11009-C04	Liner Sections & Details	0	June 17, 2011
11009-C05	Liner Sections & Details	0	June 17, 2011
11009-C06	Liner Sections & Details	0	June 17, 2011
11009-U01	Embankment Location Map & Buffer Zone	0	June 17, 2011

MIXED WASTE LANDFILL CELL COVER:

DRAWING NO.	TITLE	REVISION	DATE
11009-W01	Embankment Waste Surface Controls	0	June 17, 2011
11009-W02	Temporary Cover Surface & Closure Ditch Controls	2	April 24, 2014
11009-W03	Waste & Final Cover – Cross Sections	1	February 18, 2014
11009-W04	Waste & Final Cover – Sections & Details	2	April 24, 2014
11009-W05	Waste & Final Cover – Sections & Details	1	February 18, 2014
11009-W06	Waste & Final Cover – Sections & Details	2	February 18, 2014
11009-W07	Operational (Temporary) Ditch Plan	3	April 24, 2014
11009-W08	Operational (Temporary) Ditch Sections & Details	3	April 24, 2014
11009-W09	Operational (Temp) Connector Ditch Sections & Details	0	June 17, 2011

MIXED WASTE STORAGE BUILDING:

DRAWING NO.	TITLE	REVISION	DATE
9517-1	Building and Wash Pad Layout	E	February 26, 2010
9517-2	Secondary Containment	C	November 5, 2002
9517-3	Wash Pad Details	C	November 5, 2002

MIXED WASTE TREATMENT BUILDING:

DRAWING NO.	TITLE	REVISION	DATE
9317-M2	Dust Collection and Pneumatic Conveying Ducting	12	August 25, 2015
9317-FS1	Stabilization Process Flow Chart	2	October 4, 2012
9317-PP01	Process Piping Layout	4	February 26, 2010
9317-L102	Building Plan	9	February 2, 2005
9317-L103	Building Sections	9	February 2, 2005

MIXED WASTE OPERATIONS BUILDING:

DRAWING NO.	TITLE	REVISION	DATE
0254-A01	Floor Plan and Layout	A	November 5, 2002
0254-A02	Office/Lab Area/ Change Area	0	February 8, 2005
0254-A03	Building Sections	A	November 5, 2002
0254-P01	Plumbing Plan	0	February 8, 2005
0254-M01	HVAC Plan	B	February 26, 2010
0254-M02	HVAC Plan	A	November 5, 2002

MIXED WASTE SURFACE IMPOUNDMENT:

DRAWING NO.	TITLE	REVISION	DATE
11014-L1	Facility Plan View	3	February 4, 2013
11014-L2	Impoundment Area Plan View	3	February 4, 2013
11014-C1	Pond Plan View with Sedimentation Basin	5	February 4, 2013
11014-C2	Berm and Anchor Trench Detail	3	February 4, 2013
11014-C3	Sedimentation Basin Cross Section	3	February 4, 2013
11014-C4	Withdrawal Pipe Cover	2	February 4, 2013
11014-C5	Leak Detection and Evaporation System Plan View and Detail	3	February 4, 2013
11014-C6	Leak Detection and Evaporation System Plan View and Detail	3	February 4, 2013
11014-C7	Sedimentation Basin Detail and Cross Section	4	February 4, 2013

END OF ATTACHMENT II-11

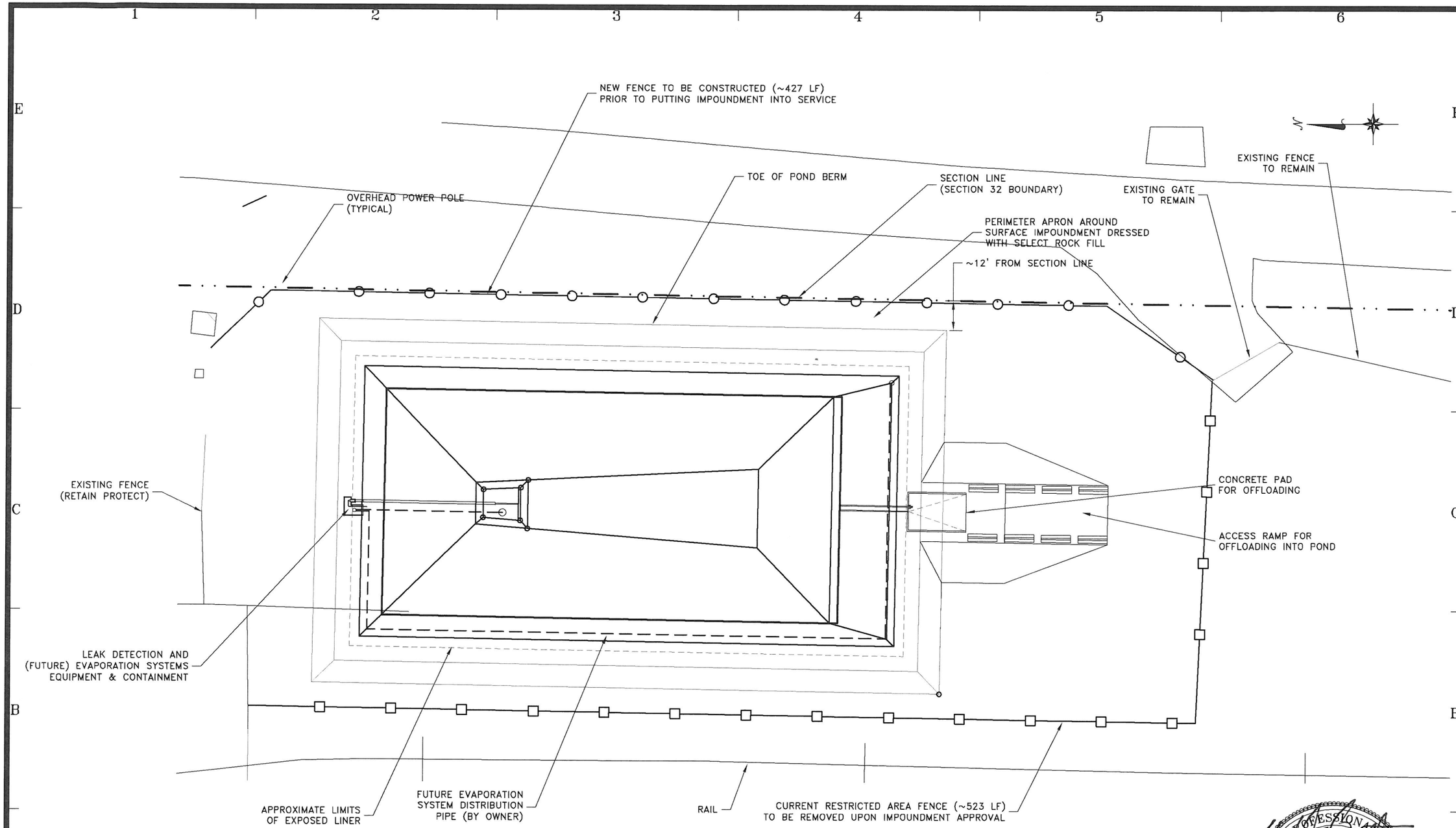

IMPOUNDMENT AREA PLAN VIEW

20 0 20 40

NOTES:

1. OWNER WILL SURVEY AND STAKE THE LOCATION OF THE POND INITIALLY, AND WILL PROVIDE CONTROL COORDINATES TO THE CONTRACTOR.

LICENSED PROFESSIONAL ENGINEER
No. 189500
DAVID F BOOTH
2/4/13
STATE OF UTAH

DATE	BY	DESCRIPTION OF CHANGE
2/4/13	QD	AS-BUILT CONDITIONS
6/29/12	DFB	DESIGN CHANGE: REMOVED SEDIMENTATION BASIN
5/16/12	DFB	FOR CONSTRUCTION
11/17/11	DFB	FOR PERMITTING

ENERGYSOLUTIONS

ENERGYSOLUTIONS "CLIVE" FACILITY
MIXED WASTE FACILITY: SURFACE IMPOUNDMENT
SITE PLAN
CLIVE, UTAH

DRAFTED BY: D. BOOTH
REVIEWED BY: V. ROGERS
APPROVED BY: D. BOOTH
SCALE: AS NOTED | DATE: 11/15/11 | REV.
DRAWING NO.: 11014 L2

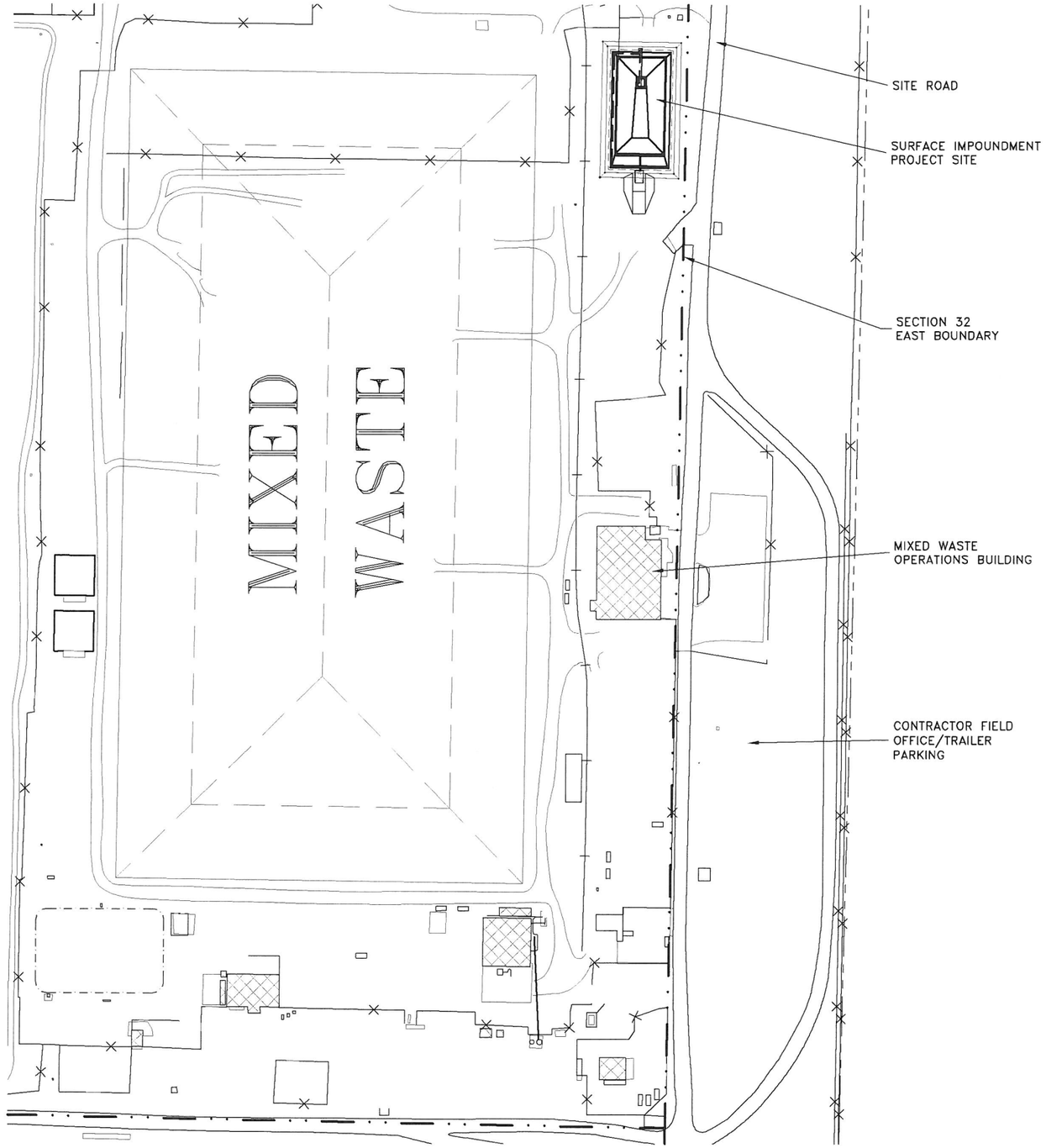

FACILITY PLAN VIEW

120 0 120 240

N

DATE	BY	DESCRIPTION OF CHANGE
2/4/13	GDD	AS BUILT CONDITIONS
6/29/12	DFB	DESIGN CHANGE: REMOVED SEDIMENTATION BASIN
5/16/12	DFB	FOR CONSTRUCTION
12/30/11	DFB	FOR PERMITTING

ENERGYSOLUTIONS

ENERGYSOLUTIONS "CLIVE" FACILITY
MIXED WASTE FACILITY: SURFACE IMPOUNDMENT
SITE PLAN: SURFACE IMPOUNDMENT LOCATION
CLIVE, UTAH

LICENSED PROFESSIONAL ENGINEER
No. 189500
DAVID F BOOTH
2/4/13
STATE OF UTAH

DRAFTED BY: D. BOOTH
REVIEWED BY: V. ROGERS
APPROVED BY: D. BOOTH
SCALE: AS NOTED
DATE: 11/15/11
REV.
DRAWING NO.: 11014 L1

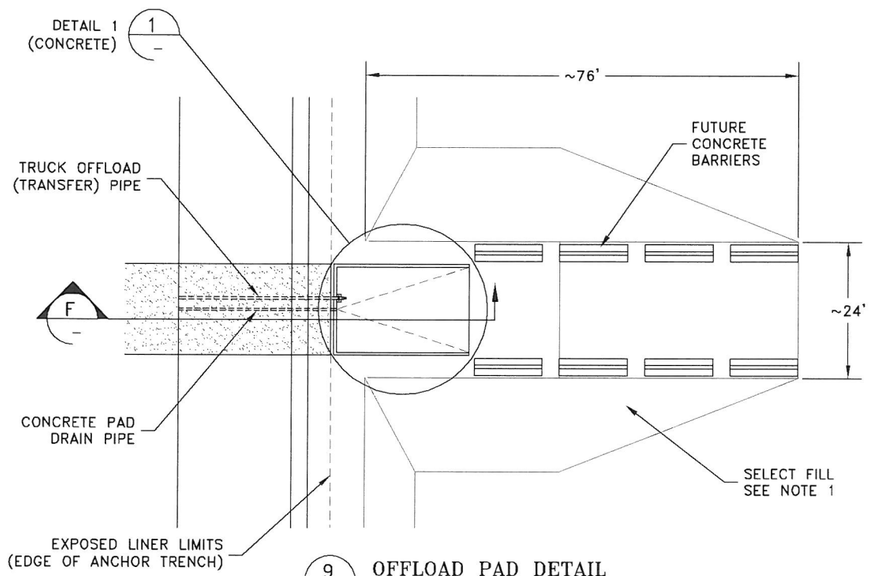

9 / C1 OFFLOAD PAD DETAIL
NOT TO SCALE

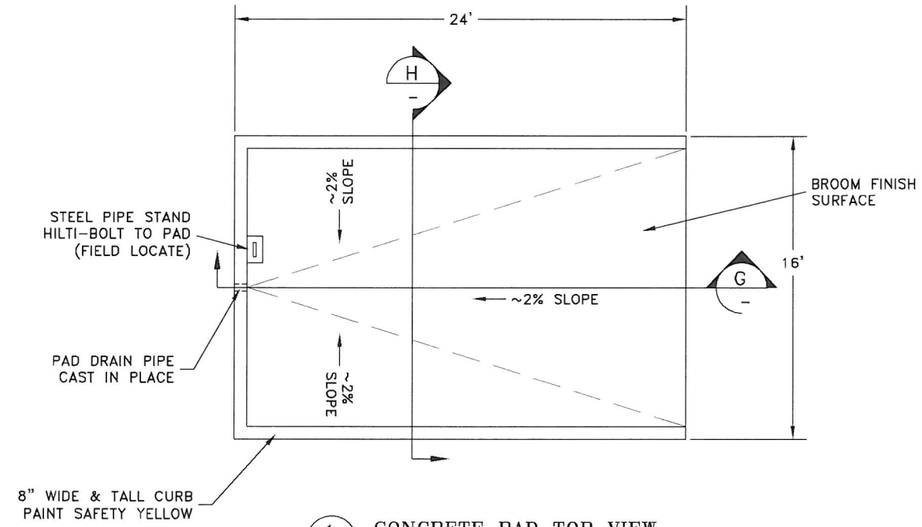

1 CONCRETE PAD TOP VIEW
NOT TO SCALE

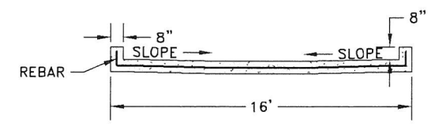

H CONCRETE PAD CROSS SECTION
NOT TO SCALE

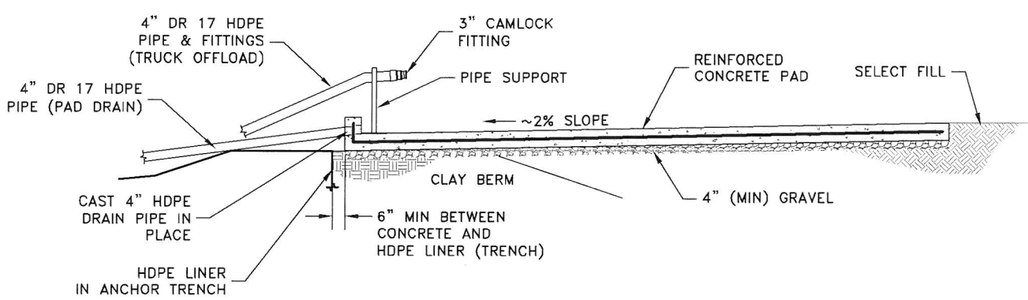

F OFFLOAD PAD CROSS SECTION
NOT TO SCALE

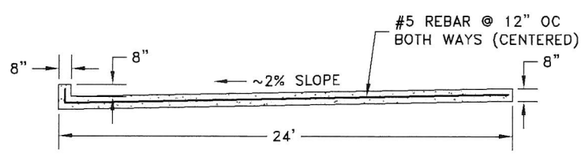

G CONCRETE PAD CROSS SECTION
NOT TO SCALE

NOTES:

1. EARTH RAMP FOR CONCRETE PAD IS CONSTRUCTED WITH SELECT FILL MATERIAL. PLACED IN 12" LIFTS AND COMPACTED TO AT LEAST 95% OF A STANDARD PROCTOR.

2. CONCRETE PAD SLOPED TO DRAIN TO PIPE. PIPE IS EMBEDDED IN CONCRETE WITH A EMBED RING OR EQUIVALENT.

CONCRETE:
f'c = 4,000 PSI
REINFORCEMENT: #5 REBAR, EPOXY COATED; CENTERED IN PAD @ 12" O.C. BOTH WAYS

LICENSED PROFESSIONAL ENGINEER
No. 189500
DAVID F BOOTH
2/4/13
STATE OF UTAH

REV	DATE	BY	DESCRIPTION OF CHANGE
4	2/4/13	GQD	AS BUILT CONDITIONS
3	9/10/12	DFB	ISSUED FOR CONSTRUCTION
2	6/29/12	DFB	DESIGN CHANGE: REMOVED SEDIMENTATION BASIN
1	5/16/12	DFB	FOR CONSTRUCTION BID ONLY
0	11/17/11	DFB	FOR PERMITTING

ENERGYSOLUTIONS

ENERGYSOLUTIONS "CLIVE" FACILITY
MIXED WASTE FACILITY: SURFACE IMPOUNDMENT
OFFLOAD FACILITY PLAN & SECTIONS
CLIVE, UTAH

DRAFTED BY: D. BOOTH
REVIEWED BY: V. ROGERS
APPROVED BY: D. BOOTH
SCALE: AS NOTED | DATE: 11/17/11 | REV: 4
DRAWING NO.: 11014 C7

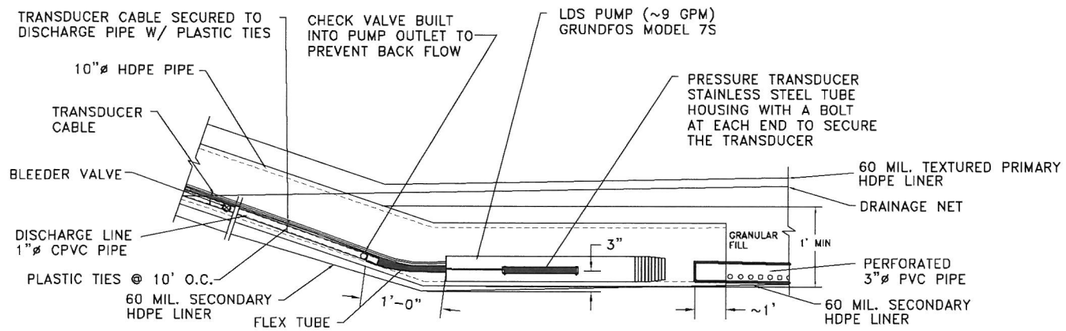

-PRESSURE TRANSDUCER ACTIVATES (@12") & DEACTIVATES (@6") THE PUMP (ABOVE THE LOWER LINER)

-PRESSURE TRANSDUCER IS HOUSED IN A STAINLESS STEEL PIPE CASING

-PRESSURE TRANSDUCER MODEL PS 98i-3C260

H / C4 LDS PUMP DETAIL

NOT TO SCALE

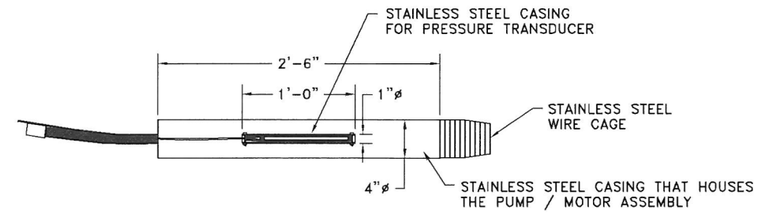

PUMP CASING DETAIL

NOT TO SCALE

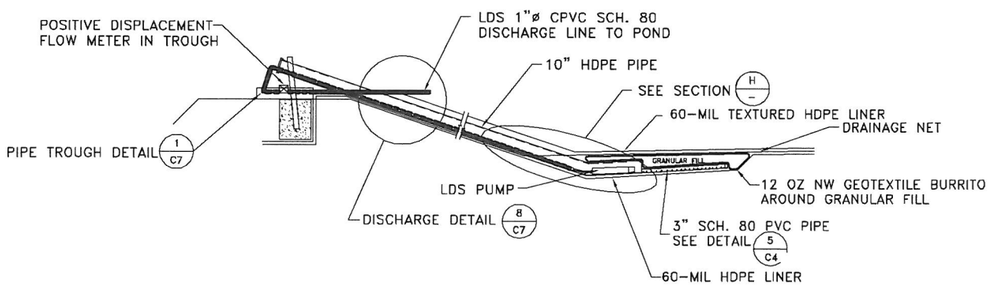

F / C2 SUMP CROSS SECTION

NOT TO SCALE

LEAK DETECTION SYSTEM (LDS)

1. ALLOWABLE LEAK RATE FOR 60 MIL. TEXTURED PRIMARY HDPE LINER = 120 GALLONS/DAY. REFER TO ENGINEERING DESIGN REPORT FOR DETAILED CALCULATIONS AND REFERENCES.

2. LDS INCLUDES A PUMP WITH FLOW METER

-THE PUMP IS PLACED IN THE BOTTOM OF THE 10" HDPE PIPE AT THE DOWN SLOPE SIDE OF THE ELBOW.

-THE PUMP HAS A 1"ø DISCHARGE LINE.

-A POSITIVE DISPLACEMENT FLOW METER IS PLACED IN THE HORIZONTAL PORTION OF THE DISCHARGE LINE OUTSIDE THE 10"ø HDPE PIPE. THE HORIZONTAL PORTION OF THE DISCHARGE LINE HAS A SLIGHT SLOPE DOWN TO THE EVAP. POND FOR GRAVITY FLOW AFTER THE PUMP STOPS AND LINE DISCHARGE THROUGH THE CHECK VALVE.

3. LDS INCLUDES A HEAD MONITORING SYSTEM.

-A PRESSURE TRANSDUCER IS USED TO MONITOR HEAD AND ACTIVATE AND DEACTIVATE THE PUMP.

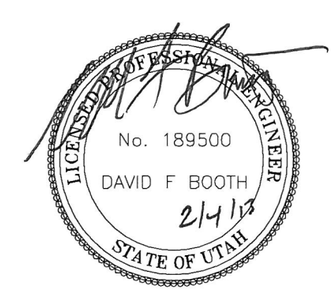

DATE	BY	DESCRIPTION OF CHANGE
2/4/13	GQD	AS BUILT CONDITIONS
5/16/12	DFB	FOR CONSTRUCTION
3/27/12	DFB	FOR PERMITTING: REVISED ALLOWABLE LEAKAGE RATE
11/17/11	DFB	FOR PERMITTING

ENERGYSOLUTIONS

"CLIVE" FACILITY

MIXED WASTE FACILITY: SURFACE IMPOUNDMENT

LEAK DETECTION SYTEM SECTIONS & DETAILS

CLIVE, UTAH

DRAFTED BY: D. BOOTH
REVIEWED BY: V. ROGERS
APPROVED BY: D. BOOTH
SCALE: AS NOTED | DATE: 11/16/11 | REV.
DRAWING NO.: 11014 C6

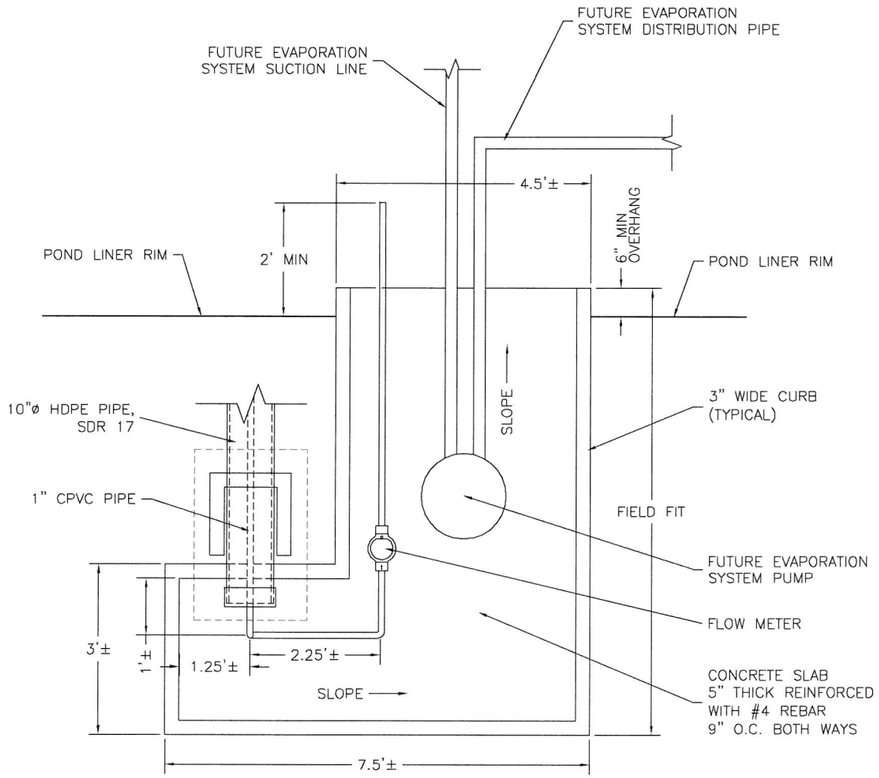

1 / C1 LEAK DETECTION & FUTURE EVAPORATION SYSTEM PLAN VIEW
NOT TO SCALE

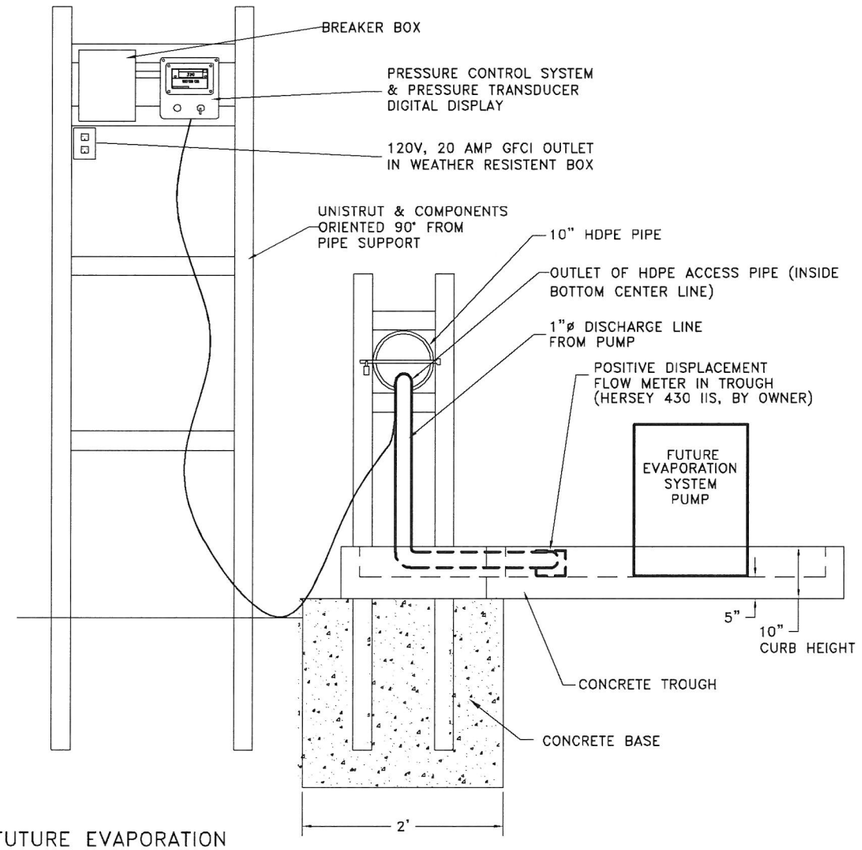

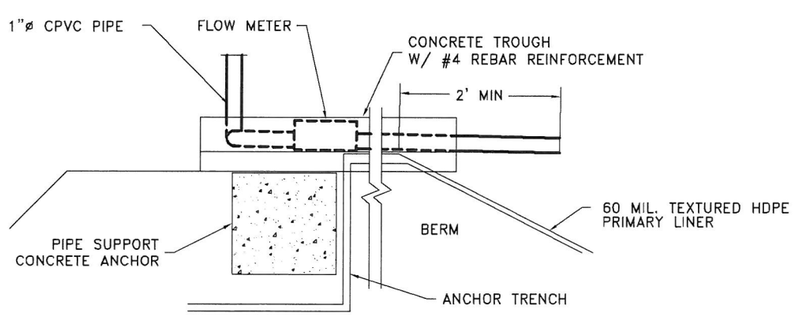

8 / – DISCHARGE DETAIL
NOT TO SCALE

NOTE: FUTURE EVAPORATION SYSTEM NOT SHOWN.

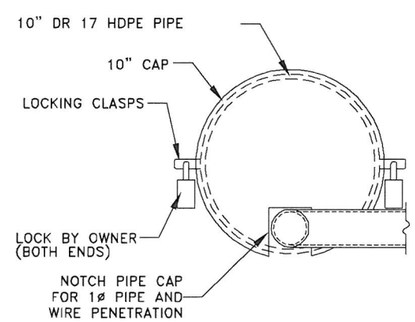

6 / C3 PIPE CAP
NOT TO SCALE

NOTES:

CONCRETE:
f'c = 4,000 PSI
REINFORCEMENT: #4 REBAR @ 9" O.C. BOTH WAYS
PLACE 4" MIN DRAIN ROCK UNDER TROUGH

LICENSED PROFESSIONAL ENGINEER
No. 189500
DAVID F BOOTH
2/4/13
STATE OF UTAH

DATE	BY	DESCRIPTION OF CHANGE
2/4/13	GOD	AS BUILT CONDITIONS
9/10/12	DFB	FOR CONSTRUCTION: CLARIFIED NOTES
5/16/12	DFB	FOR CONSTRUCTION
11/17/11	DFB	FOR PERMITTING

ENERGYSOLUTIONS
"CLIVE" FACILITY
MIXED WASTE FACILITY: SURFACE IMPOUNDMENT
LEAK DETECTION SYTEM SECTIONS & DETAILS
CLIVE, UTAH

DRAFTED BY D. BOOTH
REVIEWED BY V. ROGERS
APPROVED BY D. BOOTH
SCALE AS NOTED DATE 11/16/11 REV. 3
DRAWING NO. 11014 C5

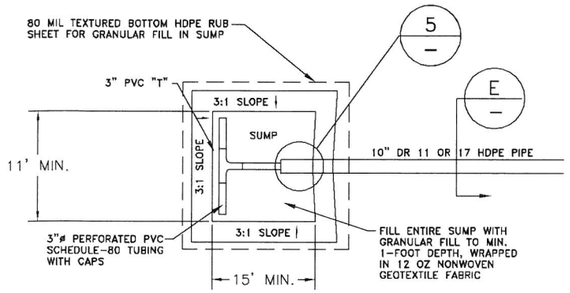

2 / C1 PLAN VIEW – SUMP

NOT TO SCALE

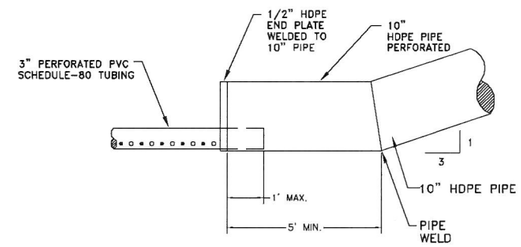

5 / — 3" AND 10" PIPE CONNECTION DETAIL

NOT TO SCALE

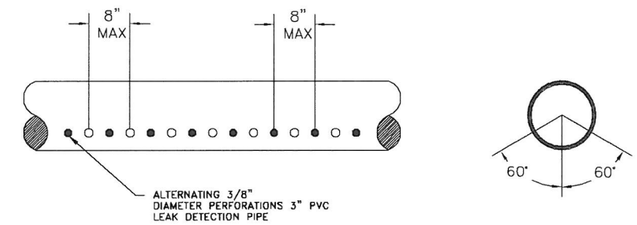

PERFORATIONS DETAILS

NOT TO SCALE

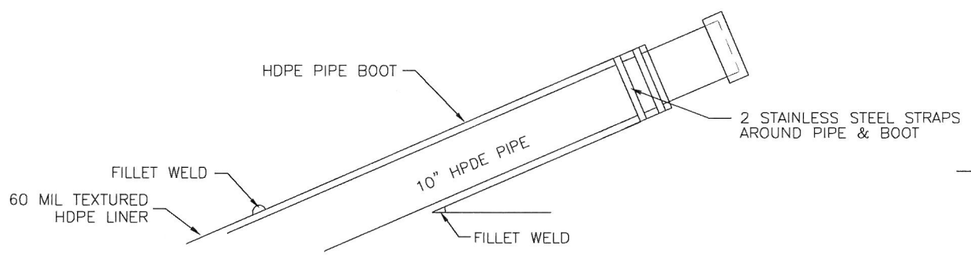

3 / C3 PIPE BOOT DETAIL

NOT TO SCALE

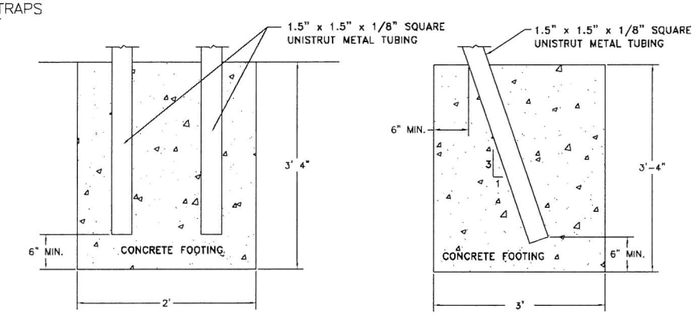

4 / C3 PIPE SUPPORT FOOTING DETAIL

NOT TO SCALE

NOTES:

CONCRETE:
f's = 4,000 PSI
REINFORCEMENT: #4 REBAR
PLACE 4" MIN DRAIN
ROCK UNDER TROUGH

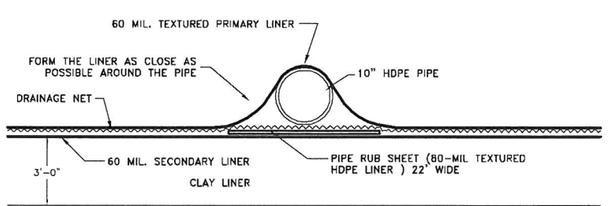

E / — WITHDRAWAL PIPE COVER

NOT TO SCALE

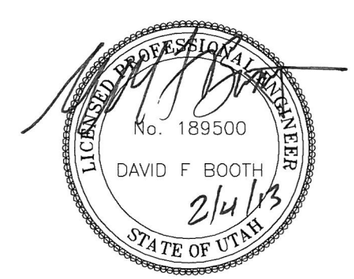

DATE	BY	DESCRIPTION OF CHANGE
2/4/13	GOD	AS-BUILT CONDITIONS
5/16/12	DFB	FOR CONSTRUCTION
11/17/11	DFB	FOR PERMITTING

ENERGYSOLUTIONS

"CLIVE" FACILITY
MIXED WASTE FACILITY: SURFACE IMPOUNDMENT
SUMP PLAN, SECTIONS & DETAILS
CLIVE, UTAH

DRAFTED BY D. BOOTH
REVIEWED BY V. ROGERS
APPROVED BY D. BOOTH
SCALE AS NOTED | DATE 11/16/11 | REV.
DRAWING NO. 11014 C4

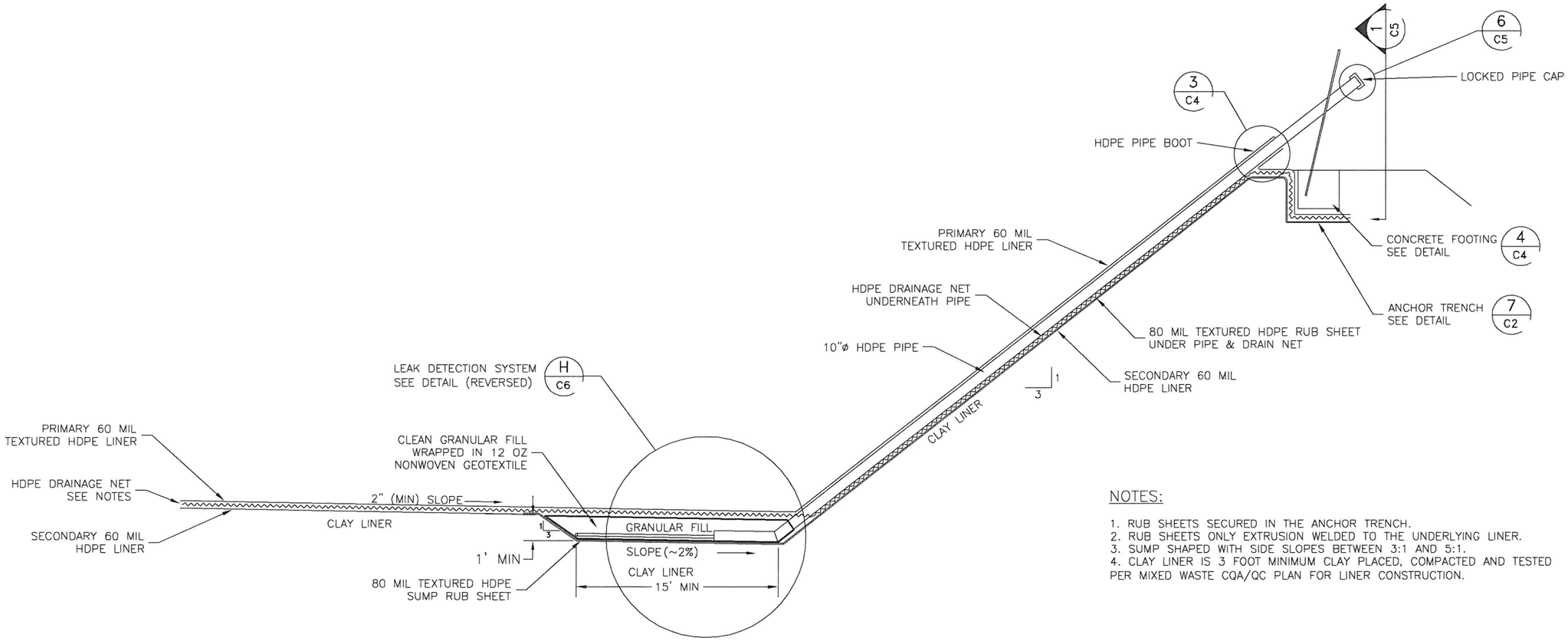

C
C1
SUMP CROSS SECTION
NOT TO SCALE

NOTES:

1. RUB SHEETS SECURED IN THE ANCHOR TRENCH.
2. RUB SHEETS ONLY EXTRUSION WELDED TO THE UNDERLYING LINER.
3. SUMP SHAPED WITH SIDE SLOPES BETWEEN 3:1 AND 5:1.
4. CLAY LINER IS 3 FOOT MINIMUM CLAY PLACED, COMPACTED AND TESTED PER MIXED WASTE CQA/QC PLAN FOR LINER CONSTRUCTION.

LICENSED PROFESSIONAL ENGINEER
No. 189500
DAVID F BOOTH
2/4/13
STATE OF UTAH

DATE	BY	DESCRIPTION OF CHANGE
2/4/13	GCD	AS-BUILT CONDITIONS
6/29/12	DFB	DESIGN CHANGE: REMOVED SEDIMENTATION BASIN (SECTION D)
5/16/12	DFB	FOR CONSTRUCTION
11/17/11	DFB	FOR PERMITTING

ENERGYSOLUTIONS

"CLIVE" FACILITY
MIXED WASTE FACILITY: SURFACE IMPOUNDMENT
SECTIONS AND DETAILS
CLIVE, UTAH

DRAFTED BY D. BOOTH
REVIEWED BY V. ROGERS
APPROVED BY D. BOOTH
SCALE AS NOTED DATE 11/16/11 REV. 3
DRAWING NO. 11014 C3

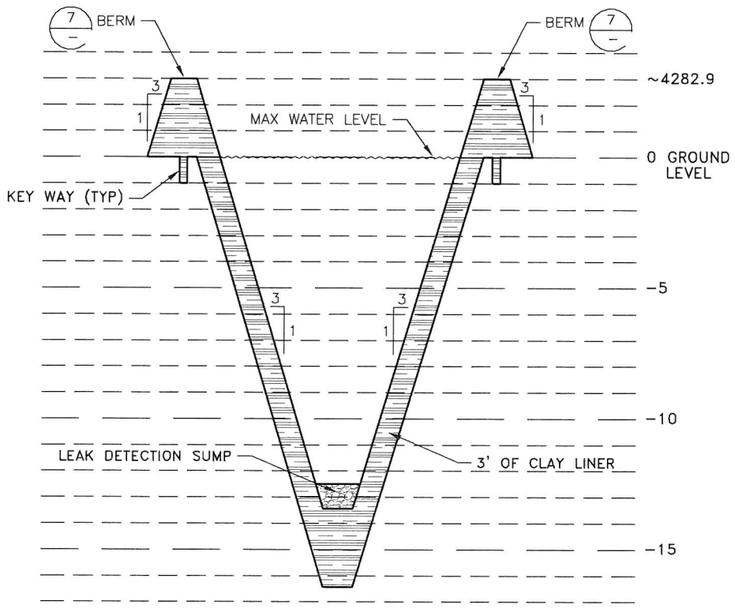

A C1 WEST-EAST CROSS SECTION
SCALE: 1 HORIZONTAL TO 10 VERTICAL

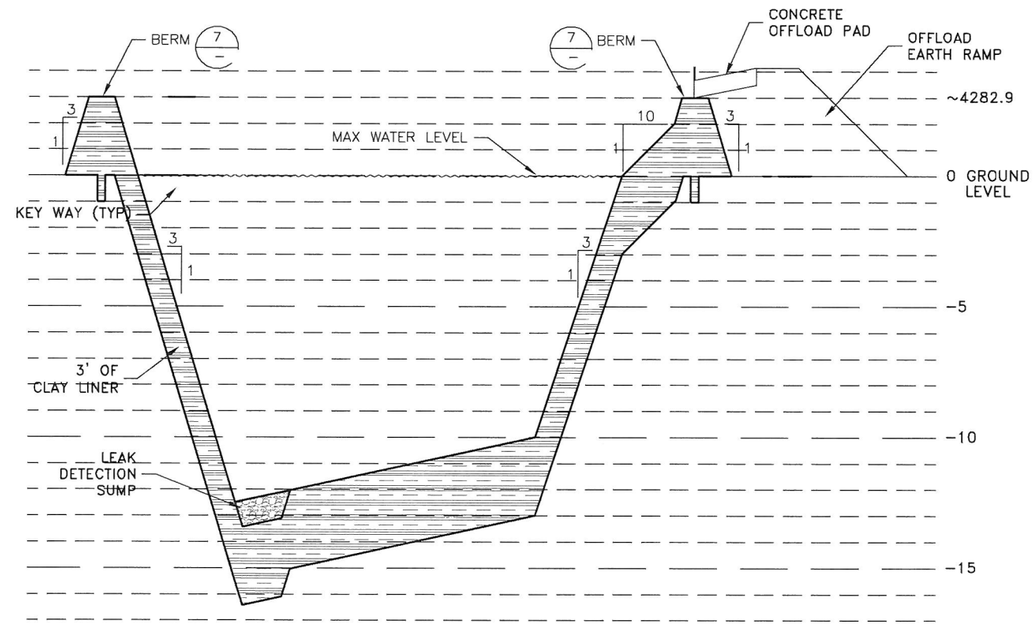

B C1 NORTH-SOUTH CROSS SECTION
SCALE: 1 HORIZONTAL TO 10 VERTICAL

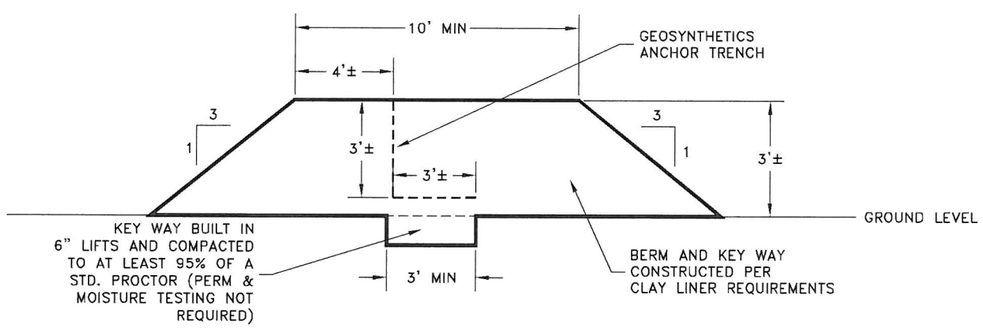

7 BERM & ANCHOR TRENCH DETAIL
SCALE: NTS

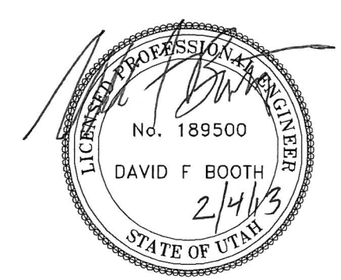

DATE	BY	DESCRIPTION OF CHANGE
2/4/13	GQD	AS BUILT CONDITIONS
6/29/12	DFB	DESIGN CHANGE: REMOVED SEDIMENTATION BASIN
5/16/12	DFB	FOR CONSTRUCTION
11/17/11	DFB	FOR PERMITTING

ENERGYSOLUTIONS

ENERGYSOLUTIONS "CLIVE" FACILITY
MIXED WASTE FACILITY: SURFACE IMPOUNDMENT
SECTIONS AND DETAILS
CLIVE, UTAH

DRAFTED BY: D. BOOTH
REVIEWED BY: V. ROGERS
APPROVED BY: D. BOOTH
SCALE: AS NOTED | DATE: 11/15/11 | REV: 3
DRAWING NO.: 11014 C2

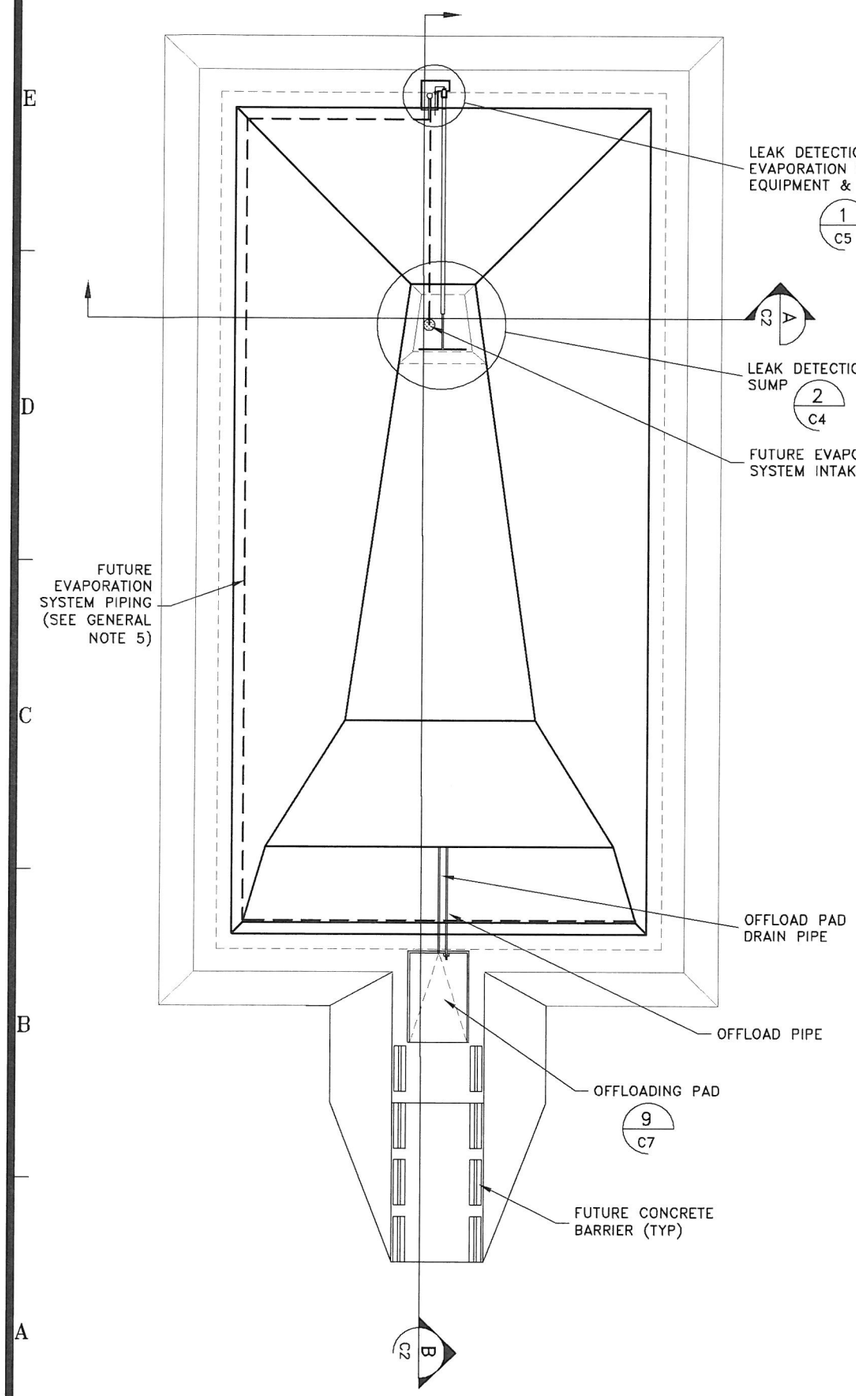

POND PLAN VIEW WITH OFFLOAD FACILITY

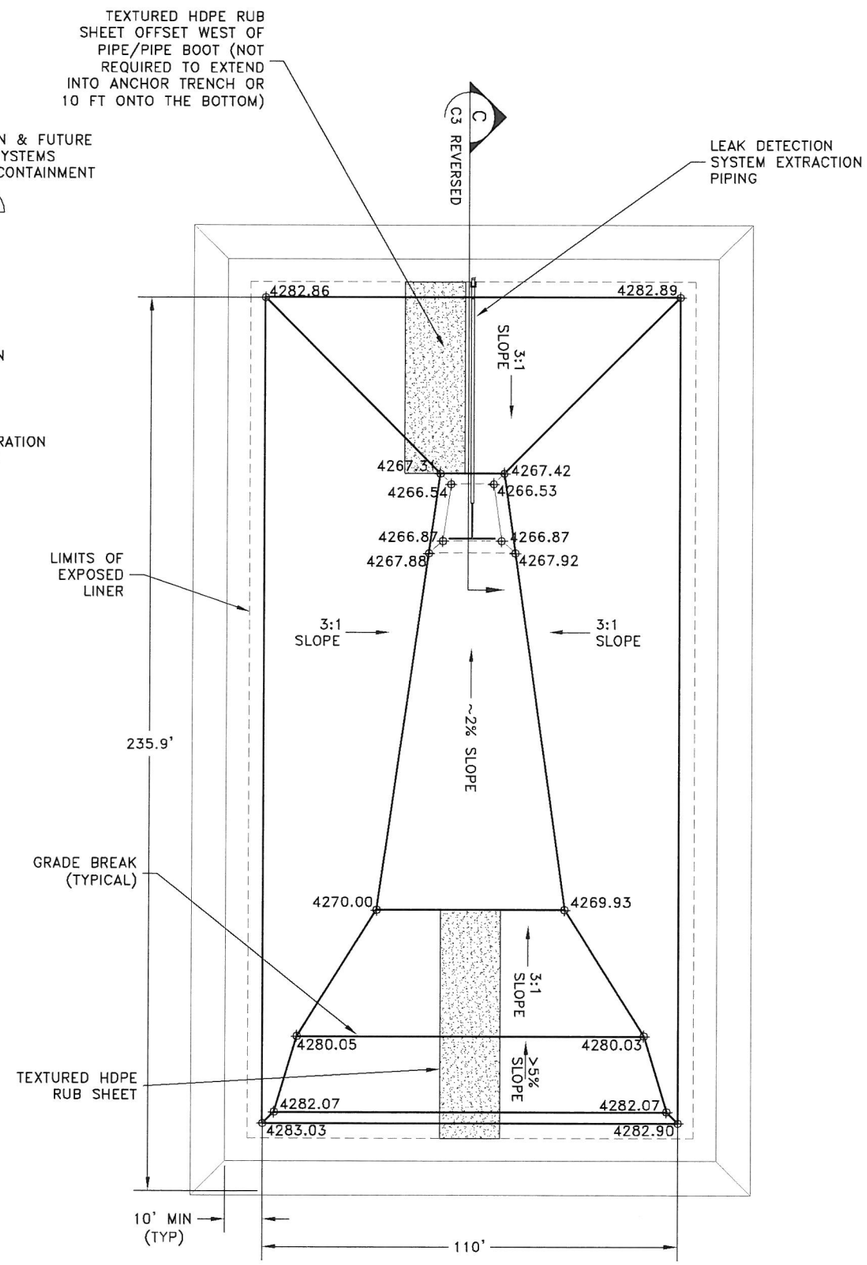

POND PLAN VIEW LINER ONLY

GENERAL NOTES:

1. APPROXIMATE POND CAPACITY IS 850,000 GALS AT MAX LEVEL WITH 3' OF FREEBOARD.
2. MAX (WITH 3' FREEBOARD) WATER SURFACE AREA = 17,112 FT^2 (0.4 ACRES).
3. ALL MATERIALS AND CONSTRUCTION METHODS ARE IN ACCORDANCE WITH THE CURRENT MIXED WASTE CQA/QC PLAN.
4. RUB SHEETS FOR EMERGENCY EGRESS TO BE 80 MIL TEXTURED HDPE. EXTRUSION WELD ONLY THE SIDES. EXTEND RUB SHEETS ~10 FEET ONTO THE POND BOTTOM AND INTO THE ANCHOR TRENCH, UNLESS NOTED OTHERWISE.
5. FUTURE EVAPORATION SYSTEM PUMPS WATER FROM THE IMPOUNDMENT AND DRIZZLES IT ACROSS THE LINER TO ENHANCE EVAPORATION (BY OWNER).

EARTHWORK CONSTRUCTION SPECIFICATIONS:

1. STRIPPED UPPER 6" OF BERM FOOTPRINT, SCARIFY TO A DEPTH OF 8", MOISTURE CONDITIONED TO WITHIN 2% OF OPTIMUM, AND COMPACTED TO AT LEAST 95% OF STANDARD DRY DENSITY, ASTM D 698.
2. BERMS AND CLAY LINER WERE CONSTRUCTED IN ACCORDANCE WITH THE CURRENT MIXED WASTE CQA/QC PLAN.
3. FINAL GRADING OF THE POND BOTTOM, THE LEAK DETECTION SUMP AND KEY CONTROL POINTS WERE WITHIN ±0.1 FT OF THE DESIGN ELEVATION MEASURED ON A MAXIMUM 50 FT AND AT KEY CONTROL POINTS.
4. ELEVATIONS SHOWN ARE FOR TOP OF APPROVED CLAY LINER.

20 0 20 40

LICENSED PROFESSIONAL ENGINEER
No. 189500
DAVID F BOOTH
2/4/13
STATE OF UTAH

DATE	BY	DESCRIPTION OF CHANGE
2/4/13	CGD	AS-BUILT CONDITIONS
10/22/12	DFB	MINOR FIELD CHANGE: NORTH RUB SHEET
6/29/12	DFB	DESIGN CHANGE: REMOVED SEDIMENTATION BASIN
5/16/12	DFB	FOR CONSTRUCTION
3/27/12	DFB	FOR PERMITTING: DELETED DUPLICATED ALLOWABLE LEAKAGE STATEMENT (SEE C06)
11/17/11	DFB	FOR PERMITTING

ENERGYSOLUTIONS

ENERGYSOLUTIONS "CLIVE" FACILITY
MIXED WASTE FACILITY: SURFACE IMPOUNDMENT
PLAN VIEW
CLIVE, UTAH

DRAFTED BY D. BOOTH
REVIEWED BY V. ROGERS
APPROVED BY D. BOOTH
SCALE AS NOTED | DATE 11/15/11 | REV. 3
DRAWING NO. 11014 C1

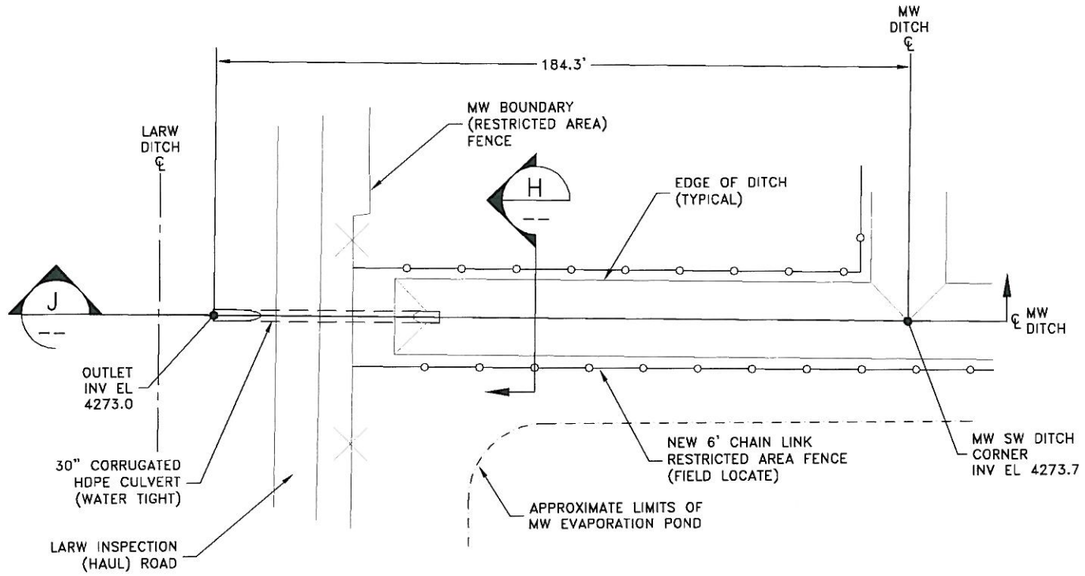

12 W07 DITCH CONNECTION PLAN
SCALE: 1" = 40'

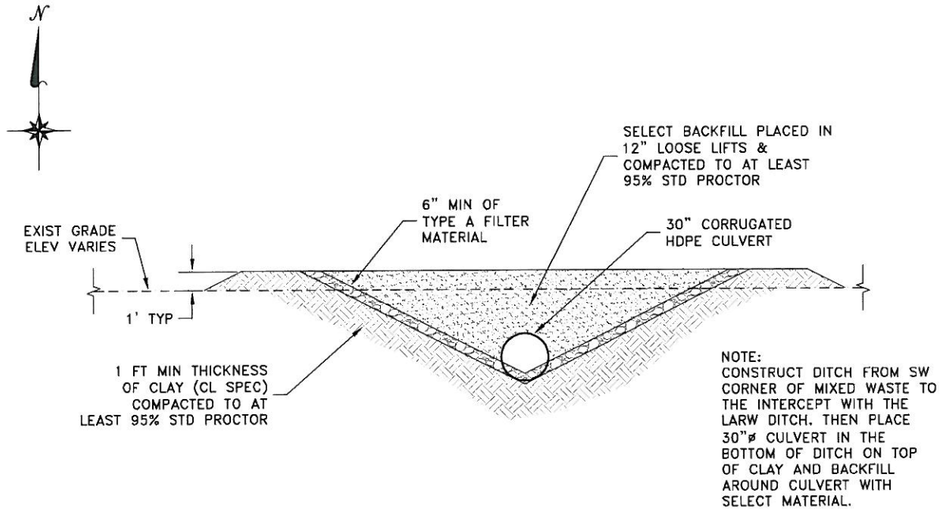

H CONNECTOR DITCH SECTION
SCALE: 1" = 8'

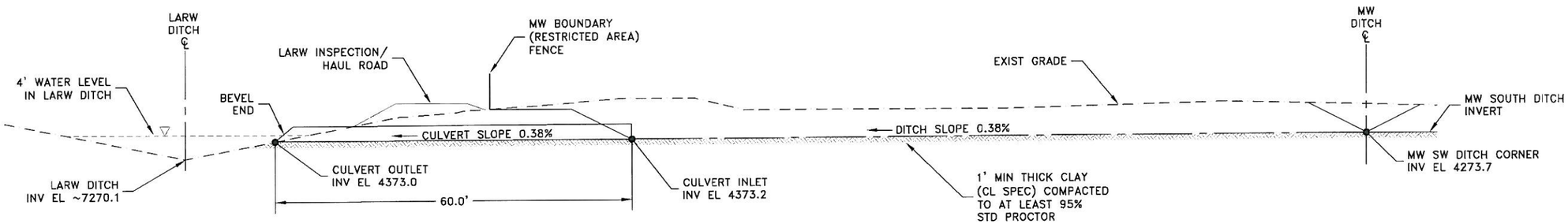

J CONNECTOR DITCH SECTION
SCALE: 1" = 20'

LICENSED PROFESSIONAL ENGINEER
No. 189500
DAVID F BOOTH
6/17/11
STATE OF UTAH

DATE	BY	DESCRIPTION OF CHANGE
6/17/11	DFB	FOR LICENSE AMENDMENT

ENERGYSOLUTIONS

ENERGYSOLUTIONS "CLIVE" FACILITY
MIXED WASTE EMBANKMENT
OPERATIONAL (TEMP) CONNECTOR DITCH SECTIONS & DETAILS
CLIVE, UTAH

FINAL DRAWING

DRAFTED BY D. BOOTH
REVIEWED BY G. DUTSON
APPROVED BY D. BOOTH
SCALE AS NOTED DATE 06/17/11 REV.
DRAWING NO. 11009 W09

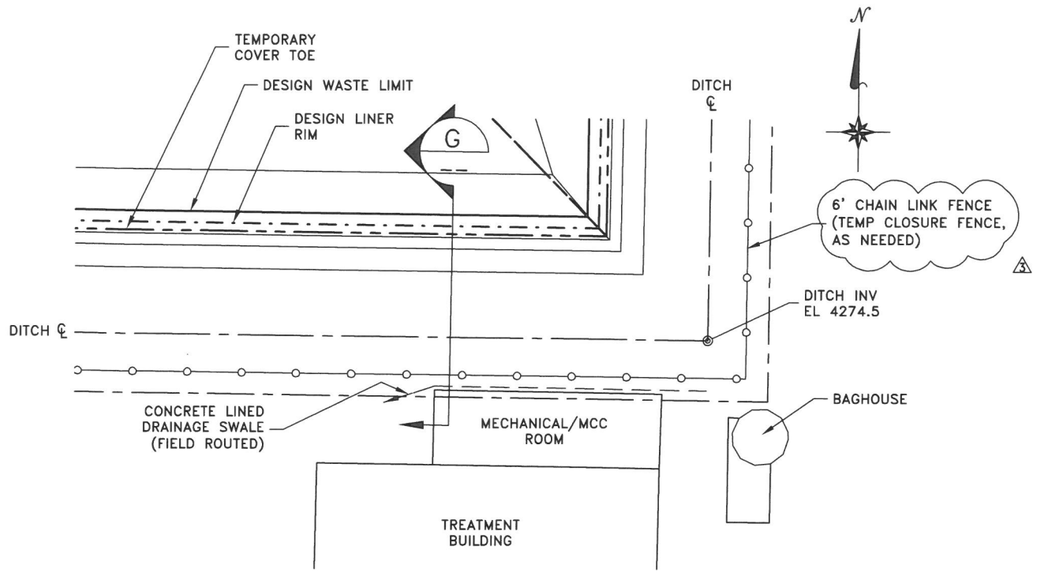

10 W07 DITCH–TREATMENT BUILDING DETAIL
SCALE: 1" = 40'

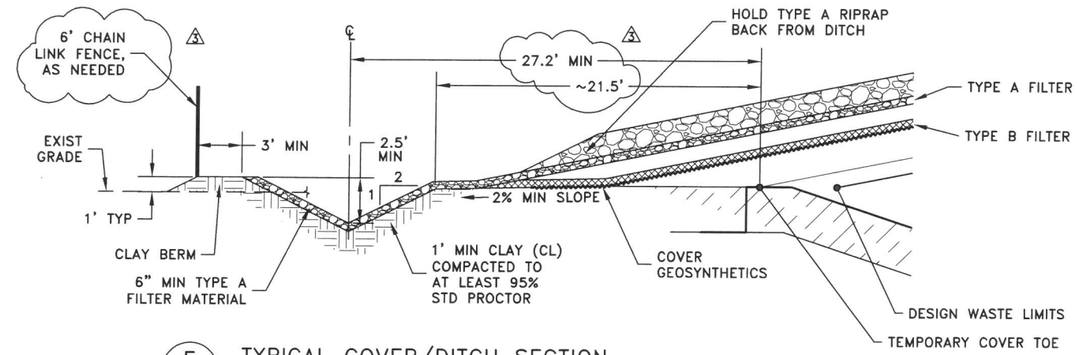

E W07 TYPICAL COVER/DITCH SECTION
SCALE: 1" = 10'

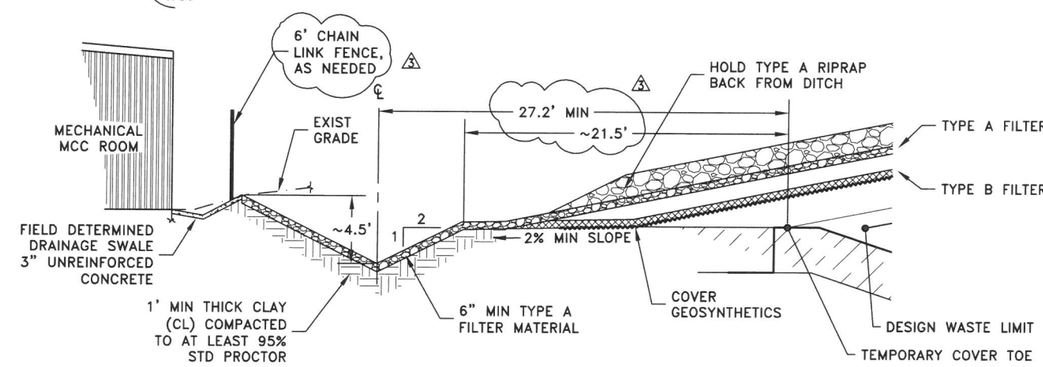

G -- DITCH–TREATMENT BUILDING SECTION
SCALE: 1" = 10'

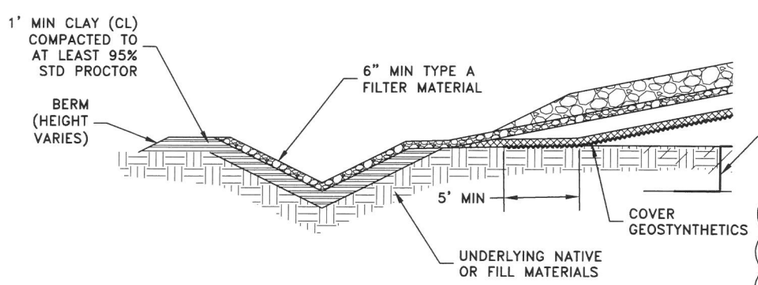

ADDITIONAL DITCH CONSTRUCTION DETAILS
(TYPICAL OF PERIMETER & CONNECTOR DITCHES)

DITCH NOTES:

1. CLAY LAYER UNDER DITCH IS NATIVE CLAY BORROW (DOES NOT REQUIRE DEFLOCCULANT).
2. CLAY LAYER UNDER DITCH DOES NOT HAVE A PERMEABILITY REQUIREMENT, DENSITY ONLY. PERFORM DENSITY TESTING AT SAME FREQUENCY AS CLAY LINER.
3. UNDERLYING NATIVE OR FILL MATERIALS SHALL BE COMPACTED WITH A MINIMUM OF 4 PASSES WITH A SMOOTH DRUM VIBRATORY COMPACTOR.

3

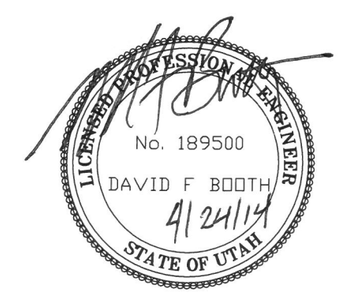

3	3/17/14	DFB	REVISED DITCH FOUNDATION SPECIFICAITONS & TEMPORARY FENCE REQUIREMENT
2	2/18/14	DFB	DESIGN CHANGE–ELIMINATED COVER GEOSYNTHETICS ANCHOR TRENCH
1	10/4/12	DFB	REMOVED DETAILS 11 AND F; ADDED ADDITIONAL DITCH CONSTRUCTION DETAILS
0	6/17/11	DFB	FOR LICENSE AMENDMENT
Δ	DATE	BY	DESCRIPTION OF CHANGE

ENERGYSOLUTIONS

ENERGYSOLUTIONS "CLIVE" FACILITY
MIXED WASTE EMBANKMENT
OPERATIONAL (TEMPORARY) DITCH SECTIONS & DETAILS
CLIVE, UTAH

FINAL DRAWING

DRAFTED BY D. BOOTH
REVIEWED BY G. DUTSON
APPROVED BY D. BOOTH
SCALE AS NOTED | DATE 06/17/11 | REV. 3
DRAWING NO. 11009 W08

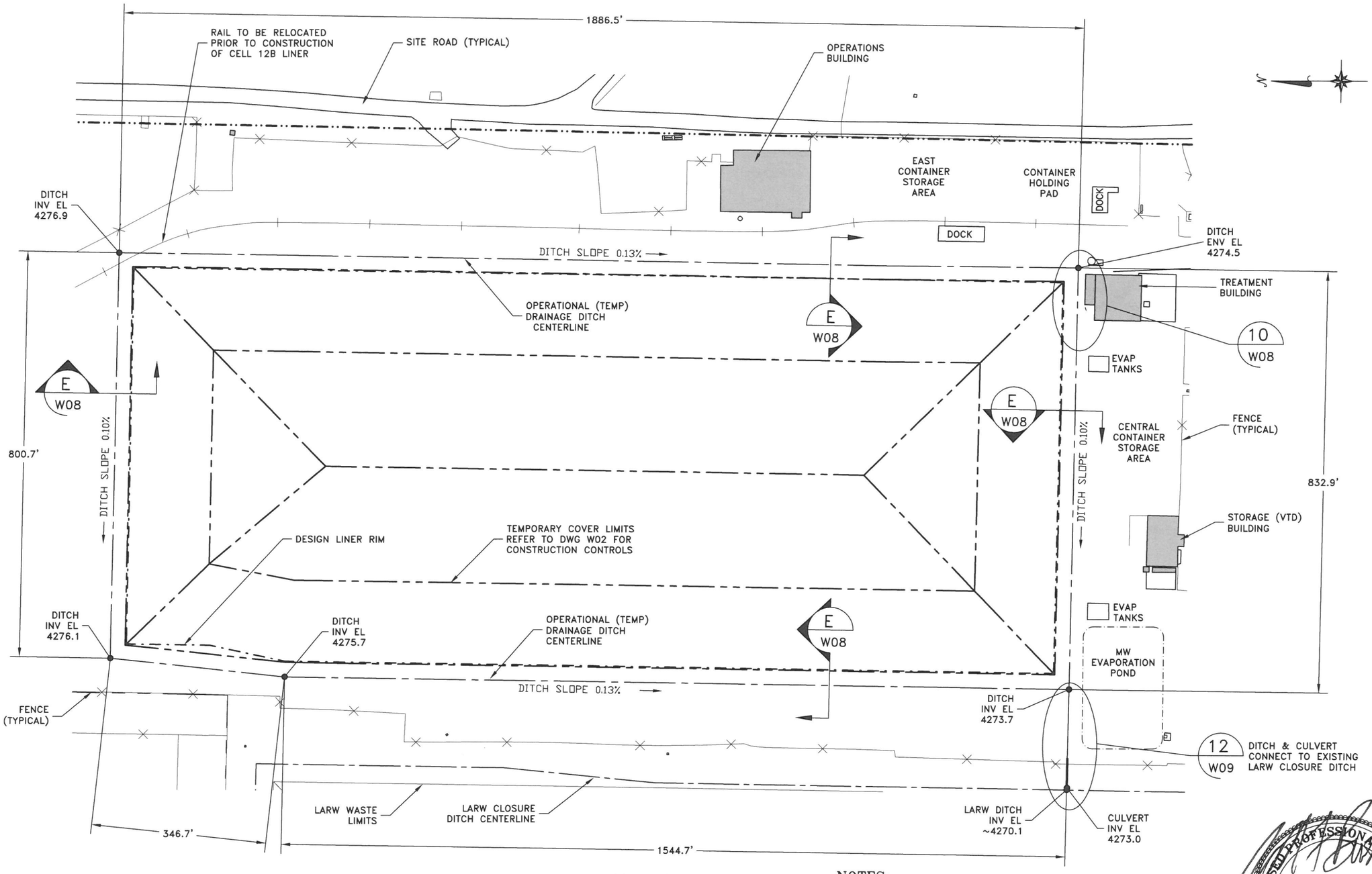

NOTES:

1. RELOCATED EXISTING HAUL ROADS AND RUN ON CONTROL BERMS AS NEEDED TO ACCOMMODATE THE OPERATIONAL COVER DRAINAGE DITCH.
2. DITCH AND CULVERT REFERENCED TO IN DETAIL 12 MAY BE CONSTRUCTED UP TO 250 FT TO THE NORTH TO ACCOMMODATE FIELD CONDITIONS. ELEVATIONS MAY ALSO CHANGE PER FIELD CONDITIONS. ANY CHANGES WILL BE DOCUMENTED ON COVER PROJECT AS-BUILT DRAWINGS. △3

LICENSED PROFESSIONAL ENGINEER
No. 189500
DAVID F BOOTH
4/24/14
STATE OF UTAH

	DATE	BY	DESCRIPTION OF CHANGE
△3	4/24/14	DFB	REVISED NOTE 2
△2	2/18/14	DFB	REMOVED LEACHATE EVAPORATION TANKS 225 & 250 (DEMOLISHED IN 2013)
△1	10/4/12	DFB	REMOVED DETAIL REFERENCE 11 & ADDED NOTE 2
△0	6/17/11	DFB	FOR LICENSE AMENDMENT

ENERGYSOLUTIONS

ENERGYSOLUTIONS "CLIVE" FACILITY
MIXED WASTE EMBANKMENT
OPERATIONAL (TEMPORARY) DITCH PLAN
CLIVE, UTAH

FINAL DRAWING

DRAFTED BY: D. BOOTH
REVIEWED BY: G. DUTSON
APPROVED BY: D. BOOTH
SCALE: AS NOTED | DATE: 06/17/11 | REV. △3
DRAWING NO. 11009 W07

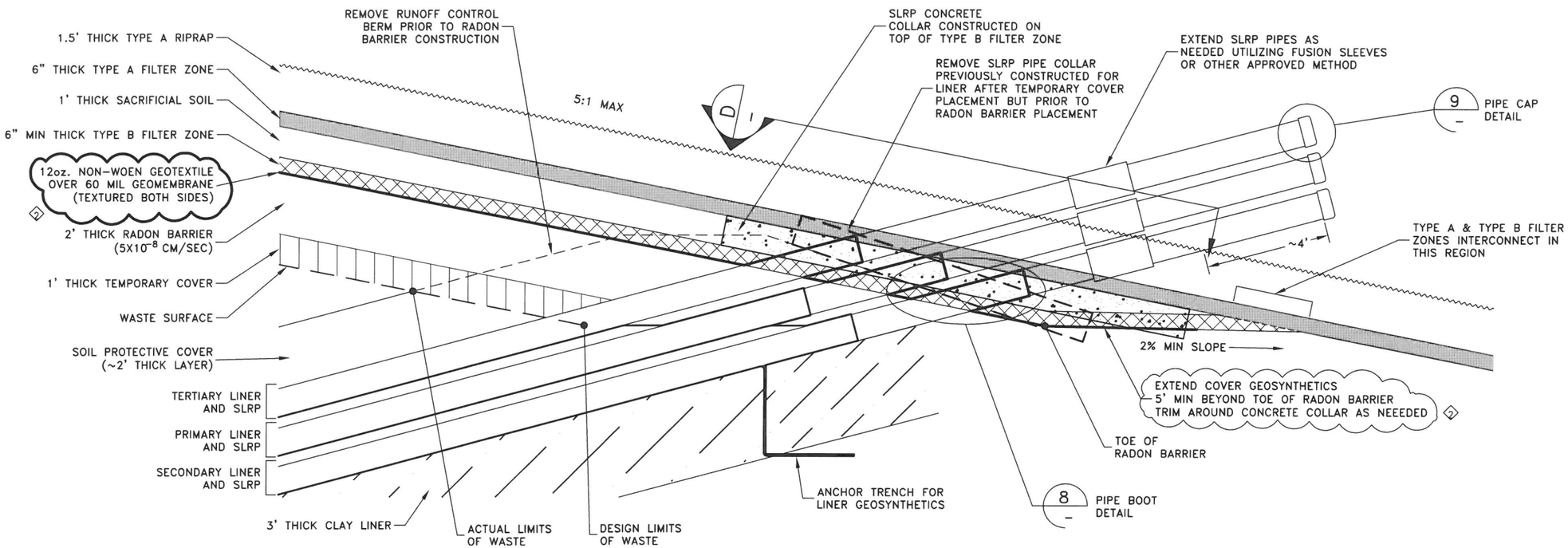

7 SUMP PIPE EXTENSION SECTION
W04 SCALE: 1" = 4'

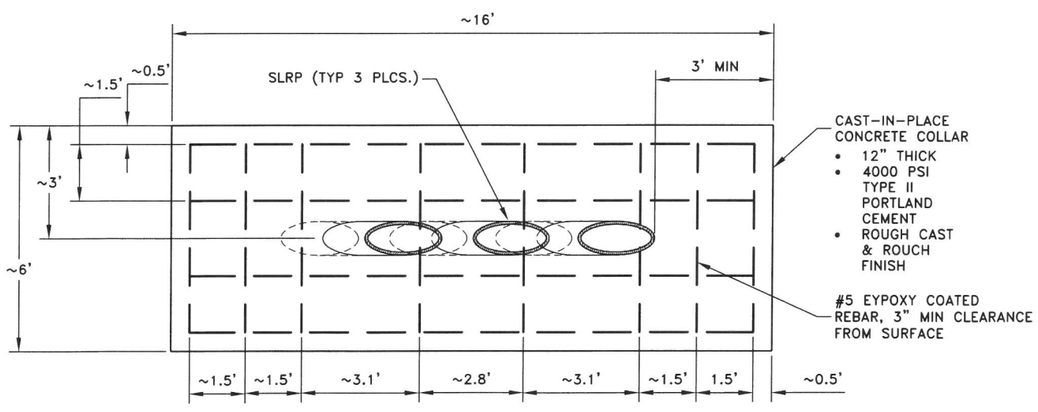

NOTE:
REBAR SPACING IS APPROXIMATE AND MAY NEED TO BE FIELD ADJUSTED TO FIT EXISTING SLRP PIPES.

D SLRP CONCRETE COLLAR DETAIL
NTS

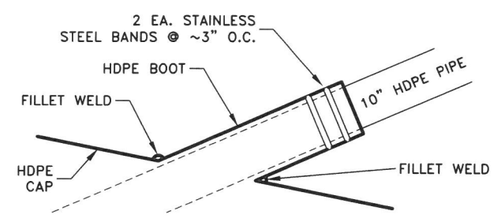

8 PIPE BOOT DETAIL
NTS

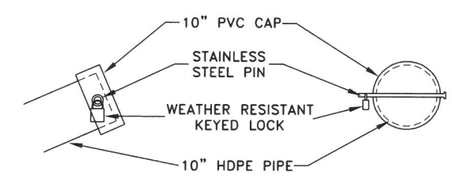

9 PIPE CAP DETAIL
NTS

LICENSED PROFESSIONAL ENGINEER
No. 189500
DAVID F BOOTH
2/18/14
STATE OF UTAH

DATE	BY	DESCRIPTION OF CHANGE
2/18/14	DFB	DESIGN CHANGE-ELIMINATED COVER GEOSYNTHETICS ANCHOR TRENCH
10/4/12	DFB	REVISED PIPE CONCRETE COLLAR DETAILS
6/17/11	DFB	FOR LICENSE AMENDMENT

ENERGYSOLUTIONS
ENERGYSOLUTIONS "CLIVE" FACILITY
MIXED WASTE EMBANKMENT
WASTE & FINAL COVER - SECTIONS & DETAILS
CLIVE, UTAH

FINAL DRAWING

DRAWN BY B. DICK
REVIEWED BY G. DUTSON
APPROVED BY D. BOOTH
SCALE AS NOTED DATE 06/17/11 REV. 2
DRAWING NO. 11009 W06

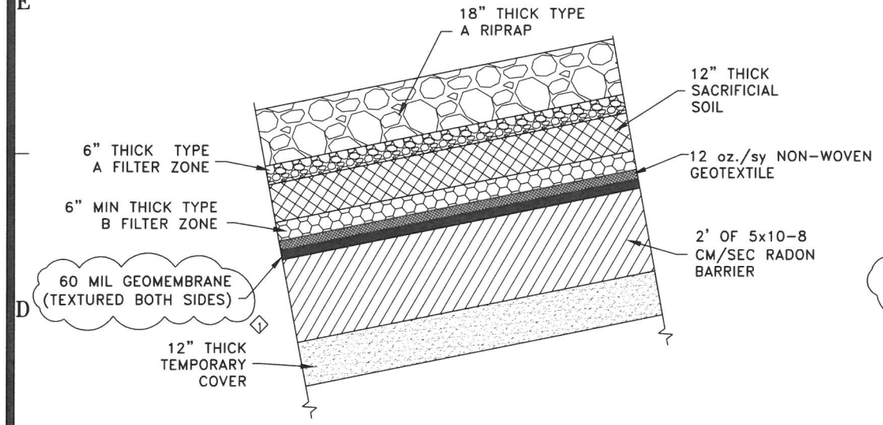

1 W03 DETAIL-SIDE SLOPE
NTS
TYPICAL SIDE SLOPE COVER DETAIL

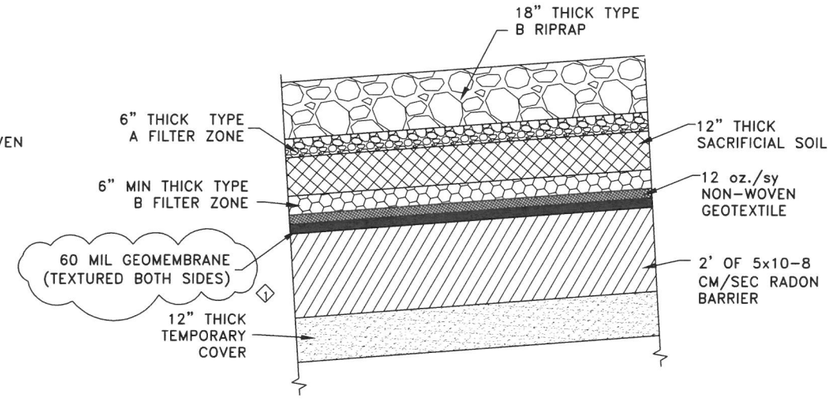

2 W03 DETAIL-TOP SLOPE
NTS
TYPICAL TOP SLOPE COVER DETAIL

COVER MATERIAL GRADATIONS (ASTM C-136)

TYPE A RIP RAP
- D_{100} <= 16 INCH
- D_{90} <= 12 INCH
- D_{50} >= 4-1/2 INCH
- D_{10} >= 2 INCH
- D_5 >= NO. 200 SIEVE

TYPE B RIP RAP
- D_{100} <= 4-1/2 INCH
- D_{50} >= 1-1/4 INCH
- D_{10} >= 3/4 INCH
- D_5 >= NO. 200 SIEVE

TYPE A FILTER ZONE
- D_{100} <= 6 INCH
- D_{70} <= 3 INCH
- D_{50} <= 1.57 INCH (40 mm)
- D_{15} <= .85 INCH (22 mm)
- D_{10} >= NO. 10 SIEVE (2mm)
- D_5 >= NO. 200 SIEVE

TYPE B FILTER & SACRIFICIAL SOIL

TYPE B FILTER & SACRIFICIAL SOIL MATERIAL GRADATIONS ARE DETERMINED BY THE FOLLOWING SPECIFICATION:

$\frac{D_{15}\ (MAX)\ FILTER}{D_{85}\ (MIN)\ SOIL}$ MUST BE < 5

$\frac{D_{50}\ (MAX)\ FILTER}{D_{50}\ (MIN)\ SOIL}$ MUST BE <= 25

TYPE B FILTER D_{100} <= 1.5 INCH

TYPE B FILTER MIN PERMEABILITY = 3.5 cm/sec

SACRIFICIAL SOIL MIN MOISTURE @ 15 atm = 3.5%

TYPE A FILTER & SACRIFICIAL SOIL MATERIAL GRADATIONS SHALL MEET THE FOLLOWING SPECIFICATION:

$\frac{D_{15}\ FILTER}{D_{85}\ SOIL}$ MUST BE <= 4

$\frac{D_{15}\ SOIL}{D_{85}\ FILTER}$ MUST BE <= 4

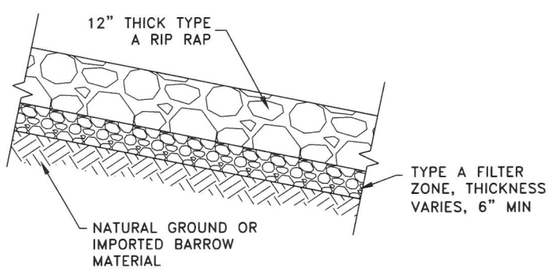

3 W03 DETAIL-DITCH OUTER SLOPE
NTS
TYPICAL PERIMETER DITCH COVER DETAIL

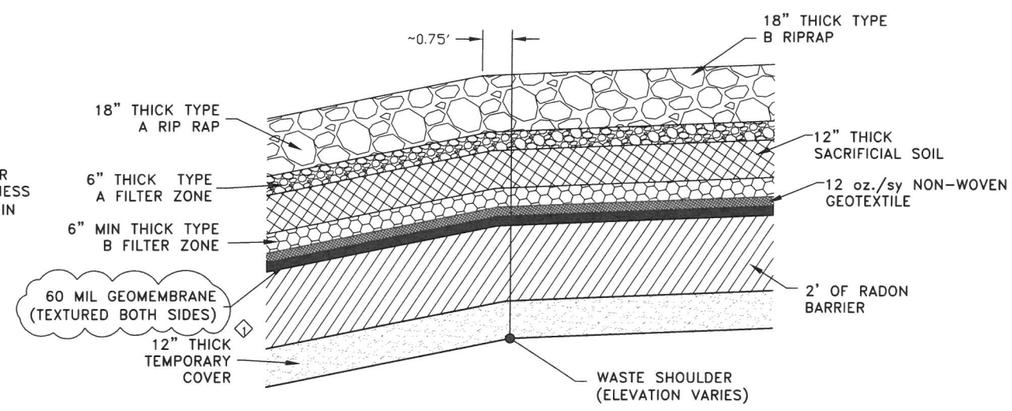

4 W03 DETAIL-SHOULDER
NTS

NOTE:
ADDITIONAL MATERIAL SPECIFICATIONS RELATED TO COVER CONSTRUCTION ARE LOCATED IN THE CONSTRUCTION QUALITY ASSURANCE/QUALITY CONTROL MANUAL UNDER THE APPLICABLE WORK ELEMENT.

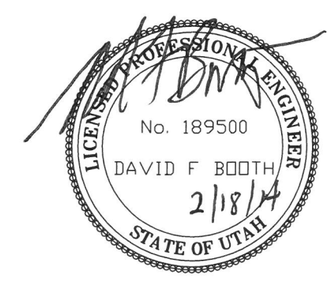

DATE	BY	DESCRIPTION OF CHANGE
2/18/14	DFB	REVISED GEOMEMBRANE LABELING
6/17/11	DFB	FOR LICENSE AMENDMENT

ENERGYSOLUTIONS

ENERGYSOLUTIONS "CLIVE" FACILITY
MIXED WASTE EMBANKMENT
WASTE & FINAL COVER - SECTIONS & DETAILS
CLIVE, UTAH

FINAL DRAWING

DRAFTED BY: B. DICK
REVIEWED BY: G. DUTSON
APPROVED BY: D. BOOTH
SCALE: AS NOTED | DATE: 06/17/11 | REV.
DRAWING NO. 11009 W05

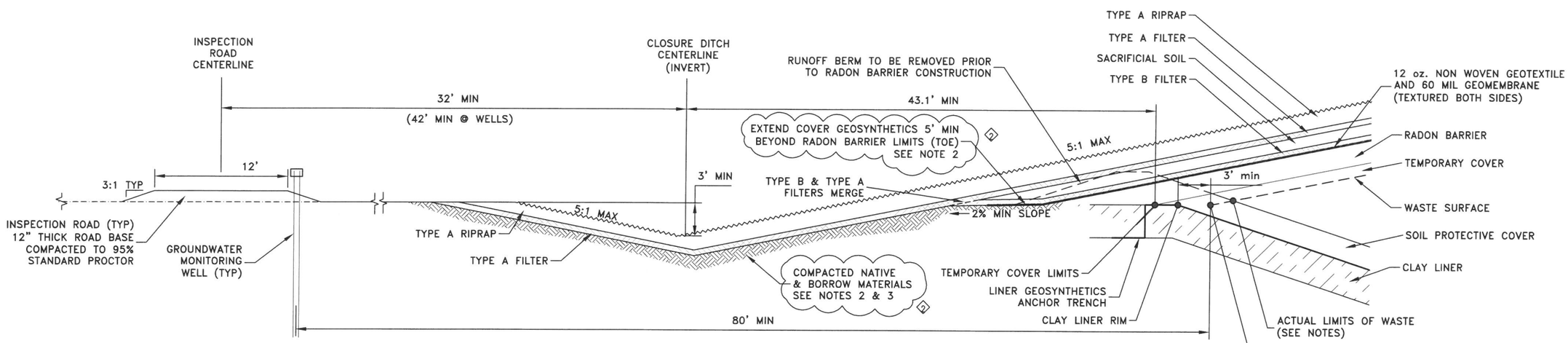

5 W03 TYPICAL COVER/DITCH DETAIL
SCALE: 1" = 10'

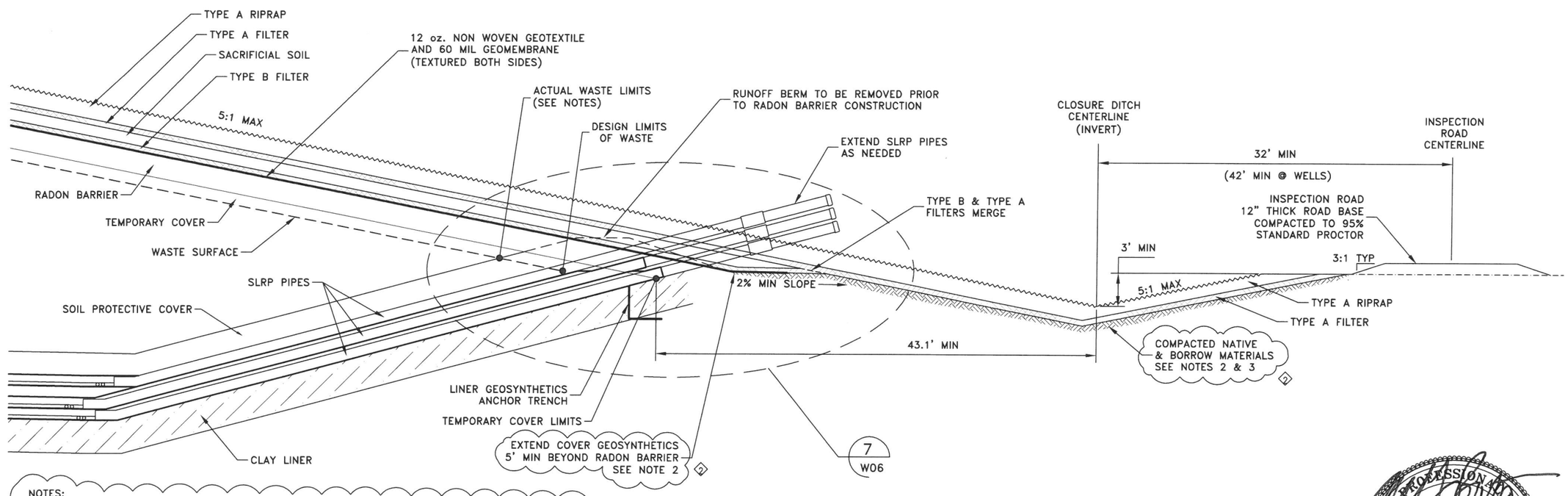

6 W03 TYPICAL COVER/DITCH DETAIL @ SLRPs
SCALE: 1" = 10'

NOTES:
1. DESIGN LIMIT OF WASTE IS CONTROLLED BY THE HORIZONTAL AND VERTICAL LIMITS OF THE CLAY LINER RIM. HOWEVER, THE ACTUAL WASTE LIMIT IS WHERE THE DESIGN WASTE SURFACE AND THE SOIL PROTECTIVE COVER SURFACE INTERSECT (AS SHOWN IN THE SECTIONS ABOVE). SINCE THE SLOPES OF THE LINER AND THE THICKNESS OF THE SOIL PROTECTIVE COVER VARY, THE ACTUAL WASTE LIMIT VARIES SLIGHTLY AS WELL.
2. EXTEND THE COVER GEOMEMBRANE AND GEOTEXTILE A MINIMUM OF 5' BEYOND THE RADON BARRIER LIMITS (TOE). PRIOR TO INSTALLING THE GEOMEMBRANE, GRADE THE SURFACE TO SLOPE (2% MINIMUM) AWAY FROM THE RADON BARRIER TOE AND COMPACT THE SURFACE WITH A MINIMUM OF 4 PASSES WITH A VIBRATORY SMOOTH DRUM COMPACTOR.
3. THE CLOSURE DRAINAGE DITCH IS CONSTRUCTED (EXCAVATED) INTO NATIVE CLAY MATERIAL. IF FILL (BORROW) IS REQUIRED, USE APPROVED NATIVE CLAY MATERIAL PLACED IN MAXIMUM 9" THICK LOOSE LIFTS AND COMPACTED TO 95% OF A STANDARD PROCTOR. COMPACT THE FINAL DITCH SURFACE WITH A MINIMUM OF 4 PASSES WITH A VIBRATORY SMOOTH DRUM COMPACTOR.

LICENSED PROFESSIONAL ENGINEER
No. 189500
DAVID F BOOTH
4/24/14
STATE OF UTAH

2	4/24/14	DFB	ADDED DITCH FOUNDATION SPECIFICATIONS
1	2/18/14	DFB	DESIGN CHANGE-ELIMINATED COVER GEOSYNTHETICS ANCHOR TRENCH
0	6/17/11	DFB	FOR LICENSE AMENDMENT
	DATE	BY	DESCRIPTION OF CHANGE

ENERGYSOLUTIONS
ENERGYSOLUTIONS "CLIVE" FACILITY
MIXED WASTE EMBANKMENT
WASTE & FINAL COVER – SECTIONS & DETAILS
CLIVE, UTAH

FINAL DRAWING

DRAFTED BY: B. DICK
REVIEWED BY: G. DUTSON
APPROVED BY: D. BOOTH
SCALE: AS NOTED | DATE: 06/17/11 | REV. 2
DRAWING NO. 11009 W04

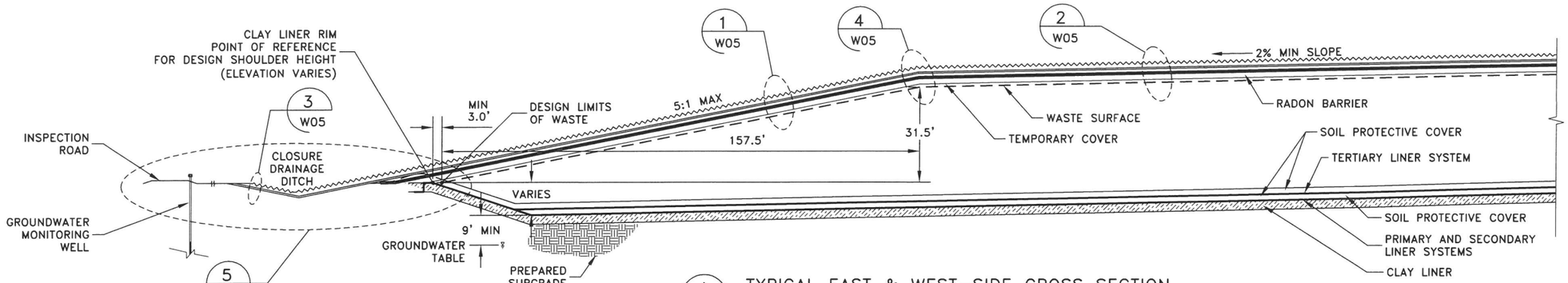

A W01 TYPICAL EAST & WEST-SIDE CROSS SECTION
SCALE: 1" = 40'

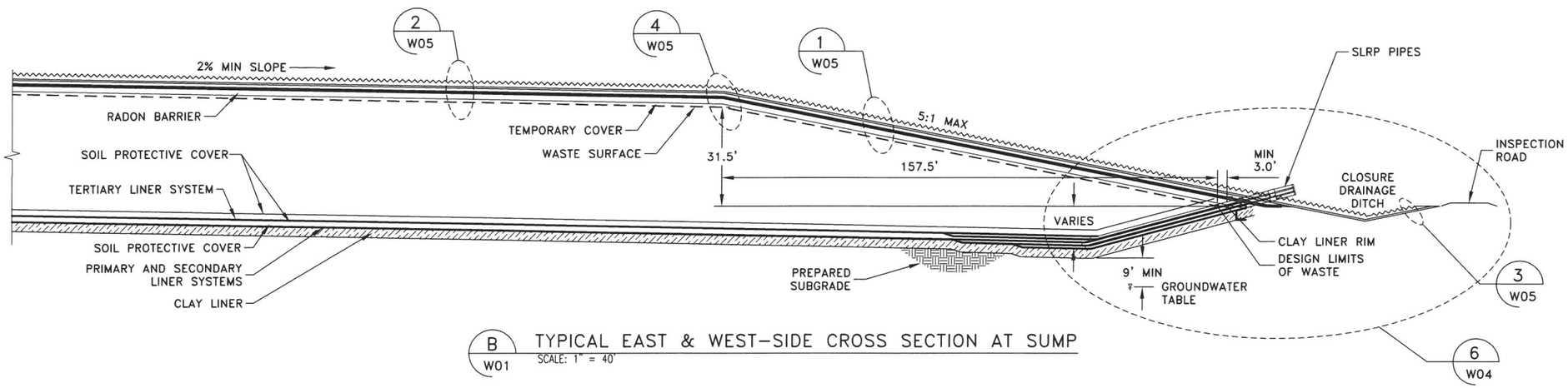

B W01 TYPICAL EAST & WEST-SIDE CROSS SECTION AT SUMP
SCALE: 1" = 40'

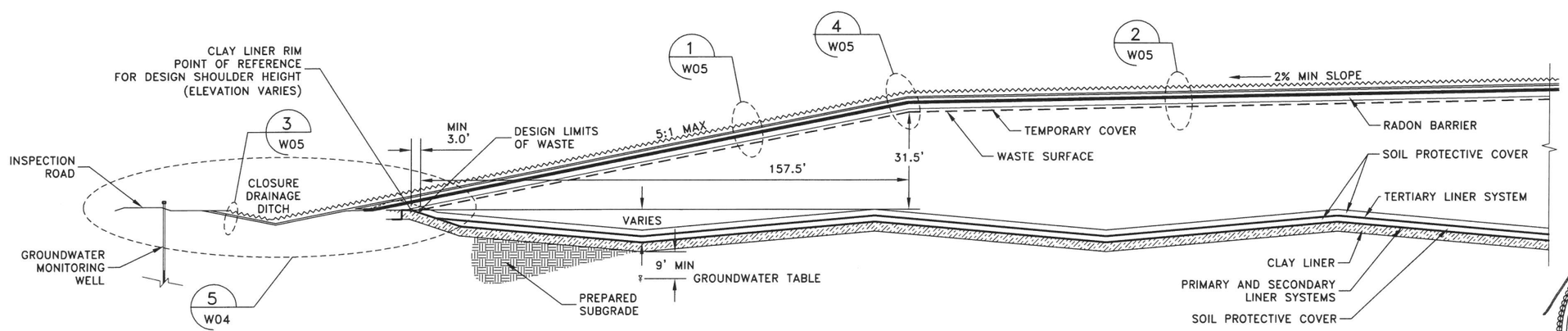

C W01 TYPICAL NORTH & SOUTH-SIDE CROSS SECTION
SCALE: 1" = 40'

LICENSED PROFESSIONAL ENGINEER
No. 189500
DAVID F BOOTH
2/18/14
STATE OF UTAH

DATE	BY	DESCRIPTION OF CHANGE
2/18/14	DFB	DESIGN CHANGE-ELIMINATED COVER GEOSYNTHETICS ANCHOR TRENCH
5/25/11	DFB	FOR LICENSE AMENDMENT

ENERGYSOLUTIONS

ENERGYSOLUTIONS "CLIVE" FACILITY
MIXED WASTE EMBANKMENT
WASTE & FINAL COVER - CROSS SECTIONS
CLIVE, UTAH

FINAL DRAWING

DRAFTED BY: B. DICK
REVIEWED BY:
APPROVED BY: D. BOOTH
SCALE: AS NOTED | DATE: 4/19/11 | REV. 1
DRAWING NO. 11009 W03

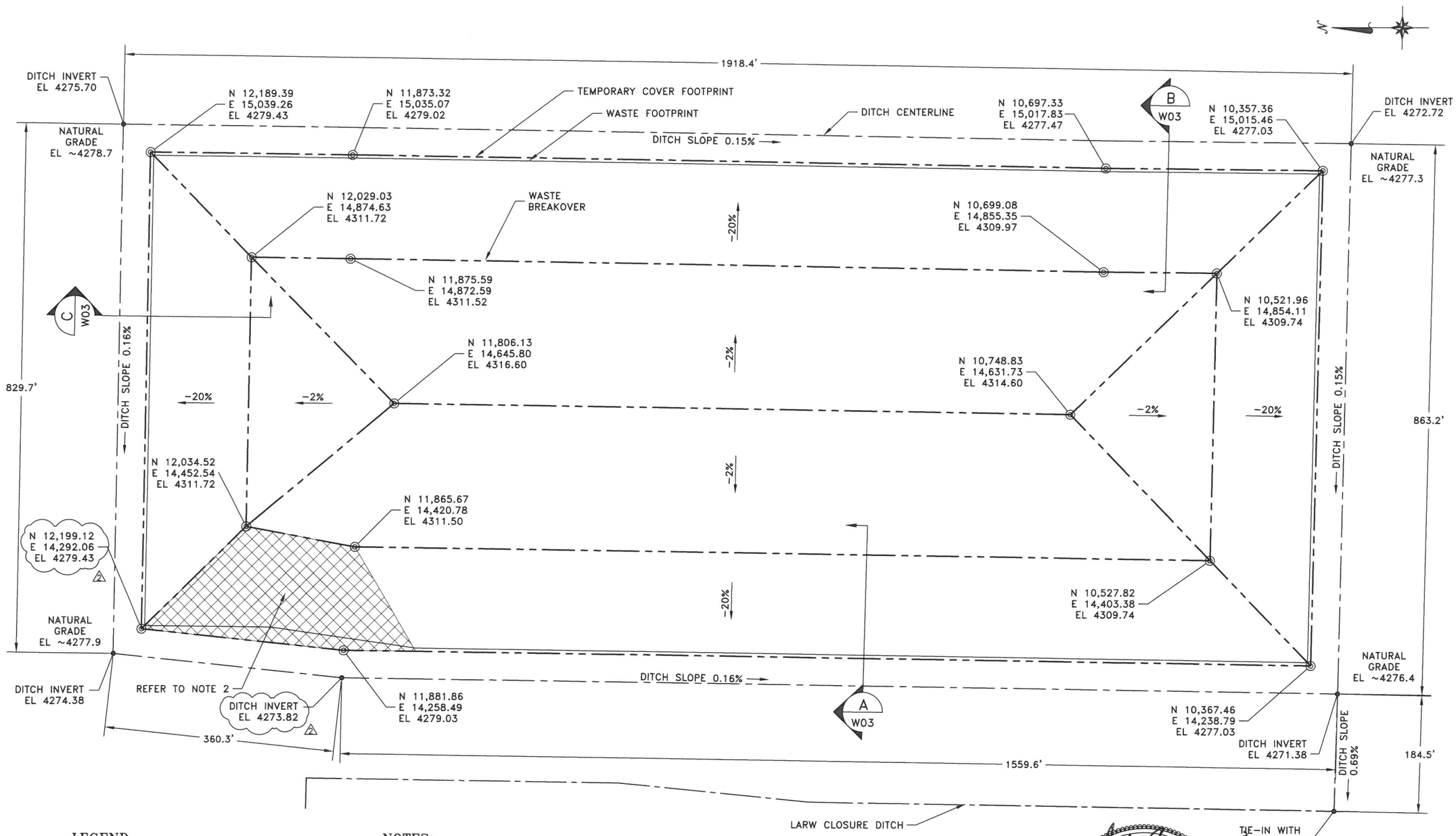

LEGEND:

- CLOSURE DITCH CENTERLINE
- TEMPORARY COVER LIMITS
- DESIGN WASTE LIMITS

80 0 80 160

NOTES:

1. ELEVATIONS ARE FOR TOP OF TEMPORARY COVER UNLESS OTHERWISE NOTED.
2. TEMPORARY COVER IN THIS AREA WILL BE PLACED THICKER THAN 1 FT TO TRANSITION FROM TOP OF WASTE SURFACE TO A MORE UNIFORM COVER SURFACE.
3. EMBANKMENT CAPACITY FROM THE DESIGN TOP OF PROTECTIVE SOIL COVER (2ND LAYER) TO THE TOP OF WASTE IS CALCULATED TO BE 1,353,004 CY.

LICENSED PROFESSIONAL ENGINEER
No. 189500
DAVID F BOOTH
4/24/14
STATE OF UTAH

	DATE	BY	DESCRIPTION OF CHANGE
2	4/24/14	DFB	CORRECTED NE CORNER COORDINATE AND WEST DITCH MID POINT ELEVATION
1	9/28/12	DFB	REVISED WASTE CAPACITY BASED ON MORE ACCURATE VOLUME CALCULATION
0	6/17/11	DFB	FOR LICENSE AMENDMENT

ENERGYSOLUTIONS

ENERGYSOLUTIONS "CLIVE" FACILITY
MIXED WASTE EMBANKMENT
TEMPORARY COVER SURFACE & CLOSURE DITCH CONTROLS
CLIVE, UTAH

FINAL DRAWING

DRAFTED BY: B. DICK
REVIEWED BY: G. DUTSON
APPROVED BY: D. BOOTH
SCALE: AS NOTED
DATE: 06/17/11
REV. 2
DRAWING NO. 11009 W02

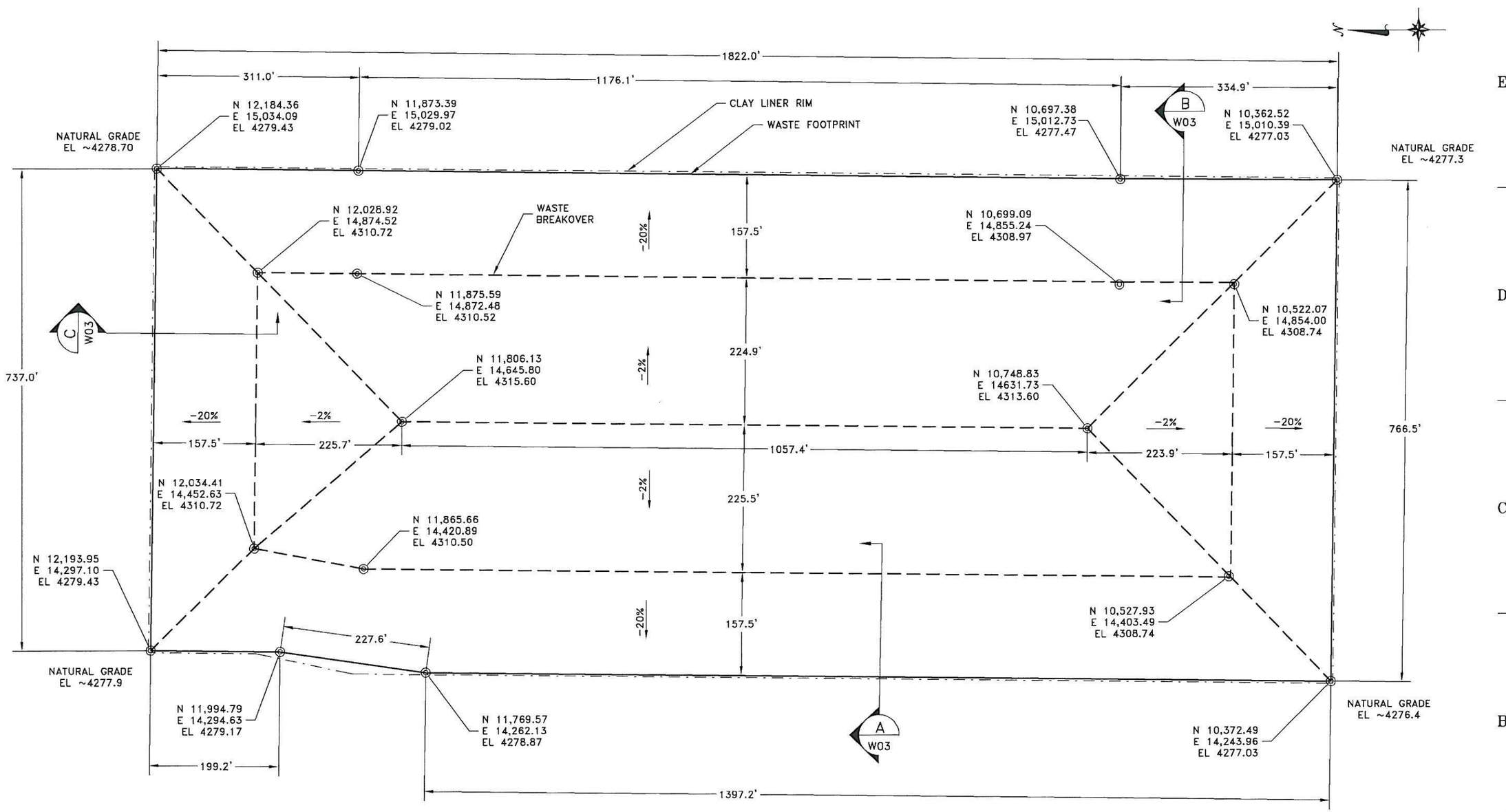

LEGEND:

- DESIGN WASTE LIMITS
- DESIGN WASTE BREAK LINES
- DESIGN CLAY LINER RIM

80 0 80 160

NOTES:

1. ELEVATIONS AND DIMENSIONS ARE FOR TOP OF WASTE UNLESS OTHERWISE NOTED.

LICENSED PROFESSIONAL ENGINEER
No. 189500
DAVID F BOOTH
6/17/11
STATE OF UTAH

DATE	BY	DESCRIPTION OF CHANGE
6/17/11	DFB	FOR LICENSE AMENDMENT

ENERGYSOLUTIONS

ENERGYSOLUTIONS "CLIVE" FACILITY
MIXED WASTE EMBANKMENT
EMBANKMENT WASTE SURFACE CONTROLS
CLIVE, UTAH

FINAL DRAWING

DRAFTED BY: B.DICK
REVIEWED BY: G. DUTSON
APPROVED BY: D.BOOTH
SCALE: AS NOTED
DATE: 06/17/11
REV.
DRAWING NO.: 11009 W01

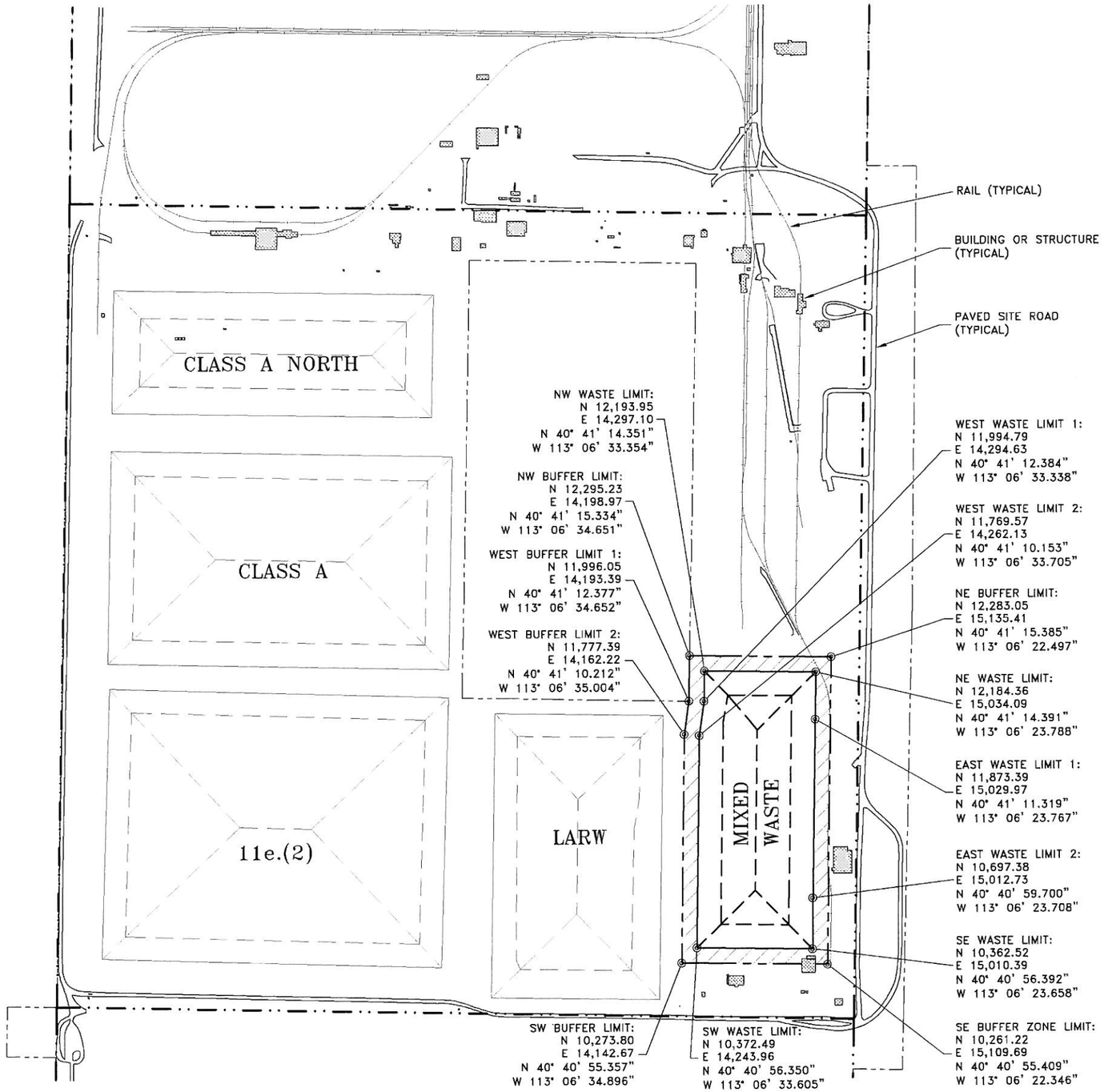

N

LEGEND:

- MW WASTE LIMITS
- MW WASTE BREAK LINES
- MW BUFFER ZONE LIMITS
- SECTION BOUNDARIES
- PROPERTY BOUNDARIES
- MW BUFFER ZONE

NOTES:

COORDINATES ARE LISTED BOTH IN THE LOCAL "CLIVE" SYSTEM AND AS LATITUDE AND LONGITUDE.

400 0 400 800

LICENSED PROFESSIONAL ENGINEER
No. 189500
DAVID F BOOTH
6/17/11
STATE OF UTAH

DATE	BY	DESCRIPTION OF CHANGE
6/17/11	BY	FOR LICENSE AMENDMENT

ENERGYSOLUTIONS

ENERGYSOLUTIONS "CLIVE" FACILITY
MIXED WASTE EMBANKMENT
EMBANKMENT LOCATION MAP & BUFFER ZONE
CLIVE, UTAH

FINAL DRAWING

DRAFTED BY: B. DICK
REVIEWED BY: G. DUTSON
APPROVED BY: D. BOOTH
SCALE: AS NOTED | DATE: 06/17/11 | REV.
DRAWING NO. 11009 U01

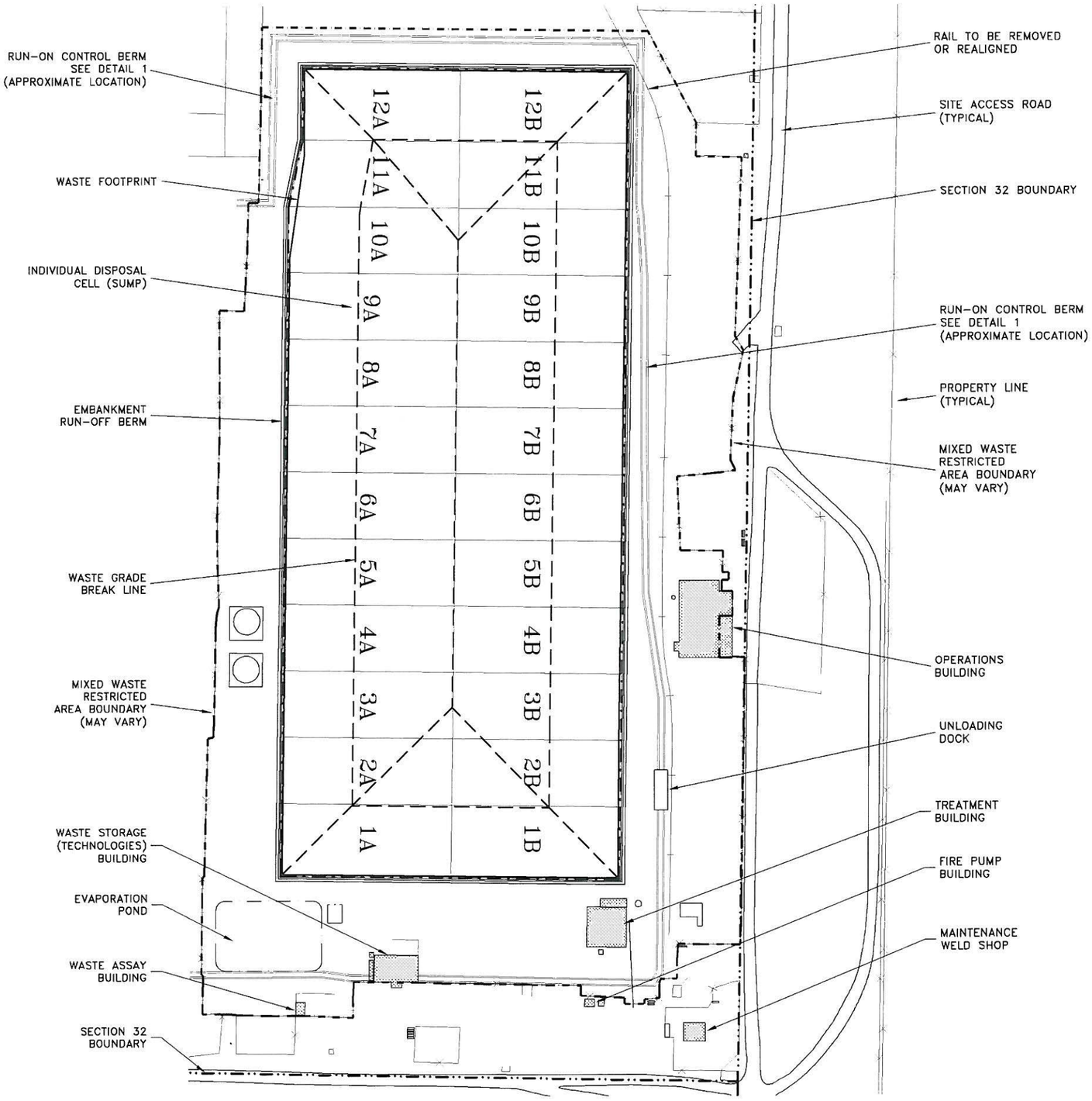

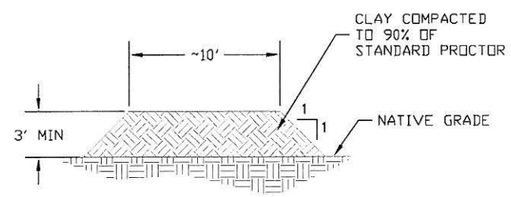

1 RUN-ON CONTROL BERM
NOT TO SCALE

NOTES:
1. DRAWING INCORPORATES INFORMATION ON FORMER DRAWING 9401-6, REV T.
2. CELLS (SUMPS) 11A AND 12A ARE MODIFIED (SHORTENED) TO PROVIDE A MINIMUM 100 FT BUFFER AREA BETWEEN THE TOE OF WASTE AND THE PROPERTY (VITRO) BOUNDARY.

LICENSED PROFESSIONAL ENGINEER
No. 189500
DAVID F BOOTH
6/17/11
STATE OF UTAH

DATE	BY	DESCRIPTION OF CHANGE
6/17/11	DFB	FOR LICENSE AMENDMENT

ENERGYSOLUTIONS

ENERGYSOLUTIONS "CLIVE" FACILITY
MIXED WASTE EMBANKMENT
FACILITY & EMBANKMENT LAYOUT
CLIVE, UTAH

FINAL DRAWING

DRAFTED BY D. BOOTH
REVIEWED BY G. DUTSON
APPROVED BY D. BOOTH
SCALE NOT TO SCALE DATE 06/17/11 REV. 1
DRAWING NO. 11009 L01

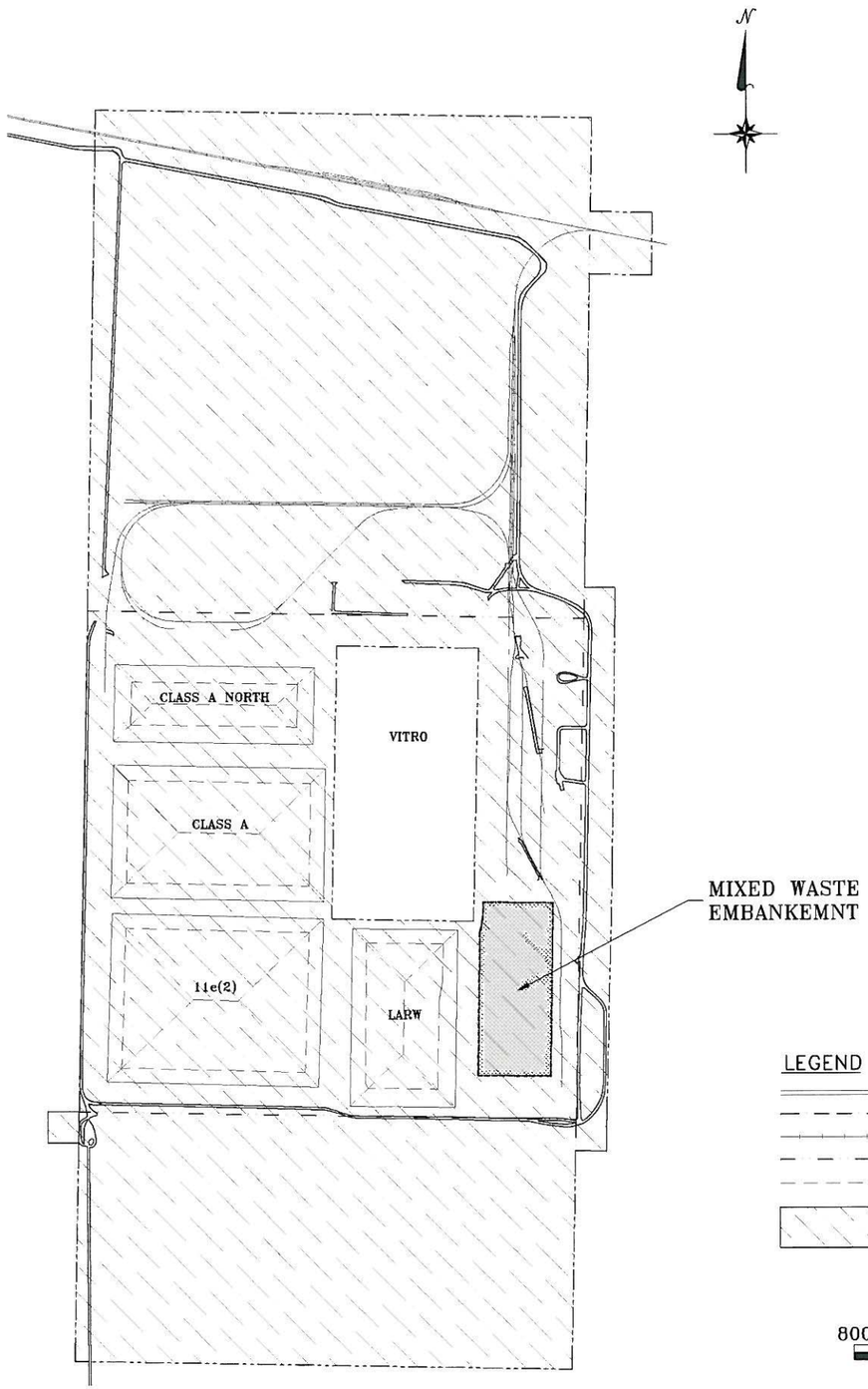

MIXED WASTE EMBANKMENT

DWG. NO.	DESCRIPTION
11009-G01	TITLE SHEET
11009-L01	FACILITY & EMBANKMENT LAYOUT
11009-C01	EMBANKMENT LINER LAYOUT
11009-C02 TO C06	LINER SECTIONS & DETAILS
11009-C07	CELL LINER COVER GRADING
11009-W01	EMBANKMENT WASTE SURFACE CONTROLS
11009-W02	TEMPORARY COVER SURFACE & CLOSURE DITCH CONTROLS
11009-W03	WASTE & FINAL COVER - CROSS SECTIONS
11009-W04 TO W06	WASTE & FINAL COVER - SECTIONS & DETAILS
11009-W07	OPERATIONAL (TEMPORARY) DITCH PLAN
11009-W08 TO W09	OPERATIONAL (TEMPOARY DITCH SECTIONS & DETAILS
11009-U01	EMBANKMENT LOCATION MAP & BUFFER ZONE
11009-U02	EMBANKMENT ENVIRONMENTAL MONITORING

LEGEND

- ROAD
- PROPERTY LINE
- RAILROAD
- SECTION LINE
- PERMITED EMBANKMENTS
- ENERGYSOLUTIONS PROPERTY

800 0 800 1600

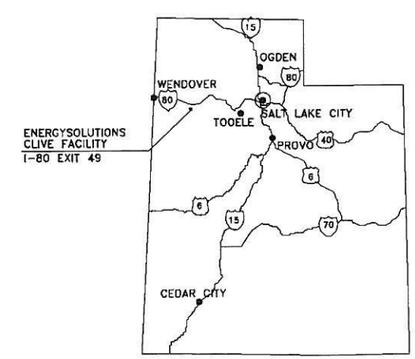

UTAH
VICINITY MAP

LICENSED PROFESSIONAL ENGINEER
No. 189500
DAVID F BOOTH
6/17/11
STATE OF UTAH

DATE	BY	DESCRIPTION OF CHANGE
6/17/11	DFB	FOR LICENSE AMENDMENT

ENERGYSOLUTIONS
MIXED WASTE FACILITY
MIXED WASTE EMBANKMENT
TITLE SHEET
CLIVE, UTAH

FINAL DRAWING

DRAFTED BY B. DICK
REVIEWED BY G. DUTSON
APPROVED BY D. BOOTH
SCALE AS NOTED DATE 06/17/11 REV. 1
DRAWING NO. 11009 G01

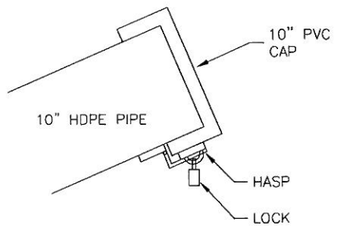

TYPE I

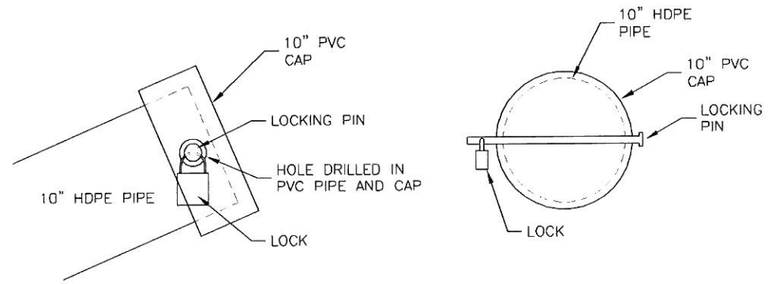

TYPE II

1 / C02 PIPE CAP DETAIL
NOT TO SCALE

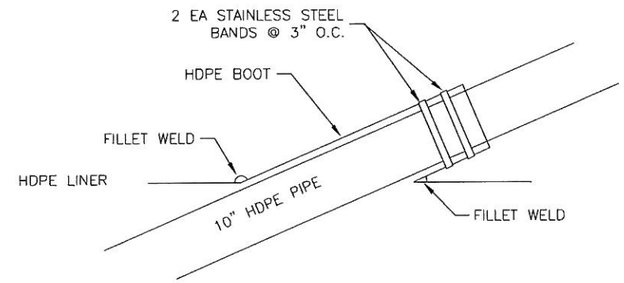

3 / C02 PIPE BOOT DETAIL
NOT TO SCALE

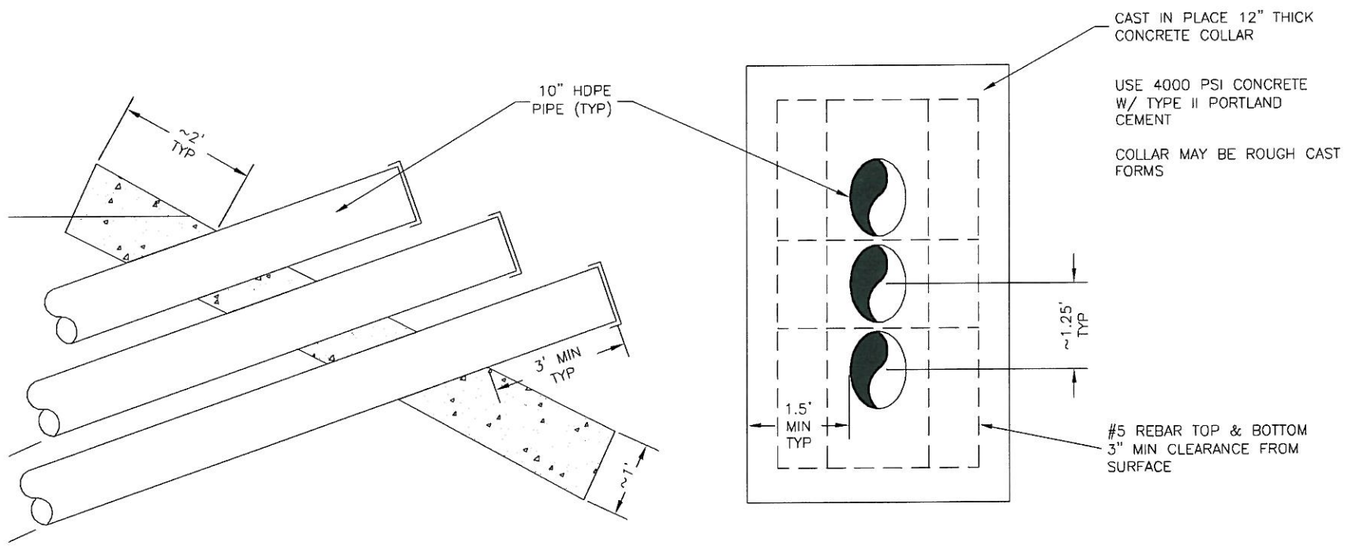

2 / C02 PIPE SUPPORT DETAIL
NOT TO SCALE

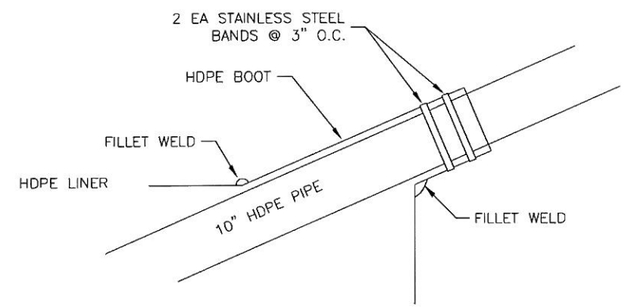

4 / C02 PIPE BOOT DETAIL
NOT TO SCALE

NOTES:

1. DRAWING INCORPORATES INFORMATION FROM FORMER DRAWING 9401-6D, REV E.
2. DRAWING APPLIES ONLY TO PHASE V & VI (CELLS 9A, 9B, 10A & 10B) AND FUTURE CELLS 11A, 11B, 12A AND 12B.

LICENSED PROFESSIONAL ENGINEER
No. 189500
DAVID F BOOTH
6/17/11
STATE OF UTAH

REV	DATE	BY	DESCRIPTION OF CHANGE
0	6/17/11	DFB	FOR LICENSE AMENDMENT

ENERGYSOLUTIONS
ENERGYSOLUTIONS "CLIVE" FACILITY
MIXED WASTE EMBANKMENT
LINER SECTIONS & DETAILS
CLIVE, UTAH

FINAL DRAWING

DRAFTED BY D. BOOTH
REVIEWED BY G. DUTSON
APPROVED BY D. BOOTH
SCALE AS NOTED | DATE 06/17/11 | REV. 0
DRAWING NO. 11009 C06

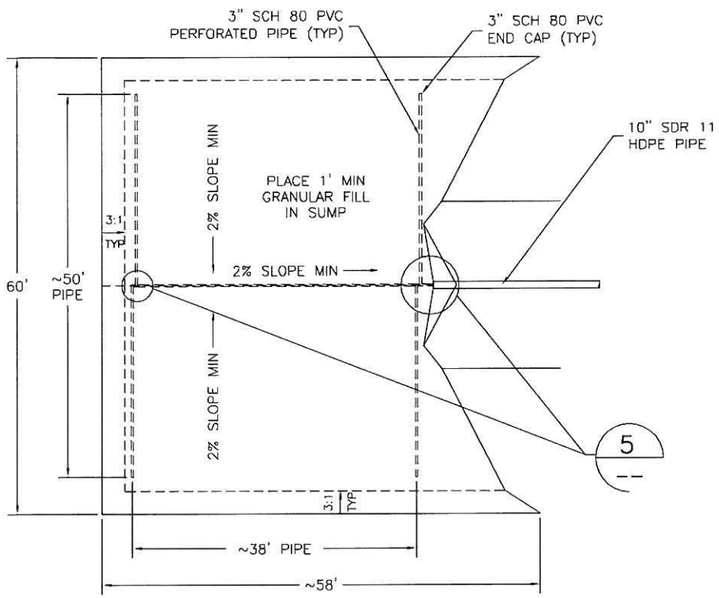

TERTIARY SLRP PLAN

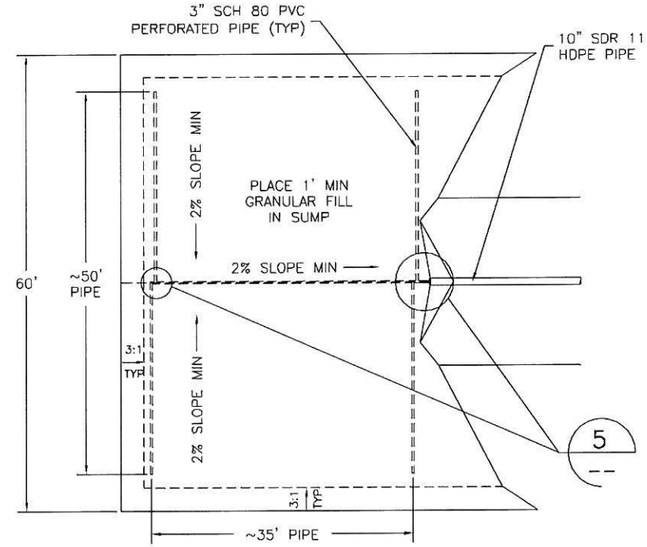

PRIMARY SLRP PLAN

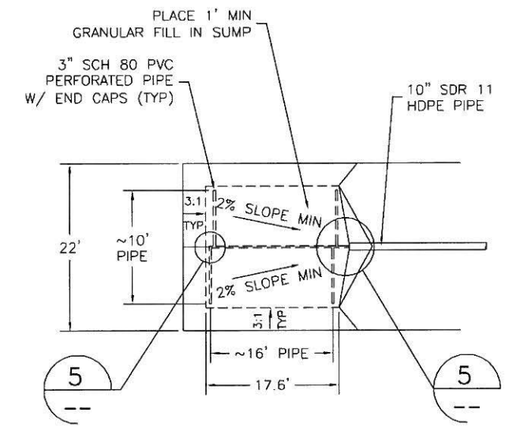

SECONDARY SLRP PLAN

D SLRP SUMP PLAN VIEW
C02 NTS

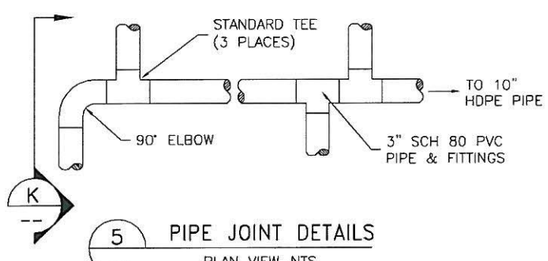

5 PIPE JOINT DETAILS
-- PLAN VIEW-NTS

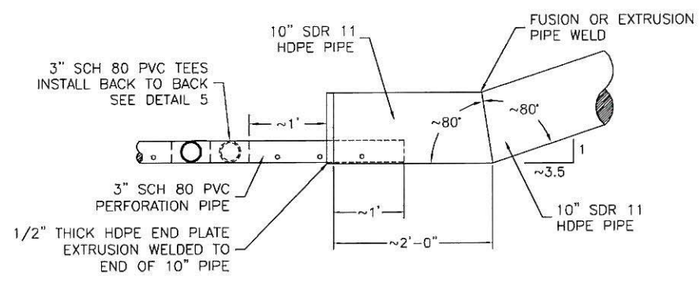

C 3" TO 10" PIPE CONNECTION DETAIL
C02 NTS

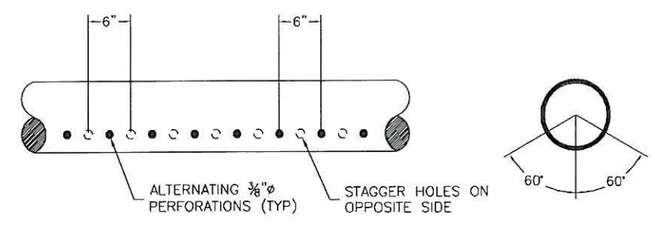

PIPE PERFORATION DETAIL
NTS

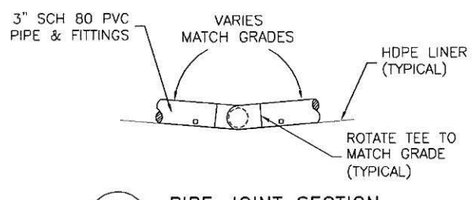

K PIPE JOINT SECTION
-- NTS

NOTES:

1. DRAWING INCORPORATES INFORMATION FROM FORMER DRAWING 9401-6A, REV E.
2. ALL PVC JOINTS TO BE CONNECTED WITH STAINLESS STEEL SCREWS (#12 x 1"). MINIMUM OF TWO (2) PER JOINT, INSTALLED ON OPPOSITE SIDES OF THE PIPE. DO NOT USE PVC CEMENT.
3. REMOVE ALL CUTTINGS AND TRIMMINGS FROM PIPES.
4. DRAWING APPLIES ONLY TO PHASE V & VI (CELLS 9A, 9B, 10A & 10B) AND FUTURE CELLS 11A, 11B, 12A AND 12B.

LICENSED PROFESSIONAL ENGINEER
No. 189500
DAVID F BOOTH
6/17/11
STATE OF UTAH

DATE	BY	DESCRIPTION OF CHANGE
6/17/11	DFB	FOR LICNESE AMENDMENT

ENERGYSOLUTIONS

ENERGYSOLUTIONS "CLIVE" FACILITY
MIXED WASTE EMBANKMENT
LINER SECTIONS & DETAILS
CLIVE, UTAH

FINAL DRAWING

DRAFTED BY D. BOOTH
REVIEWED BY G. DUTSON
APPROVED BY D. BOOTH
SCALE AS NOTED | DATE 06/17/11 | REV 1
DRAWING NO. 11009 C05

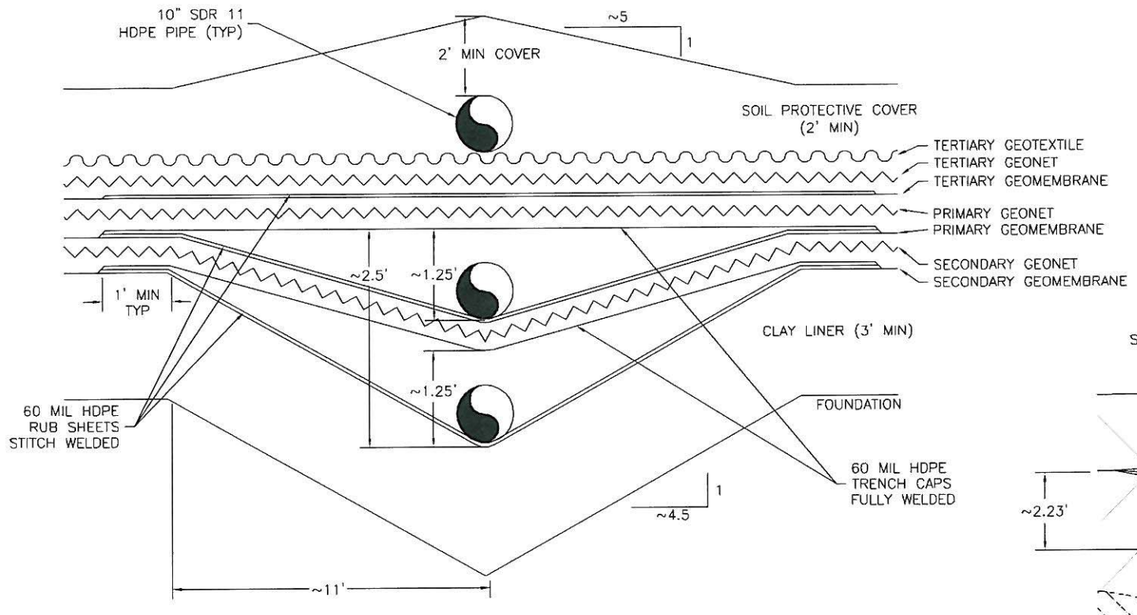

G / C02 WITHDRAWAL PIPE TRENCH (EXPLODED VIEW)
NTS

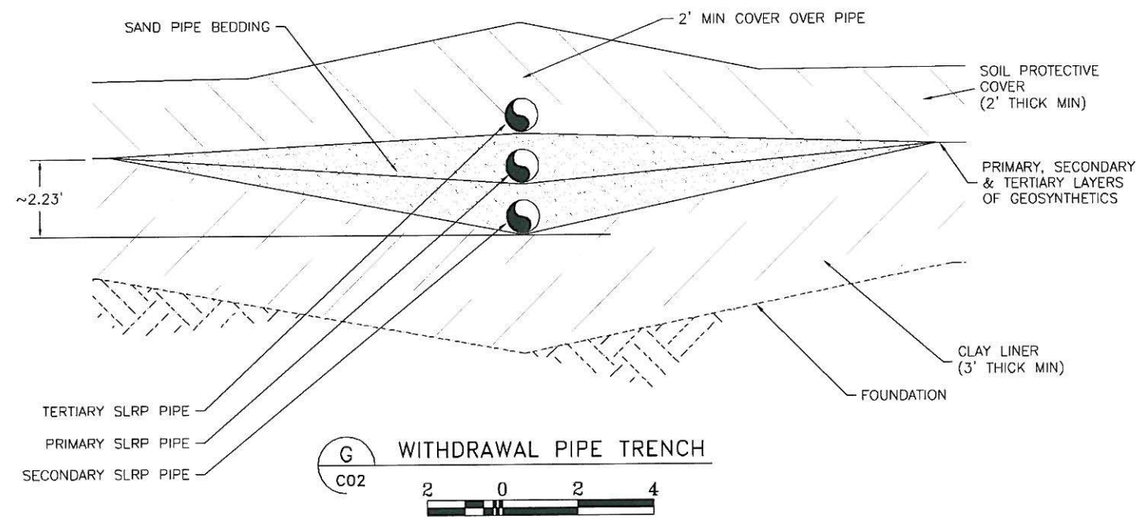

G / C02 WITHDRAWAL PIPE TRENCH

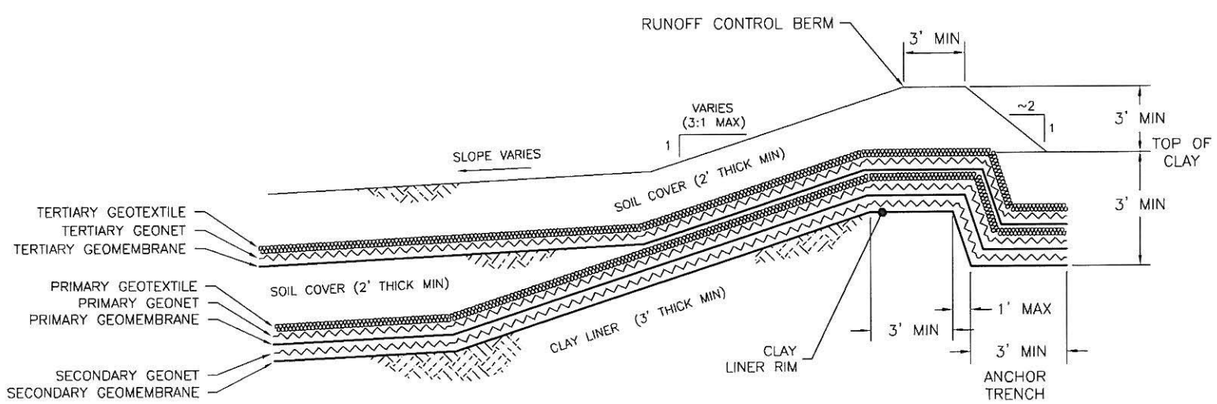

E / C02 ANCHOR TRENCH (TYP)
NTS

NOTES:

1. DRAWING INCORPORATES INFORMATION FROM FORMER DRAWING 9401-6F, REV C.
2. DRAWING APPLIES ONLY TO PHASE V & VI (CELLS 9A, 9B, 10A & 10B) AND FUTURE CELLS 11A, 11B, 12A AND 12B.

LICENSED PROFESSIONAL ENGINEER
No. 189500
DAVID F BOOTH
6/17/11
STATE OF UTAH

DATE	BY	DESCRIPTION OF CHANGE
6/17/11	DFB	FOR LICENSE AMENDMENT

ENERGYSOLUTIONS

ENERGYSOLUTIONS "CLIVE" FACILITY
MIXED WASTE EMBANKMENT
LINER SECTIONS & DETAILS
CLIVE, UTAH

FINAL DRAWING

DRAFTED BY D. BOOTH
REVIEWED BY G. DUTSON
APPROVED BY D. BOOTH
SCALE AS NOTED | DATE 06/17/11 | REV. 1
DRAWING NO. 11009 C04

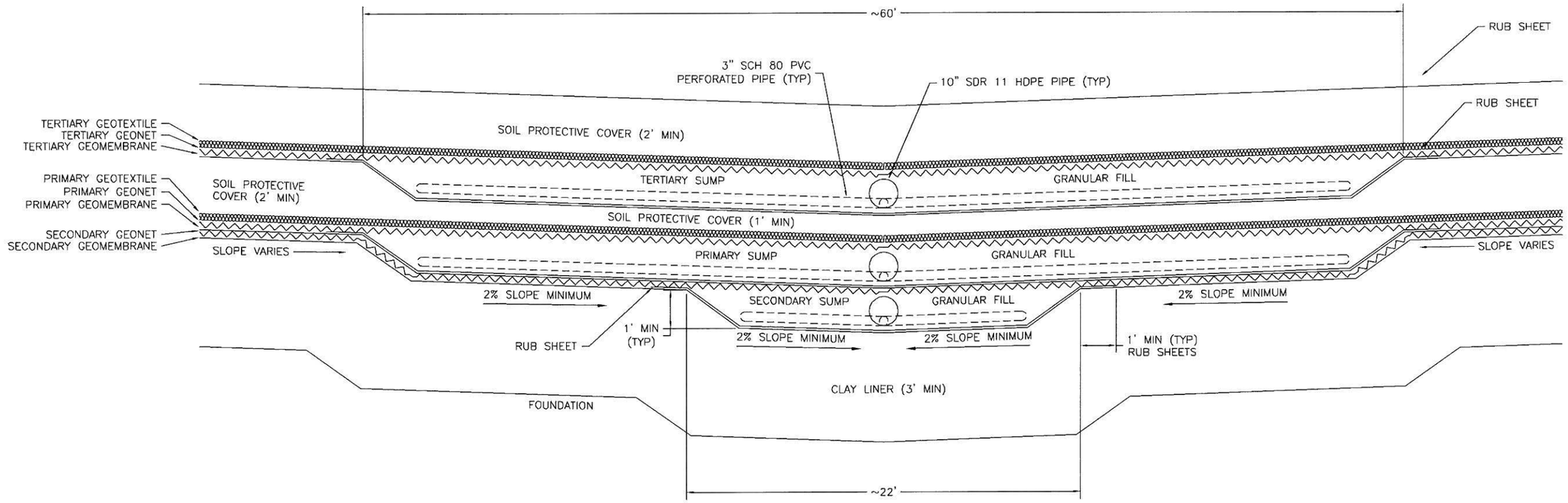

H C02 N-S EXPLODED SECTION THROUGH SLRP
NTS

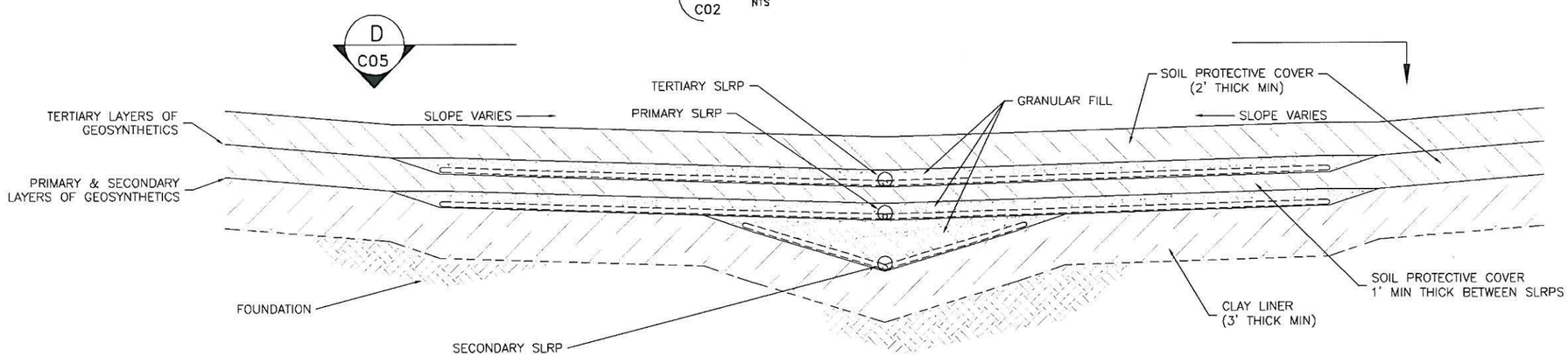

H C02 N-S CROSS SECTION THROUGH SLRP

4 0 4 8

NOTES:

1. DRAWING INCORPORATES INFORMATION FROM FORMER DRAWING 9401-6C, REV E.
2. DRAWING APPLIES ONLY TO PHASE V & VI CONSTRUCTION (CELLS 9A, 9B, 10A & 10B) AND FUTURE CELLS 11A, 11B, 12A AND 12B.
3. ALL SLOPES ~3:1 UNLESS OTHERWISE NOTED.
4. RUB SHEETS SHALL BE 60 MIL HDPE STITCH WELDED TO UNDERLYING GEOMEMBRANES.

LICENSED PROFESSIONAL ENGINEER
No. 189500
DAVID F BOOTH
6/17/11
STATE OF UTAH

DATE	BY	DESCRIPTION OF CHANGE
6/17/11	DFB	FOR LICENSE AMENDMENT

ENERGYSOLUTIONS

ENERGYSOLUTIONS "CLIVE" FACILITY
MIXED WASTE EMBANKMENT
LINER SECTIONS & DETAILS
CLIVE, UTAH

FINAL DRAWING

DRAWN BY D. BOOTH
REVIEWED BY G. DUTSON
APPROVED BY D. BOOTH
SCALE AS NOTED DATE 06/17/11 REV 1
DRAWING NO. 11009 C03

NOTES:

1. DRAWING INCORPORATES INFORMATION FROM FORMER DRAWING 9401-6B, REV F.
2. ALL SLOPES ARE ~3:1 UNLESS OTHERWISE SHOWN.
3. RUB SHEETS SHALL BE 60 MIL HDPE STITCH WELDED TO UNDERLYING GEOMEMBRANES.
4. TENCH CAPS SHALL EXTEND 1' (MIN) BEYOND RUB SHEETS AND BE WELDED (100%) TO PRIMARY AND SECONDARY LINERS.
5. 10" SLRP PIPES WILL BE EXTENDED DURING COVER CONSTRUCTION.
6. CONCRETE PIPE SUPPORT MAY BE REQUIRED TO BE REMOVED DURING COVER CONSTRUCTION.
7. DRAWING APPLIES ONLY TO PHASE V & VI (CELLS 9A, 9B, 10A & 10B) AND FUTURE CELLS 11A, 11B, 12A AND 12B.

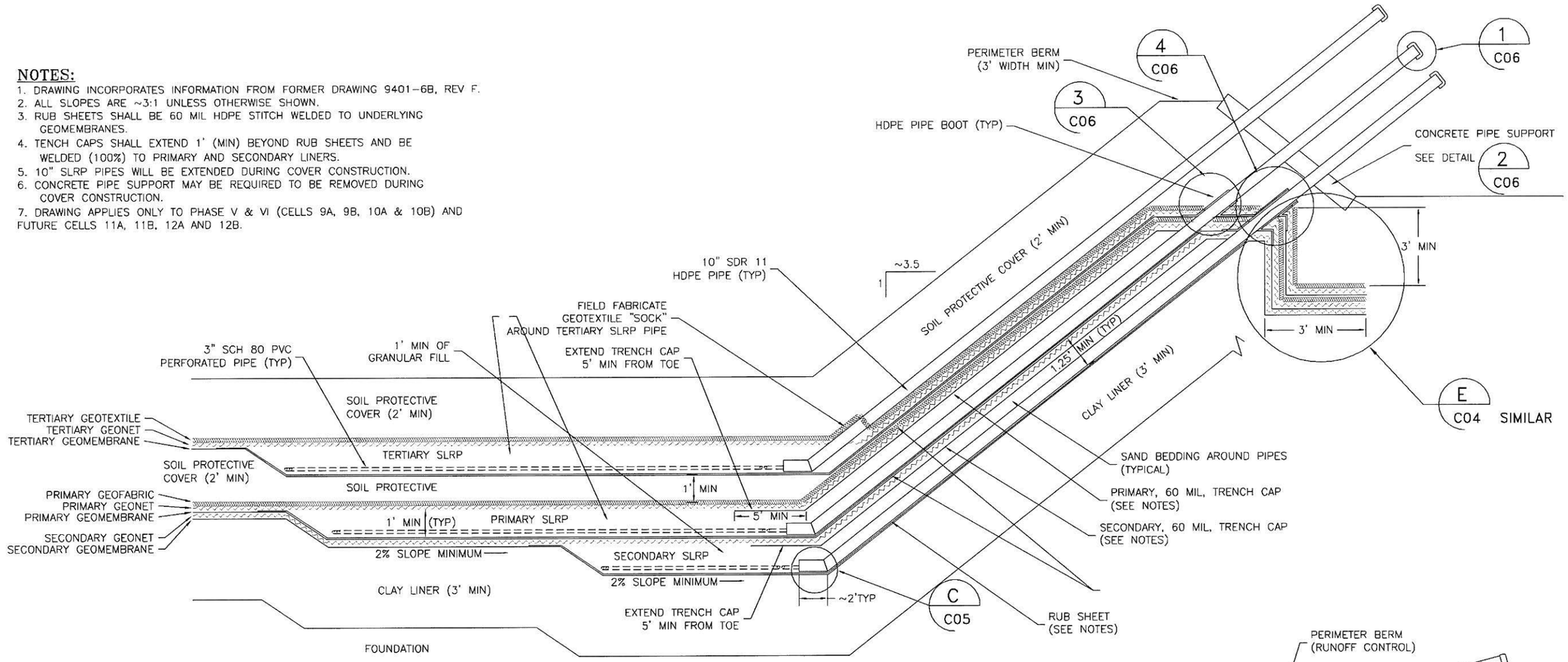

F C01 EXPLODED E-W SLRP CROSS SECTION
NTS

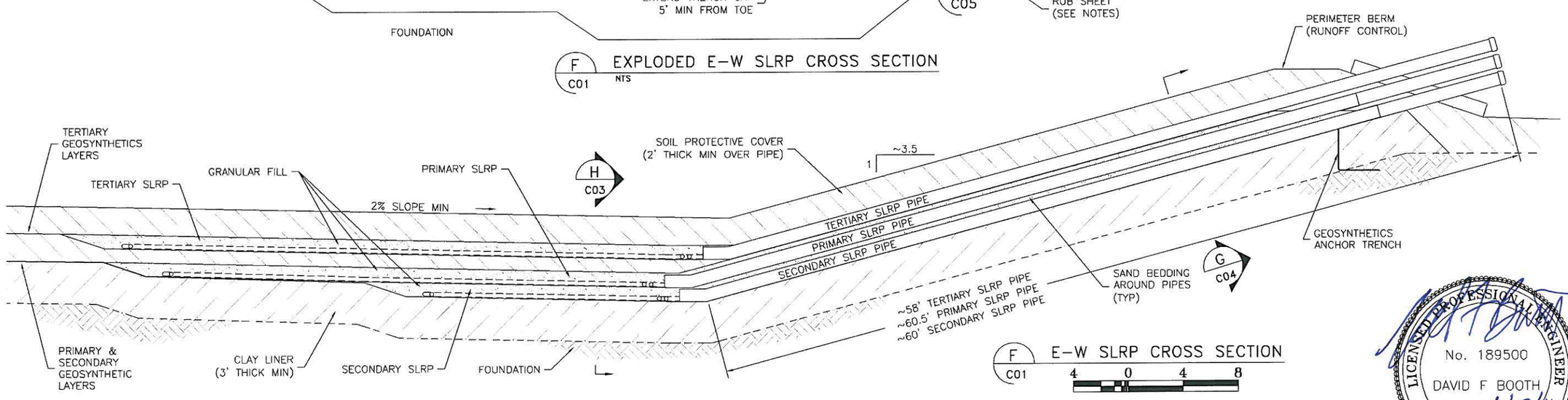

F C01 E-W SLRP CROSS SECTION
4 0 4 8

LICENSED PROFESSIONAL ENGINEER
No. 189500
DAVID F BOOTH
6/17/11
STATE OF UTAH

DATE	BY	DESCRIPTION OF CHANGE
6/17/11	DFB	FOR LICENSE AMENDMENT

ENERGYSOLUTIONS
ENERGYSOLUTIONS "CLIVE" FACILITY
MIXED WASTE EMBANKMENT
LINER SECTIONS & DETAILS
CLIVE, UTAH

FINAL DRAWING

DRAFTED BY D. BOOTH
REVIEWED BY G. DUTSON
APPROVED BY D. BOOTH
SCALE AS NOTED DATE 06/17/11 REV. 1
DRAWING NO. 11009 C02

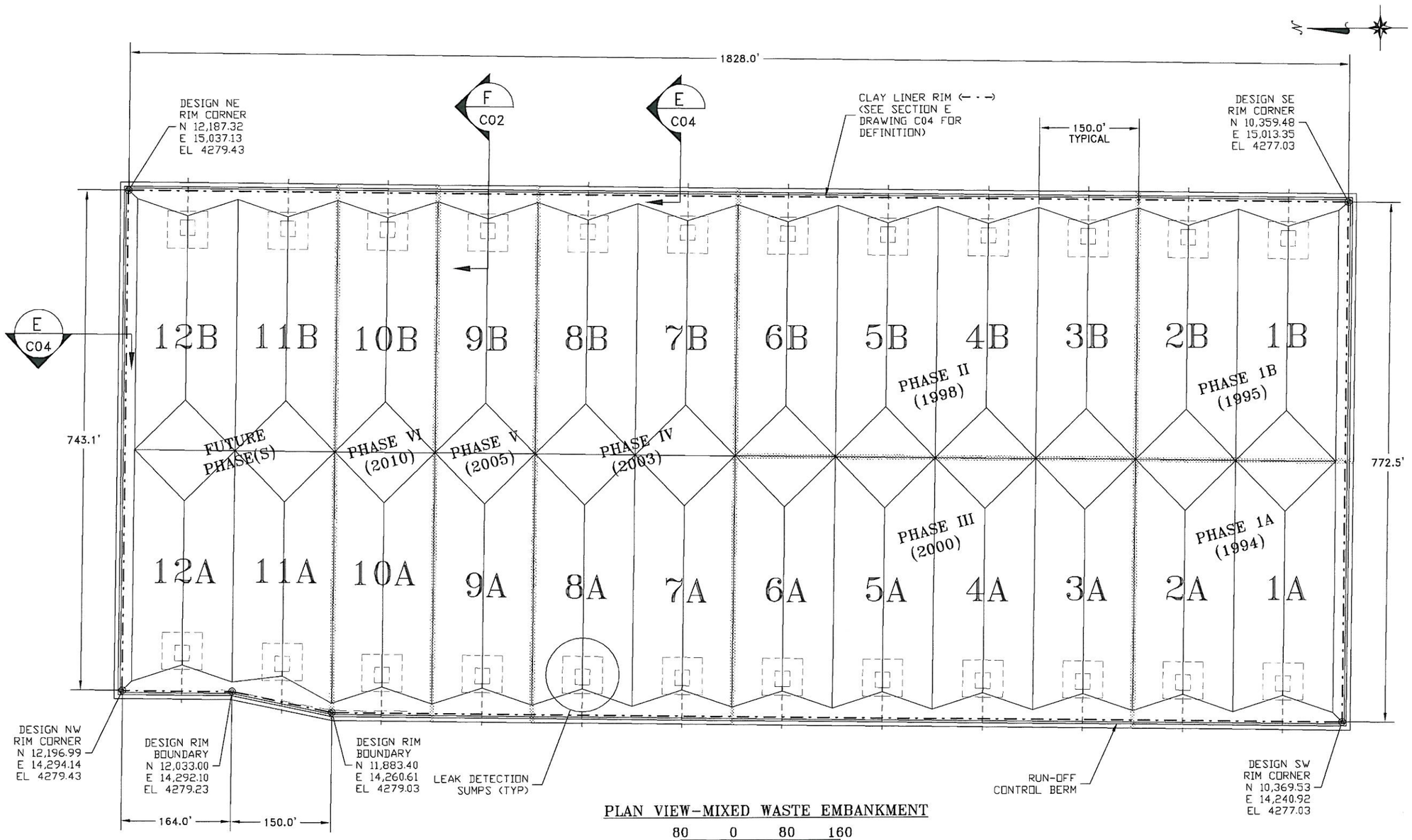

PLAN VIEW-MIXED WASTE EMBANKMENT

NOTES:

1. DRAWING INCORPORATES INFORMATION ON FORMER DRAWING 9401-6, REV T.
2. DRAWING DEPICTS TOP OF LINER PROTECTIVE COVER. REFER TO DRAWING C07 FOR ADDITIONAL DETAIL.
3. REFER TO CONSTRUCTION (PHASE) AS-BUILT REPORTS FOR AS-BUILT INFORMATION.
4. CELLS (SUMPS) 11B & 12B WILL FOLLOW THE SAME CONSTRUCTION PLAN AS CELLS 9B & 10B. CELLS 11A & 12A WILL BE SIMILAR TO 9A & 10A ALTHOUGH SHORTER AS SHOWN. DETAILED CONSTRUCTION PLANS AND SPECIFICATIONS WILL BE SUBMITTED TO THE STATE OF UTAH (DHSW) FOR REVIEW AND APPROVAL PRIOR TO CONSTRUCTION. THESE PLANS WILL CLEARLY DETAIL THE MODIFICATIONS TO CELLS 11A & 12A.

LICENSED PROFESSIONAL ENGINEER
No. 189500
DAVID F BOOTH
6/17/11
STATE OF UTAH

DATE	BY	DESCRIPTION OF CHANGE
6/17/11	DFB	FOR LICENSE AMENDMENT

ENERGYSOLUTIONS

ENERGYSOLUTIONS "CLIVE" FACILITY
MIXED WASTE EMBANKMENT
EMBANKMENT LINER LAYOUT
CLIVE, UTAH

FINAL DRAWING

DRAFTED BY D. BOOTH
REVIEWED BY G. OUTSON
APPROVED BY D. BOOTH
SCALE AS NOTED | DATE 06/17/11 | REV. 1
DRAWING NO. 11009 C01

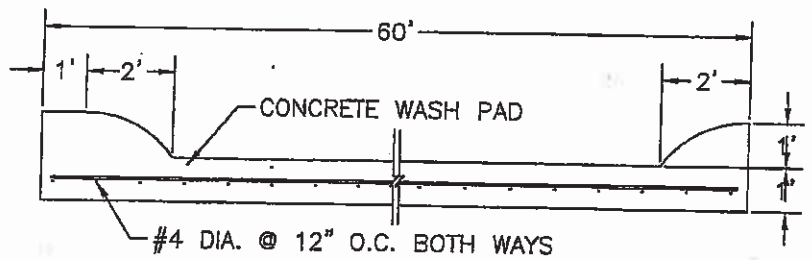

A 9517-1 OUTSIDE DECON WASH PAD
SCALE 1/2" = 1'

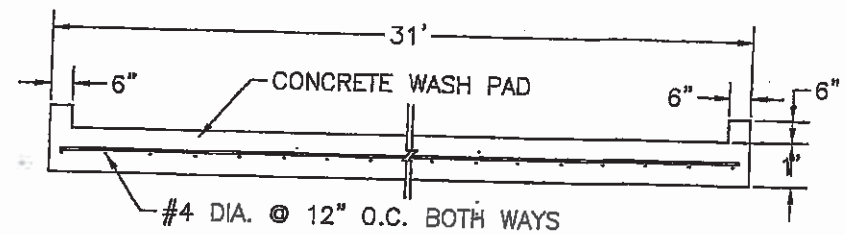

B 9517-1 OUTSIDE DECON WASH PAD
SCALE 1/2" = 1'

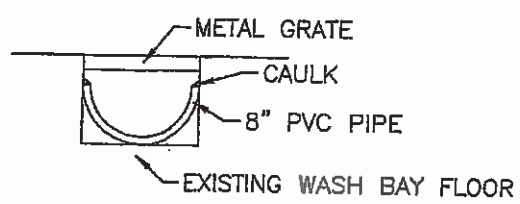

C 9517-1 INSIDE DRAIN TRENCH
SCALE 2" = 1'

DATE	INIT.	DESCRIPTION OF CHANGE
10/21/02	KL	RCRA PERMIT RENEWAL
12/18/00	KL	REMOVE TANKS
5/27/96	DCC	GENERAL UPDATE

ENVIROCARE OF UTAH, INC. THE SAFE ALTERNATIVE

DRAWN BY SJP
DESIGNED BY D. BOOTH
APPROVED BY D. SHOCKEY

MIXED WASTE STORAGE BUILDING
AND WASH PADS
WASH PAD DETAILS
CLIVE, UTAH

SCALE AS NOTED
DATE 6/16/95
DRAWING NO. 9517-3
REV. 0

DRAWINGS ARE REPRESENTATIVE OF CERTIFIED AS-BUILT AND PERMITTING DRAWINGS ON FILE WITH THE STATE.

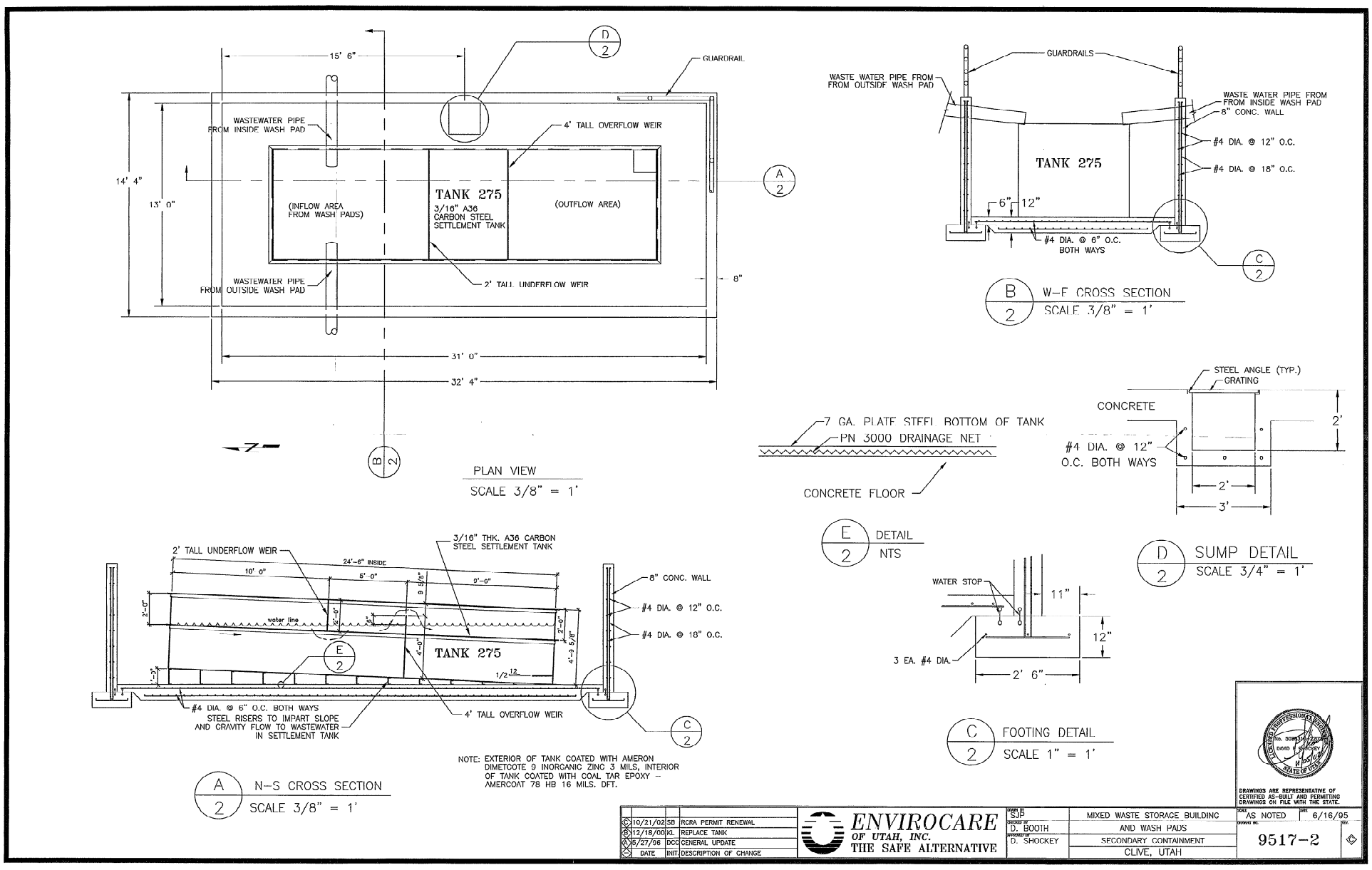
15' 6"
GUARDRAIL
WASTEWATER PIPE FROM INSIDE WASH PAD
4' TALL OVERFLOW WEIR
14' 4"
13' 0"
(INFLOW AREA FROM WASH PADS)
TANK 275
3/16" A36 CARBON STEEL SETTLEMENT TANK
(OUTFLOW AREA)
WASTEWATER PIPE FROM OUTSIDE WASH PAD
2' TALL UNDERFLOW WEIR
8"
31' 0"
32' 4"
PLAN VIEW
SCALE 3/8" = 1'
GUARDRAILS
WASTE WATER PIPE FROM FROM OUTSIDE WASH PAD
WASTE WATER PIPE FROM FROM INSIDE WASH PAD
8" CONC. WALL
#4 DIA. @ 12" O.C.
#4 DIA. @ 18" O.C.
TANK 275
6" 12"
#4 DIA. @ 6" O.C. BOTH WAYS
W-E CROSS SECTION
SCALE 3/8" = 1'
7 GA. PLATE STEEL BOTTOM OF TANK
PN 3000 DRAINAGE NET
CONCRETE FLOOR
DETAIL
NTS
STEEL ANGLE (TYP.)
GRATING
CONCRETE
#4 DIA. @ 12" O.C. BOTH WAYS
2'
3'
SUMP DETAIL
SCALE 3/4" = 1'
2' TALL UNDERFLOW WEIR
3/16" THK. A36 CARBON STEEL SETTLEMENT TANK
24'-6" INSIDE
10' 0"
5' 0"
9'-0"
8" CONC. WALL
#4 DIA. @ 12" O.C.
#4 DIA. @ 18" O.C.
water line
TANK 275
#4 DIA. @ 6" O.C. BOTH WAYS
STEEL RISERS TO IMPART SLOPE AND GRAVITY FLOW TO WASTEWATER IN SETTLEMENT TANK
4' TALL OVERFLOW WEIR
NOTE: EXTERIOR OF TANK COATED WITH AMERON DIMETCOTE 9 INORGANIC ZINC 3 MILS, INTERIOR OF TANK COATED WITH COAL TAR EPOXY - AMERCOAT 78 HB 16 MILS. DFT.
N-S CROSS SECTION
SCALE 3/8" = 1'
WATER STOP
11"
12"
3 EA. #4 DIA.
2' 6"
FOOTING DETAIL
SCALE 1" = 1'
DRAWINGS ARE REPRESENTATIVE OF CERTIFIED AS-BUILT AND PERMITTING DRAWINGS ON FILE WITH THE STATE.
10/21/02 SB RCRA PERMIT RENEWAL
12/18/00 KL REPLACE TANK
5/27/96 DCC GENERAL UPDATE
DATE INIT DESCRIPTION OF CHANGE
ENVIROCARE OF UTAH, INC. THE SAFE ALTERNATIVE
DRAWN BY SJP
DESIGNED BY D. BOOTH
APPROVED BY D. SHOCKEY
MIXED WASTE STORAGE BUILDING
AND WASH PADS
SECONDARY CONTAINMENT
CLIVE, UTAH
SCALE AS NOTED
DATE 6/16/95
DRAWING NO. 9517-2
REV.

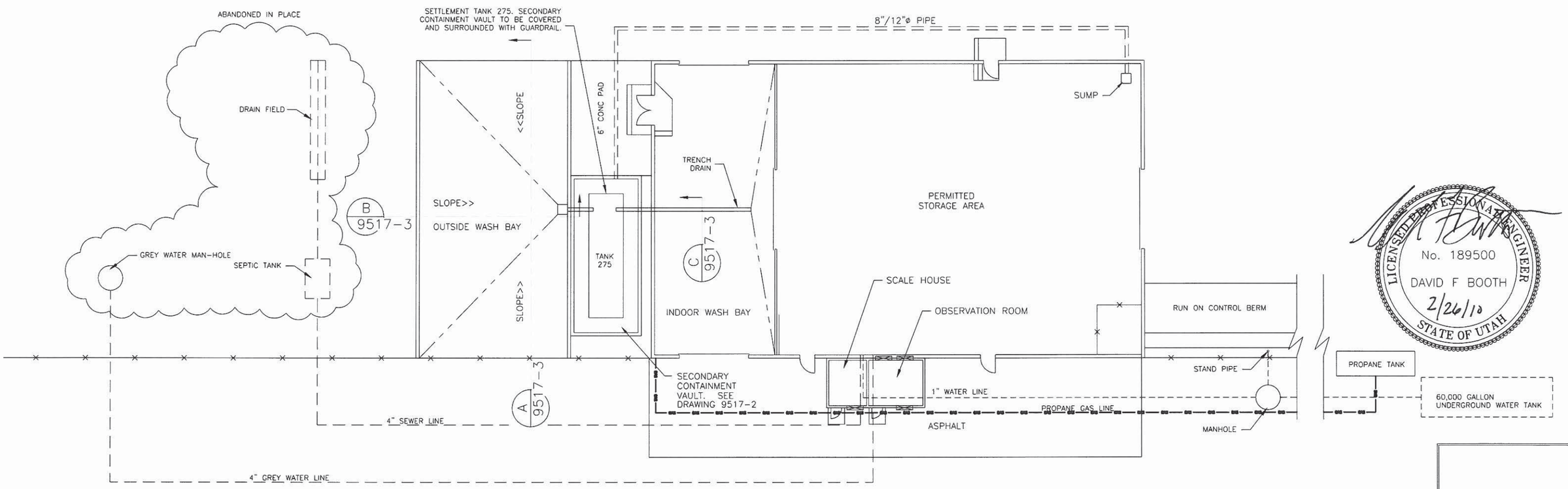

PLAN VIEW

SCALE IN FEET
10 0 10 20

LEGEND
- - - WATER SUPPLY
— — DIRTY WATER
—■— PROPANE SUPPLY

			D	10/21/02	SB	RCRA PERMIT RENEWAL
			C	12/18/00	KL	REPLACED TANK
			B	5/27/96	DCC	GENERAL UPDATE
			A	8/21/95	SJP	ADD 2ND CONTAINMENT PIPE
E	2/26/10	DFB	UPDATED FOR VTD MODIFICATIONS			
				DATE	INIT.	DESCRIPTION OF CHANGE

ENERGYSOLUTIONS

DRAWN BY: SJP
CHECKED BY: D. BOOTH
APPROVED BY: D. SHOCKEY

MIXED WASTE STORAGE BUILDING
BUILDING AND WASH PAD LAYOUT
PLAN VIEW
CLIVE, UTAH

SCALE: AS NOTED
DATE: 6/16/95
DRAWING NO.: 9517-1
REV: E

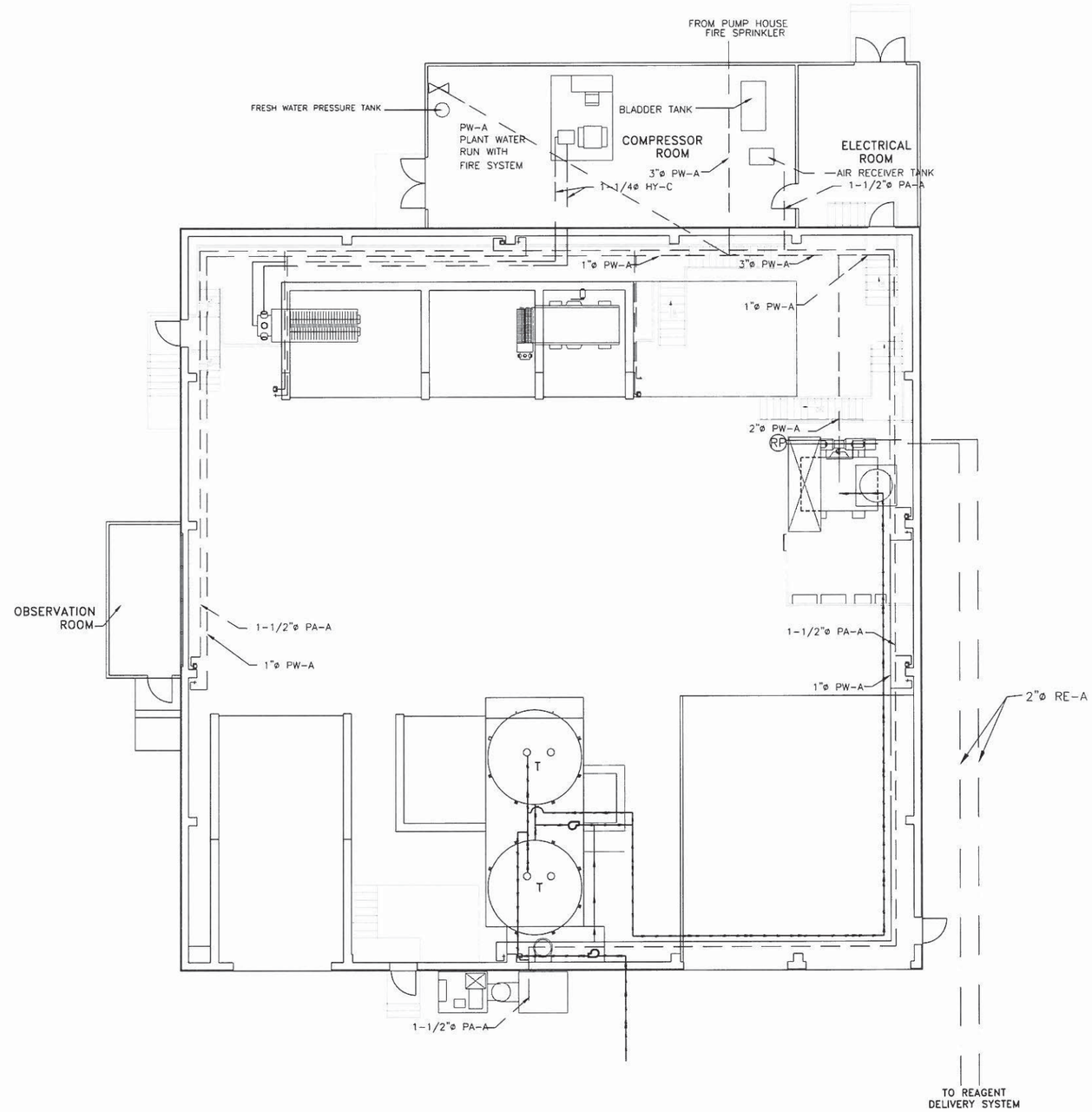

MIXED WASTE TREATMENT BUILDING

SCALE: 1/8" = 1'-0"

NOTES:
1. LINE IDENTIFICATION
   SIZE"øLIQUID–PIPE MATERIAL
   A. SIZE: 1" ø THROUGH 4"ø
   B. SERVICE:
      PW – PLANT WATER
      PA – PLANT AIR
      DW – DIRTY WATER
      HY – HYDRAULIC FLUID
      RE – REAGENT
   C. PIPE MATERIAL:
      A – CARBON STEEL
      B – HIGH–MED. DENSITY POLYETHYLENE
      C – HYDRAULIC LINE
      D – RUBBER QUICK–CONNECT HOSE

KEY
- (SP) SUMP PUMP
- (RP) REAGENT PUMP
- MANUAL VALVE
- AIR HOSE CONNECTION W/VALVE
- HOSE BIB
- PUMP
- WATER
- LIQUID WASTE
- (T) TANK

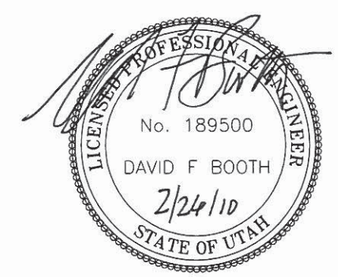

				2	7/17/02	KL	REMOVE LIQ. WASTE HOLDING TANK
				1	9/8/94	SJP	MOVED SILOS
4	2/26/10	DFB	ADDED LIQ. TREAT. TANKS & PIPING	0	10/19/93	JRH	FOR CONSTRUCTION
3	10/21/02	KL	RCRA PERMIT RENEWAL	A	7/26/93	WSG	PRELIMINARY FOR REVIEW
–	DATE	INIT.	DESCRIPTION OF CHANGE	–	DATE	INIT.	DESCRIPTION OF CHANGE

ENERGYSOLUTIONS

DRAWN BY WSG	MIXED WASTE TREATMENT BUILDING	SCALE 1/8"=1'-0"	DATE 07/29/93
CHECKED BY D. BOOTH	PROCESS PIPING LAYOUT	DRAWING NO. 9317-PP01	REV 4
APPROVED BY D. SHOCKEY	–		
	CLIVE, UTAH		

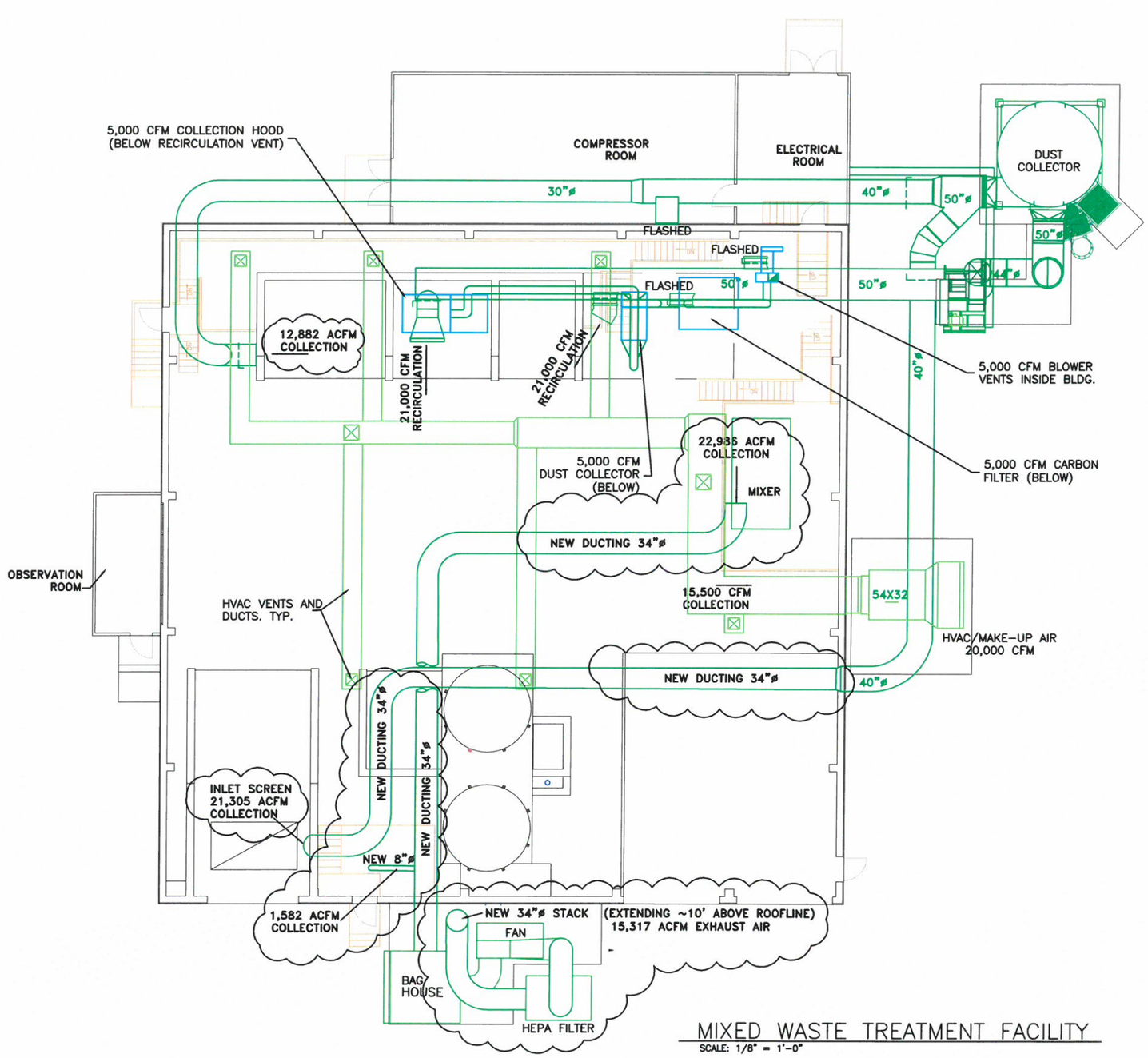

MIXED WASTE TREATMENT FACILITY

SCALE: 1/8" = 1'-0"

NOTES:

1. NEW DUCTWORK REFERENCED IN DRAWINGS PROVIDED BY PROCESS CONTROL EQUIPMENT CO., DATED 05/14/15.
2. AIRFLOW READINGS PROVIDED IN AN EMAIL TO BRENNON DICK FROM PROCESS CONTROL EQUIPMENT CO., DATED 08/19/15.

LICENSED PROFESSIONAL ENGINEER
GARRETT Q. DUTSON
No. 189706
08/25/15
STATE OF UTAH

0 8 16 24
12 0
1/8"=1'-0"

				10	02/08/05	SB	LIQUID WASTE TANKS ADDED	6	7/17/02	KL	REMOVE LIQ. WASTE HOLDING TANK	2	1/6/94	–	41'-0" WAS 61'-0"
				9	3/21/03	DFB	REVISED RCRA PERMIT SUBMITTAL	5	5/4/94	SJP	MOVE SHREDDERS; DRAW ON ACAD	1	11/18/93	–	CHANGED NORTH ORIENTATION
				8	3/6/03	KL	CHANGED DWG. TITLE	4	2/13/95	SJP	AS-BUILTS – INIT. CONSTRUCTION	0	10/18/93	–	CERTIFIED
12	08/25/15	GQD	VENTILATION SYSTEM UPGRADE	7	10/21/02	KL	RCRA PERMIT RENEWAL	3	5/4/94	SJP	MOVE SHREDDERS; DRAW ON ACAD	X	8/23/93	–	FOR APPROVAL
11	8/26/14	DFB	PRELIMINARY DESIGN CHANGE		DATE	INIT.	DESCRIPTION OF CHANGE		DATE	INIT.	DESCRIPTION OF CHANGE		DATE	INIT.	DESCRIPTION OF CHANGE

ENERGYSOLUTIONS

DRAWN BY ROMANOWSKI	MIXED_WASTE_TREATMENT_BUILDING	SCALE 1/8"=1'0"	DATE 4/21/03
CHECKED BY D.BOOTH	DUST_COLLECTION_&		
APPROVED BY K.HAWKINS	VENTILATION_SYSTEM	DRAWING NO. 9317-M2	REV. 12
	CLIVE, UTAH		

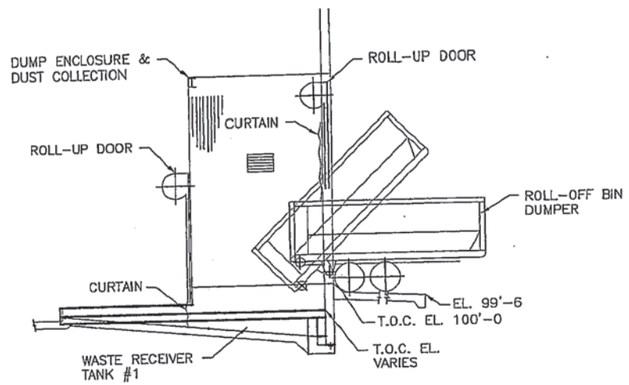

SECTION D 9317-L102

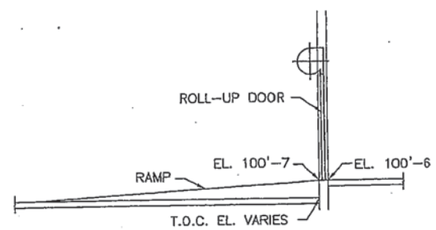

SECTION C 9317-L102

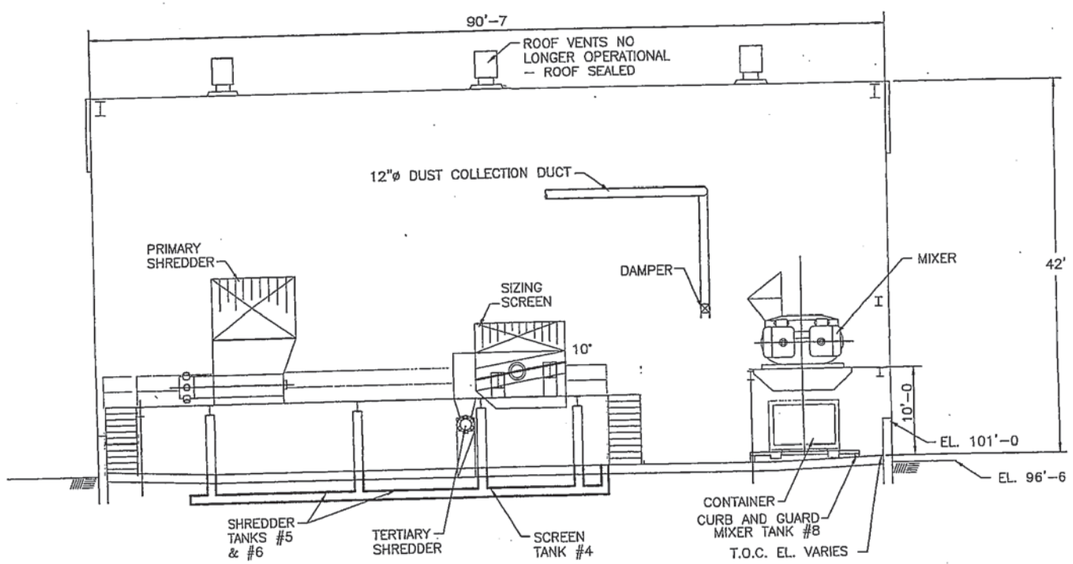

SECTION A 9317-L102

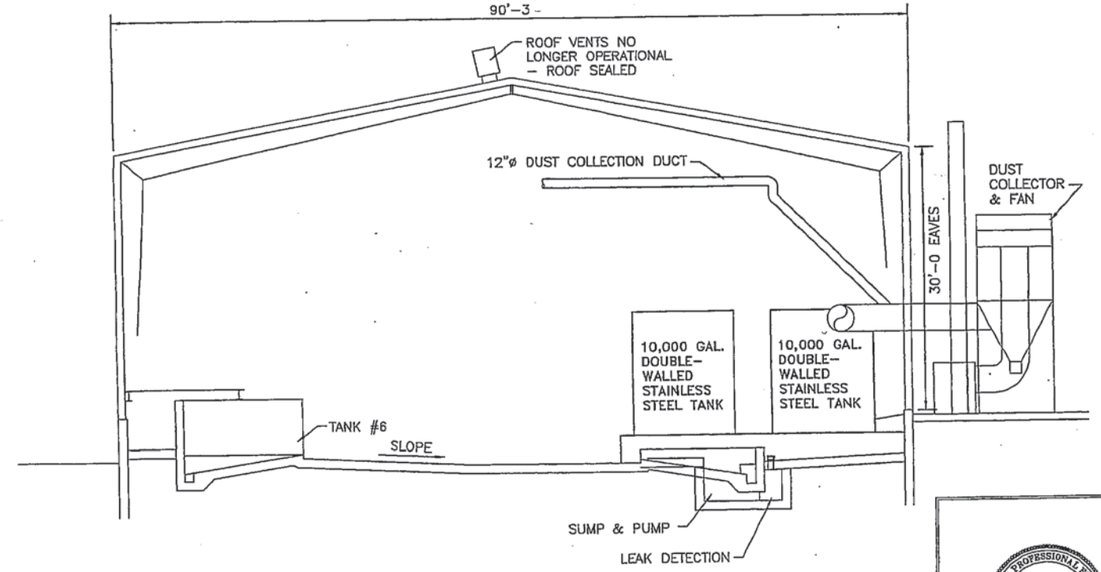

SECTION B 9317-L102

0 8 16 24
1/8"=1'-0"

LICENSED PROFESSIONAL ENGINEER No. 189763-2202 KENT T. HAWKINS 4/4/05 STATE OF UTAH

DRAWINGS ARE REPRESENTATIVE OF CERTIFIED AS-BUILT AND PERMITTING DRAWINGS ON FILE WITH THE STATE.

DATE	INIT.	DESCRIPTION OF CHANGE
02/02/05	SB	LIQUID WASTE TANKS
10/21/02	KL	RCRA PERMIT RENEWAL
7/17/02	KL	REMOVE LIQ. WASTE HOLDING TANK
4/2/99	JSP	ADD ROOF VENT NOTE
5/12/95	SJP	REMOVE FUTURE INSTALLATIONS
4/4/95	GWH	ADD DUST COLLECTOR TO MIXER
2/13/95	SJP	AS-BUILTS - INIT. CONSTRUCTION
5/4/94	SJP	MOVE SHREDDERS; DRAW ON ACAD
2/3/94	-	ADJUSTED COL. LINES
10/18/93	-	CERTIFIED
7/6/93	-	PUMP & BLOWER BLDG
6/24/93	-	ADJUSTED BLDG. DIMENSIONS
6/5/93	-	GENERAL UPDATE
5/21/93	-	GENERAL UPDATE

ENVIROCARE OF UTAH, INC. THE SAFE ALTERNATIVE

DRAWN BY: MERRELL
DESIGNED BY: D.BOOTH
APPROVED BY: K.HAWKINS

MIXED WASTE TREATMENT BUILDING
BUILDING SECTIONS
-
CLIVE, UTAH

SCALE: 1/8"=1'-0" DATE: 04/26/93
DRAWING NO.: 9317-L103 REV.: 0

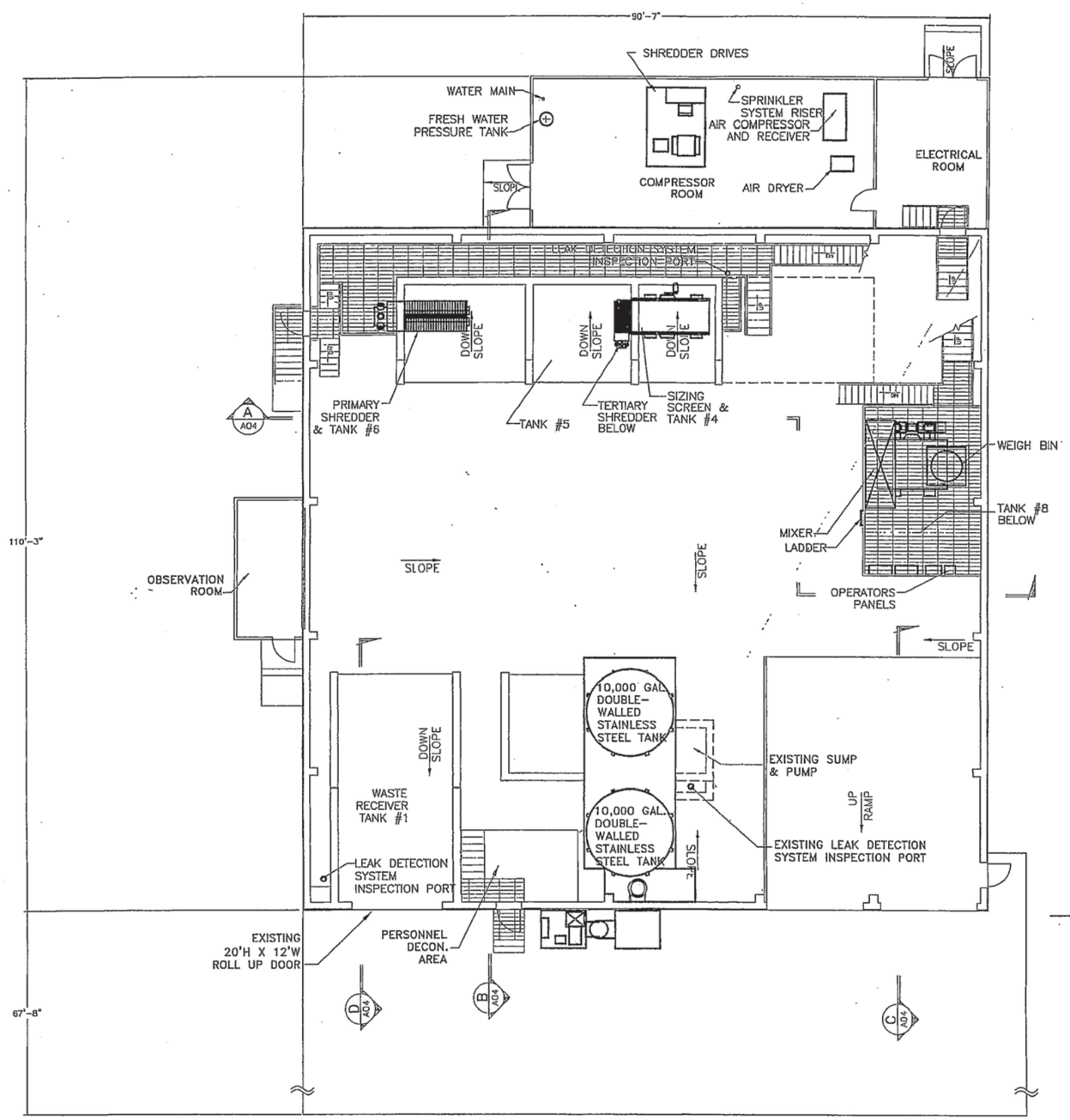

MIXED WASTE TREATMENT BUILDING

SCALE: 1/8" = 1'-0"

0 8 16 24
12 0
1/8"=1'-0"

LICENSED PROFESSIONAL ENGINEER No. 189763-2202 KENT T. HAWKINS 2/2/05 STATE OF UTAH

DRAWINGS ARE REPRESENTATIVE OF CERTIFIED AS-BUILT AND PERMITTING DRAWINGS ON FILE WITH THE STATE.

DATE	INIT.	DESCRIPTION OF CHANGE
9 02/02/05	SB	LIQUID WASTE TANKS
8 10/21/02	KL	RCRA PERMIT RENWAL
7 7/17/02	KL	REMOVE LIQ. WASTE HOLDING TANK

DATE	INIT.	DESCRIPTION OF CHANGE
6 2/13/95	SJP	AS-BUILTS – INIT. CONSTRUCTION
5 5/4/94	SJP	MOVE SHREDDERS; DRAW ON ACAD
4 2/19/93	–	ROTATED STAIR @ CB
3 2/3/94	–	ADJUSTED COL. LINES

DATE	INIT.	DESCRIPTION OF CHANGE
2 1/6/94	–	41'-0" WAS 65'-0"
1 11/15/93	–	CHANGE NORTH ARROW
0 10/18/93	–	CERTIFIED
F 8/9/93	–	GENERAL UPDATE

DATE	INIT.	DESCRIPTION OF CHANGE
6 7/6/93	–	PUMP & BLOWER BLDG
6 6/24/93	–	ADJUSTED BLDG. DIMENSIONS
6 5/5/83	–	GENERAL UPDATE
6 5/20/93	–	GENERAL UPDATE

ENVIROCARE OF UTAH, INC.
THE SAFE ALTERNATIVE

DRAWN BY K. LUTZ
DESIGNED BY D. BOOTH
APPROVED BY K.HAWKINS

MIXED WASTE TREATMENT BUILDING
BUILDING PLAN
CLIVE, UTAH

SCALE AS NOTED
DATE 00/00/00
DRAWING NO. 9317-L102
REV. 9

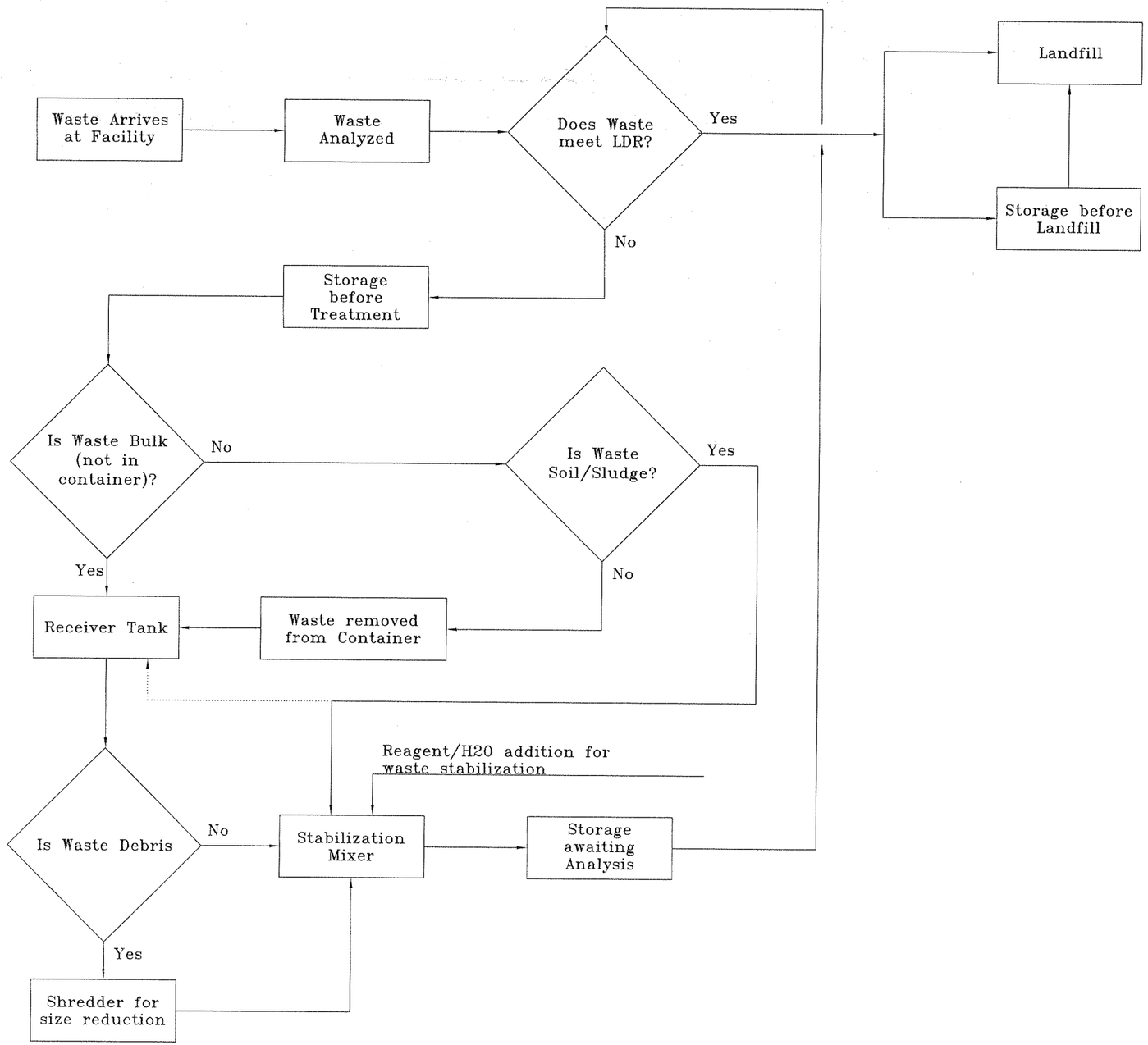

LICENSED PROFESSIONAL ENGINEER
NO. 189500
DAVID F BOOTH
10/4/12
STATE OF UTAH

REV	DATE	BY	DESCRIPTION OF CHANGE
2	10/4/12	DFB	REGENERATED FOR RCRA PART B RENEWAL 2012 (NO CHANGES)
1	02/02/05	SB	LIQUID WASTE TANKS

ENERGYSOLUTIONS

MIXED WASTE TREATMENT BUILDING
RCRA PERMIT DRAWINGS
STABILIZATION PROCESS FLOW CHART
CLIVE, UTAH

DRAFTED BY: K. LUTZ
REVIEWED BY: D. BOOTH
APPROVED BY: D. SHOCKEY
SCALE: NONE
DATE: 10/21/02
REV.: 2
DRAWING NO.: FS1 9317

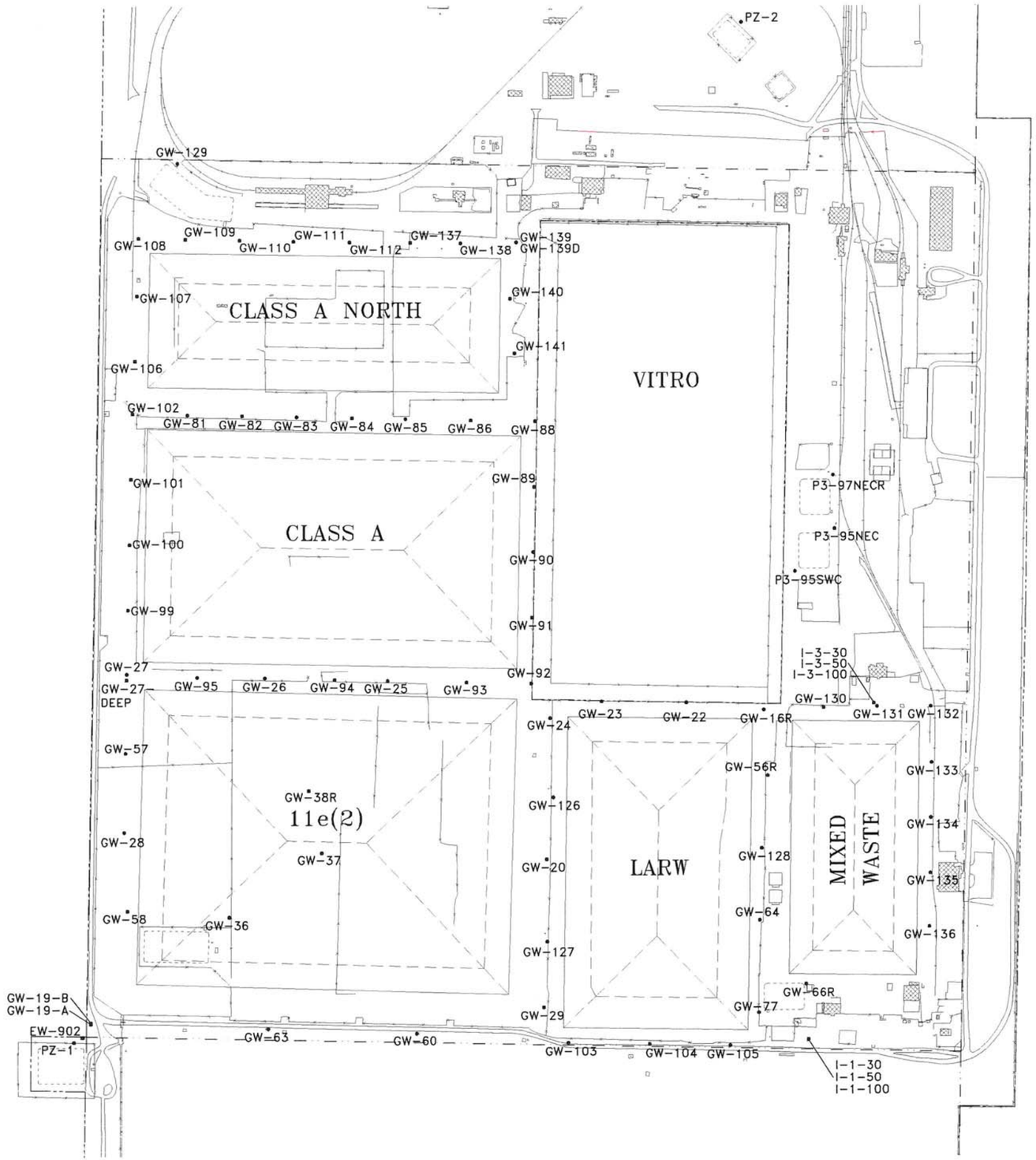

N

LEGEND

- FENCE
- ROAD
- PROPERTY LINE
- RAILROAD
- SECTION LINE
- PERMITTED EMBANKMENT LIMITS
- EMBANKMENT EARTHWORK BREAK LINES
- GROUNDWATER MONITORING WELL

360 0 360 720

LICENSED PROFESSIONAL ENGINEER
No. 189500
DAVID F BOOTH
3/2/11
STATE OF UTAH

	DATE	BY	DESCRIPTION OF CHANGE
3	3/2/11	DFB	REMOVED GW #1, 42, 55, 67, 67R, 68, 68R, 69, 69R, 70, 113, 114, 115, 116, 117, 118, 119, 121, 122, 123R, 124, 125
2	2/18/10	DFB	ADDED WELLS GW-130 THROUGH GW-141
1	10/15/07	DFB	ADDED GW-129
0	3/26/07	DGS	FOR PERMIT ONLY

ENERGYSOLUTIONS

"CLIVE" FACILITY

ENERGYSOLUTIONS SITE FACILITIES

GROUNDWATER MONITORING WELLS

CLIVE, UTAH

DRAFTED BY D.BOOTH

REVIEWED BY R.SOBOCINSKI

APPROVED BY D.BOOTH

SCALE AS SHOWN | DATE 3/26/07 | REV. 3

DRAWING NO. 07007 J02

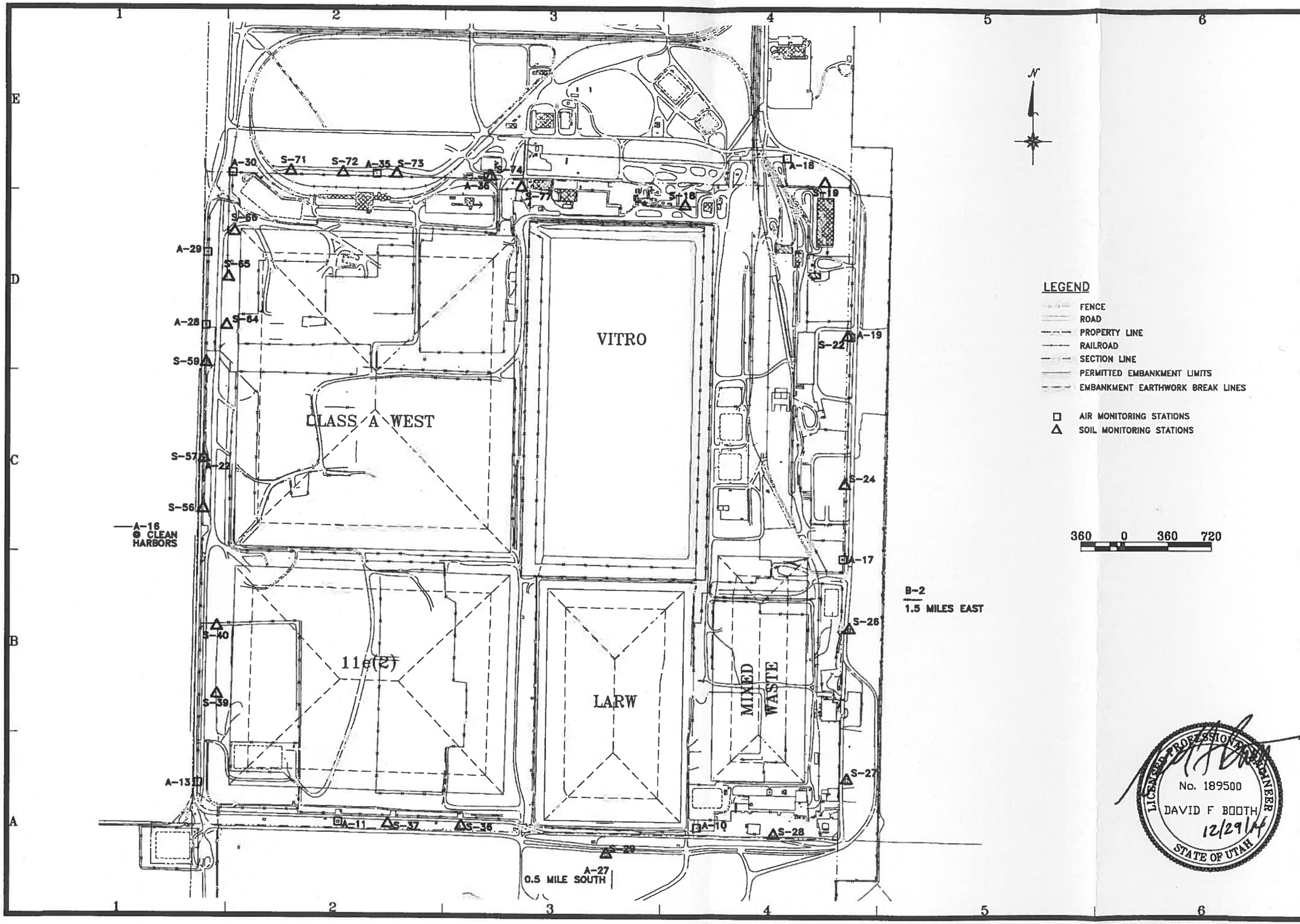

9	12/29/14	DFB	2014 UPDATE
8	11/19/13	DFB	RELOCATED AIR STATION 1-13 & UPDATED FOR CLASS A WEST
7	1/5/12	DFB	REPLACED THE PREVIOUSLY REMOVED AIR STATION A-8
6	9/29/10	DFB	MOVED S-19 FURTHER NORTH AND REMOVED S-20
5	2/18/10	DFB	UPDATED TOPOGRAPHY
4	11/3/08	DFB	DELETED B-1, S-41; ADDED S-76, S-78, A-27
3	9/16/08	DFB	ADDED SOIL STATIONS S-75, S-76 & S-77 AND AIR STATION A-37
2	6/18/07	DFB	MOVED V-17 TO THE WEST AND SOUTH
1	5/22/07	DFB	ANNUAL UPDATE: REMOVED A-25, MOVED S-18, ADDED V-17
0	03/16/07	DCS	FOR PERMIT ONLY - RELOCATED A-25
	DATE	BY	DESCRIPTION OF CHANGE

ENERGYSOLUTIONS

"CLIVE" FACILITY

ENERGYSOLUTIONS SITE FACILITIES

ENVIRONMENTAL MONITORS

CLIVE, UTAH

LICENSED PROFESSIONAL ENGINEER
No. 189500
DAVID F BOOTH
12/29/14
STATE OF UTAH

DRAWN BY	D.BOOTH
CHECKED BY	W.JOHNS
DESIGNED BY	D.BOOTH
SCALE	AS SHOWN 05/22/07
DWG. NO.	07007 J01

SECTION 28
TOWNSHIP 1S, R11

SECTION 33
TOWNSHIP 1S, R11

SECTION 4
TOWNSHIP 2S, R11

40°41'44.086" N
113°06'20.109" W
EL 4280.83

40°40'51.879" N
113°06'20.011" W
EL 4277.27

40°41'40.836" N
113°06'34.653" W
EL 4281.7

40°41'12.381" N
113°06'34.663" W
EL 4278.2

VITRO EMBANKMENT

40°41'40.839" N
113°06'54.173" W
EL 4280.0

40°41'12.382" N
113°06'54.179" W
EL 4277.8

SECTION 29
TOWNSHIP 1S, R11

SECTION 32
TOWNSHIP 1S, R11

LICENSED FOR CLASS A
LLRW MANAGEMENT

SECTION 5
TOWNSHIP 2S, R11

ENERGYSOLUTIONS
PROPERTY LINE
(TYPICAL)

40°41'44.098" N
113°07'28.654" W
EL 4273.06

40°40'51.890" N
113°07'28.580" W
EL 4269.76

SECTION 6
TOWNSHIP 2S, R11

SECTION 30
TOWNSHIP 1S, R11

SECTION 31
TOWNSHIP 1S, R11

SECTION LINE
(TYPICAL)

500 0 500 1000

LICENSED PROFESSIONAL ENGINEER
No. 189500
DAVID F BOOTH
2/26/10
STATE OF UTAH

DATE	BY	DESCRIPTION OF CHANGE
2/26/10	DFB	CORRECTED SECTION CORNER COORDINATES TO MATCH RML LICENSE
2/16/09	DFB	2009 UPDATE – FOR INFORMATION ONLY
3/26/08	DFB	FOR INFORMATION ONLY

ENERGYSOLUTIONS

"CLIVE" FACILITY
ENERGYSOLUTIONS SITE FACILITIES
SECTION AND PROPERTY MAP
CLIVE, UTAH

FOR INFORMATION ONLY

DRAFTED BY D.BOOTH
REVIEWED BY G.DUTSON
APPROVED BY D.BOOTH
SCALE AS SHOWN DATE 03/19/08 REV.

DRAWING NO. 0801 G05

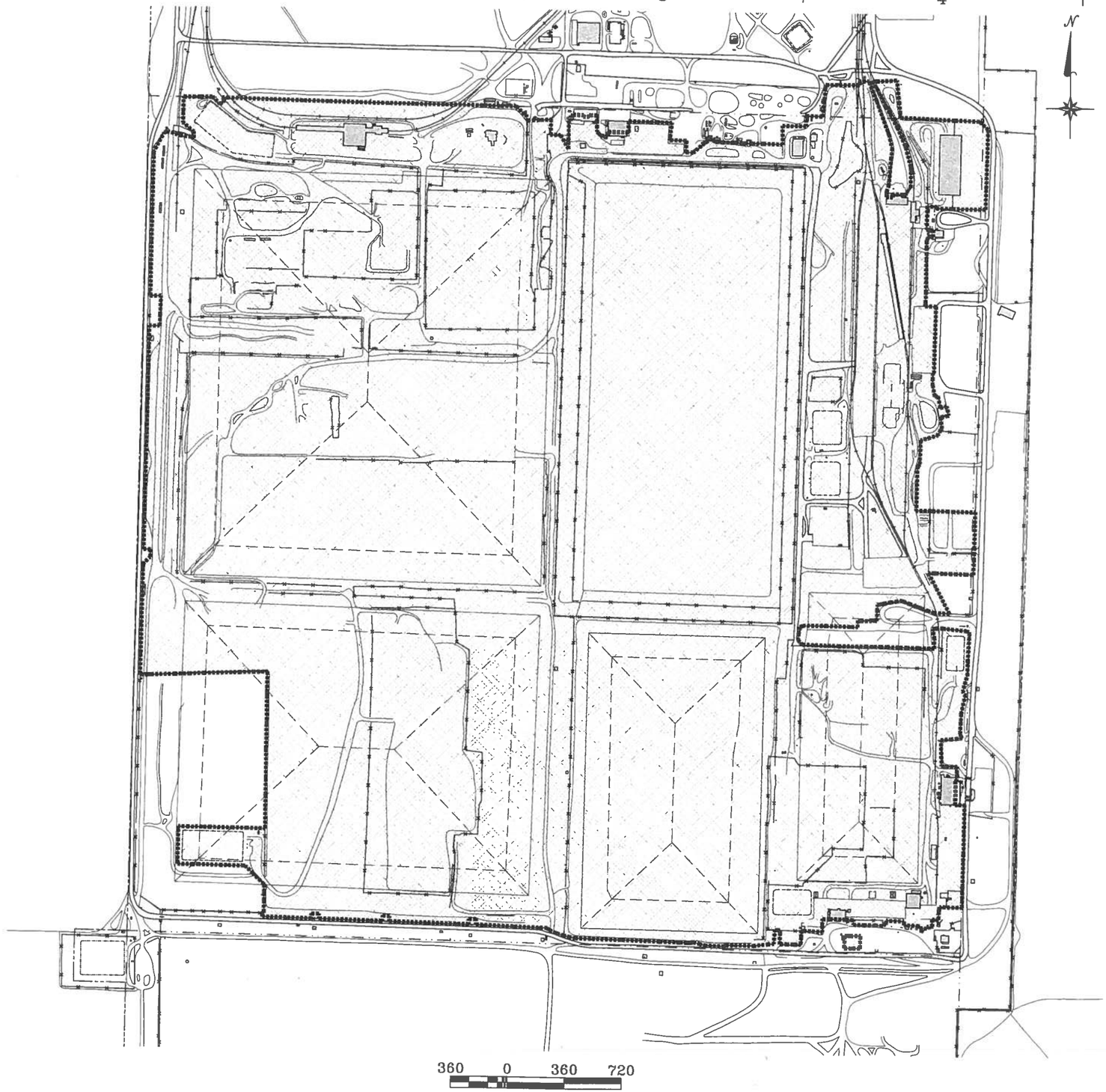

LEGEND

- FENCE
- RAILROAD
- SECTION LINE
- PERMITTED EMBANKMENT LIMITS
- EMBANKMENT BREAK LINES
- PROPERTY LINE
- BUILDING
- ROAD, IMPROVED
- ROAD, GRAVEL
- PONDS
- AREA OF RESTRICTED ACCESS

NOTE:
RESTRICTED AREA BOUNDARY IS CURRENT AS OF 10/27/2017.

LICENSED PROFESSIONAL ENGINEER
No. 189500
DAVID F BOOTH
10/27/17
STATE OF UTAH

DATE	BY	DESCRIPTION OF CHANGE
10/27/17	DFB	2017 UPDATE – FOR INFORMATION ONLY
12/22/14	DFB	2014 UPDATE – FOR INFORMATION ONLY
11/19/13	DFB	2013 UPDATE – FOR INFORMATION ONLY
11/29/11	DFB	2011 UPDATE (BASE MAP) – FOR INFORMATION ONLY
5/2/11	DFB	2010 UPDATE (AUG) – FOR INFORMATION ONLY, INCL NEW OPS & DU STORAGE BLDGS
2/26/10	DFB	2010 UPDATE – FOR INFORMATION ONLY
2/17/09	DFB	2009 UPDATE – FOR INFORMATION ONLY
3/26/08	DFB	FOR INFORMATION ONLY

ENERGYSOLUTIONS

"CLIVE" FACILITY
ENERGYSOLUTIONS SITE FACILITIES
RESTRICTED ACCESS AREA
CLIVE, UTAH

FOR INFORMATION ONLY

DRAWN BY D.BOOTH
REVIEWED BY G.DUTSON
APPROVED BY D.BOOTH
SCALE AS SHOWN DATE 03/19/08 REV
DRAWING NO. 0801 G04

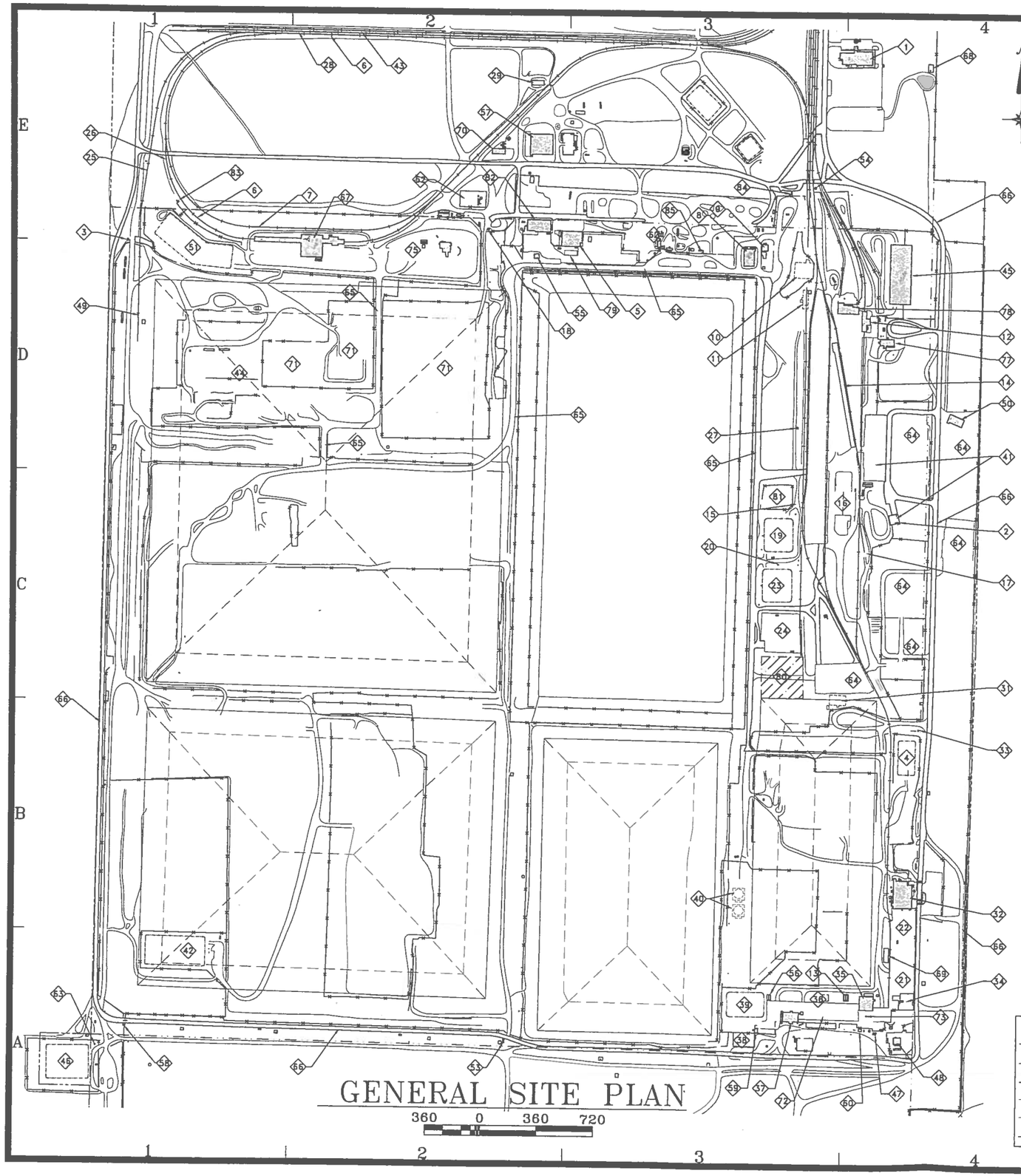

1. ADMINISTRATION BUILDING
DRAWING SERIES 05041
2. EAST LLRW TRUCK UNLOADING FACILITY
HP SHACK
3. NORTH ACCESS CONTROL SHACK
4. MIXED WASTE SURFACE IMPOUNDMENT
DRAWING SERIES 11014
5. LARW OPERATIONS BUILDING
DRAWING SERIES 9532, 03049, 04014, 04021
6. TRACK A RAIL LOOP
DRAWING SERIES 05024
7. TRACK B RAIL SIDING
DRAWING SERIES 05024
8. INSIDE LLRW MAINTENANCE SHOP
9. INSIDE LLRW MAINTENANCE BAY
10. FORMER RAIL CAR ROLLOVER, (DEMOLISHED 2013)
DWG SERIES 9512, 0133, 0221, 0244, 04001, 04018
11. TRACK #2 RAIL WASH FACILITY (DEMOLISHED OCTOBER 2011) DRAWING SERIES 9513
12. TRACK #4 RAIL WASH FACILITY
DRAWING SERIES 9906, 06007
13. MIXED WASTE EVAPORATION TANKS #175 & #200
DRAWING SERIES 9535
14. RAIL CAR DIGGING FACILITY (DIGGING TRACK)
DRAWING SERIES 0107
15. INTERMODAL UNLOADING FACILITY LIFT STATION
DRAWING SERIES 9822
16. INTERMODAL UNLOADING FACILITY
DRAWING SERIES 9705, 04003
17. TRACK HOE RAMP
DRAWING SERIES 0107
18. CWF GUARD SHACK
19. 97 LARW EVAPORATION POND
DRAWING SERIES 9718, 03063
20. POND DRAIN LIFT STATION
DRAWING SERIES 9817, 03063
21. MIXED WASTE CONTAINER HOLDING PAD
DRAWING SERIES 9803, 9834
22. MIXED WASTE EAST CONTAINER STORAGE AREA
DRAWING SERIES 9803, 9834
23. 95 LARW EVAPORATION POND
DRAWING SERIES 9504, 03063, 08007
24. LARW CONTAINER STORAGE PAD
DRAWING SERIES 9514
25. WEST RAIL SPUR (LARGE COMPONENT TRACK)
DRAWING SERIES 0241
26. NW RAIL ACCESS CONTROL SHACK
27. STORM WATER LIFT SUMP
DRAWING SERIES 06007
28. EAST-WEST RAIL SIDING
DRAWING SERIES 05024
29. MAINTENANCE/STORAGE BUILDING
30. RESERVED
31. BOX WASHING FACILITY (DEMOLISHED 2014)
DRAWING SERIES 9621, 9622, 9822
32. MIXED WASTE OPERATIONS BUILDING
DRAWING SERIES 9713, 0240
33. MIXED WASTE SAND TRANSFER
ACCESS CONTROL SHACK
34. MIXED WASTE UNLOADING DOCK
DRAWING SERIES 9846
35. MIXED WASTE TREATMENT BUILDING
DWG SERIES 9317,9619,0132,0227,0249,0257,03023
36. MIXED WASTE CENTRAL CONTAINER STORAGE AREA
DRAWING SERIES 9516, 9922
37. MIXED WASTE STORAGE (VTD) BUILDING
DRAWING SERIES 9417, 9517, 0248
38. BOX COUNTING PAD
DRAWING SERIES 9833
39. MIXED WASTE EVAPORATION POND
DRAWING SERIES 9802
40. MIXED WASTE EVAPORATION TANKS #225 & #250
DRAWING SERIES 9616 (DEMOLISHED 2013)
41. EAST LLRW TRUCK UNLOADING FACILITY
DRAWING SERIES 03024, 04046, 05023
42. 2000 LARW EVAPORATION POND
DRAWING SERIES 0006
43. LADDER TRACK #2
DRAWING SERIES 07010
44. CLASS A NORTH LARGE COMPONENT AREA
DRAWING SERIES 04080
45. DU STORAGE BUILDING
DRAWING SERIES 10008
46. SOUTHWEST CORNER EVAPORATION POND
DRAWING SERIES 9721, 04047
47. PNEUMATIC REAGENT DELIVERY SYSTEM
DRAWING SERIES 9618
48. MIXED WASTE MAINTENANCE WELD SHOP
49. LARGE COMPONENT UNLOADING PAD
DRAWING SERIES 0241
50. TRUCK SURVEY FACILITY
DRAWING SERIES 15006
51. NORTHWEST CORNER EVAPORATION POND
DRAWING SERIES 06021
52. SUBSTATION
DRAWING SERIRES 05056
53. SOUTH ACCESS CONTROL SHACK
54. EAST SIDE RAIL ACCESS CONTROL SHACK
55. SAFETY SUPPLY SHED
56. MIXED WASTE EVAPORATION TANKS #150 & #125
DRAWING SERIES 9519
57. PURCHASING/ WAREHOUSE/ MAINTENANCE BUILDING
DRAWING SERIES 03096
58. SOUTH GATE SECURITY SHACK
59. WASTE ASSAY COUNTING SYSTEMS BUILDING
60. MIXED WASTE FIRE PUMP BUILDING
61. RESERVED
62. BATCH PLANT (2008 RE-LOCATION SHOWN)
DRAWING SERIES 03055, 04022, 07009
63. VITRO STORM WATER OUTLET
DRAWING SERIES 9721, 04047
64. EMPTY CONTAINER STORAGE AREAS
65. WASTE HAUL ROADS
DRAWING SERIES 05049
66. PERIMETER ROAD
DRAWING SERIES 05049
67. ROTARY DUMP FACILITY (THAW, ROTARY & WASH)
DRAWINGS SERIRES 05006
68. METEOROLOGICAL STATION
DRAWING SERIES 06020
69. MIXED WASTE RAIL UNLOADING DOCK
DRAWING SERIES 9402
70. QC & GW LABORATORIES BUILDING
DRAWING SERIES 08006
71. CLASS A WEST CONTAINERIZED WASTE AREAS
DRAWING SERIES 04080 & 10014
72. MIXED WASTE SOUTH CONTAINER STORAGE AREA
73. MIXED WASTE SOUTHEAST CONTAINER STORAGE AREA
DRAWING SERIES 03023
74. RESERVED
75. SHREDDER FACILITY
DRAWING SERIES 05056
76. RESERVED
77. DECON ACCESS CONTROL BUILDING
DRAWING SERIES 05015, 06007
78. INTERMODAL CONTAINER WASH FACILITY
DRAWING SERIES 05008, 06007
79. LARW OPERATIONS TRUCK WASH PAD
DRAWING SERIES 04011
80. BULK STORAGE PAD (DEMOLISHED JUNE, 2006)
DRAWING SERIES 9412
81. LLRW BONE YARD
82. LLRW OPERATIONS BUILDING
DRAWING SERIES 07015
83. RAIL GUARD SHACK
84. WATER TOWER (WELL/SALT WATER SUPPLY)
85. MAGNESIUM CHLORIDE STORAGE/TRANSFER

LEGEND

- FENCE
- RAILROAD
- SECTION LINE
- PERMITTED EMBANKMENT LIMITS
- EMBANKMENT BREAK LINES
- PROPERTY LINE
- BUILDING
- ROAD, IMPROVED
- ROAD, GRAVEL
- PONDS

LICENSED PROFESSIONAL ENGINEER
No. 189500
DAVID F BOOTH
11/16/17
STATE OF UTAH

	DATE	BY	DESCRIPTION OF CHANGE
8	11/16/17	DFB	2017 UPDATE - FOR INFORMATION ONLY
7	12/22/14	DFB	2014 UPDATE - FOR INFORMATION ONLY
6	11/19/13	DFB	2013 UPDATE - FOR INFORMATION ONLY
5	2/29/12	DFB	REMOVED REFERENCE TO MW EMPTY CONTAINER STORAGE PAD (FACILITY DECOMMISSIONED)
4	11/29/11	DFB	2011 UPDATE (ADDED B3, B4 & B5) - FOR INFORMATION ONLY
3	2/26/10	DFB	2010 UPDATE - FOR INFORMATION ONLY
2	2/17/09	DFB	2009 UPDATE - FOR INFORMATION ONLY
1	3/26/08	DFB	FOR INFORMATION ONLY

ENERGYSOLUTIONS
ENERGYSOLUTIONS "CLIVE" FACILITY
CLIVE DISPOSAL FACILITY
SITE LAYOUT AND FACILITY LEGEND
CLIVE, UTAH

FOR INFORMATION ONLY

DRAFTED BY D.BOOTH
REVIEWED BY G.DUTSON
APPROVED BY D.BOOTH
SCALE AS SHOWN DATE 03/19/08 REV. 8
DRAWING NO. 0801 G03

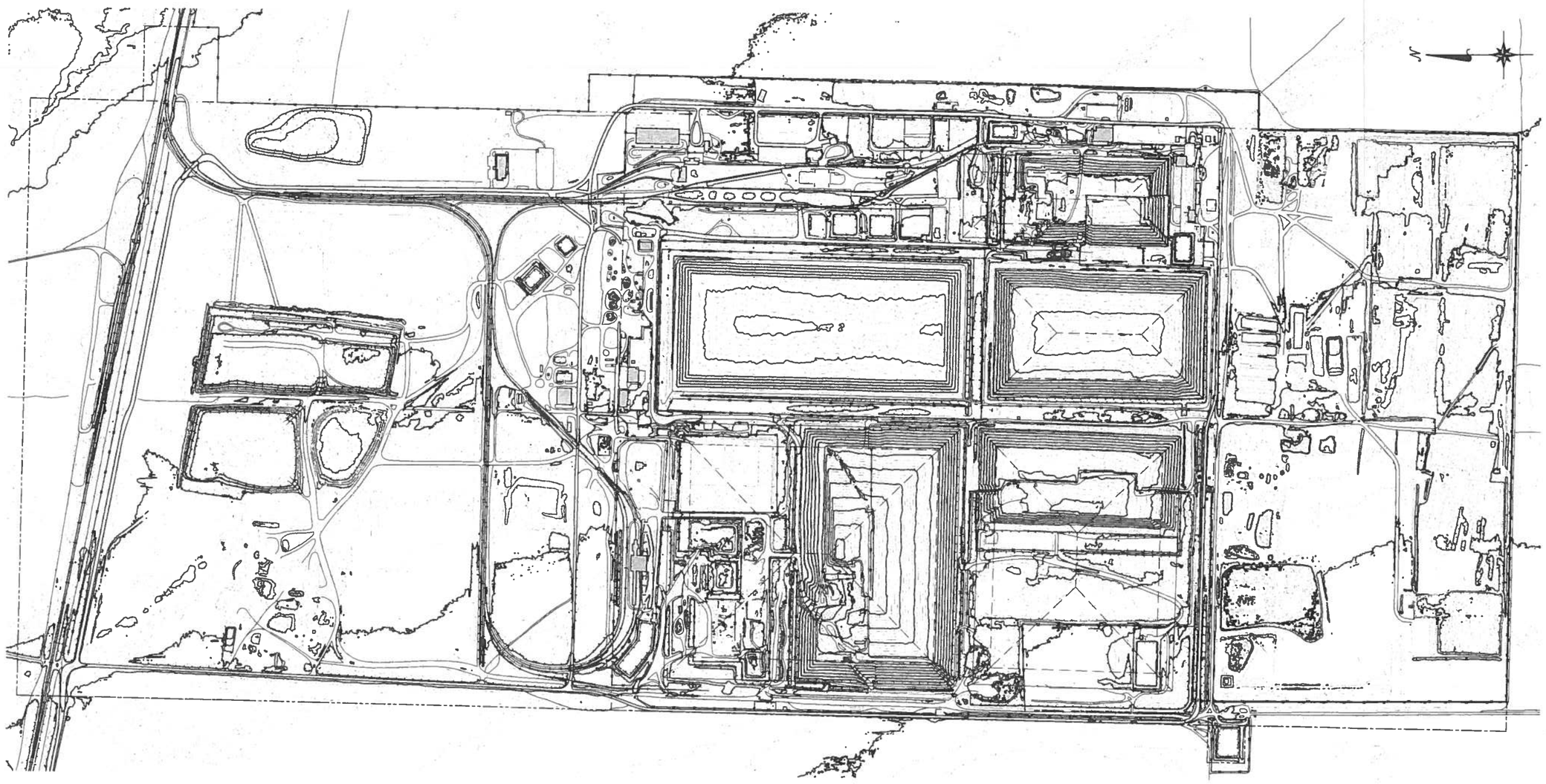

500 250 0 500 1000

NOTE:
CONTOUR INFORMATION IS BASED ON AN AERIAL SITE SURVEY PERFORMED 08/16/2017 BY AERO-GRAPHICS, INC.

LEGEND

- FENCE
- RAILROAD
- SECTION LINE
- PERMITTED EMBANKMENT LIMITS
- EMBANKMENT BREAK LINES
- PROPERTY LINE
- BUILDING
- ROAD, IMPROVED
- ROAD, GRAVEL
- PONDS
- 10 FT CONTOUR

LICENSED PROFESSIONAL ENGINEER
No. 189500
DAVID F BOOTH
10/27/17
STATE OF UTAH

DATE	BY	DESCRIPTION OF CHANGE
10/27/17	DFB	2017 UPDATE – FOR INFORMATION ONLY
12/22/14	DFB	2014 UPDATE – FOR INFORMATION ONLY
11/19/13	DFB	2013 UPDATE – FOR INFORMATION ONLY
11/29/11	DFB	2011 UPDATE – FOR INFORMATION ONLY
5/2/11	DFB	2010 UPDATE (AUG) – FOR INFORMATION ONLY
2/26/10	DFB	2010 UPDATE – FOR INFORMATION ONLY
2/17/09	DFB	2009 UPDATE – FOR INFORMATION ONLY
5/26/08	DFB	FOR INFORMATION ONLY

ENERGYSOLUTIONS

"CLIVE" FACILITY
ENERGYSOLUTIONS SITE FACILITIES
TOPOGRAPHY OF PERMITTED AREA
CLIVE, UTAH

FOR INFORMATION ONLY

DRAFTED BY D.BOOTH
DESIGNED BY G.DUTSON
APPROVED BY D.BOOTH
SCALE AS SHOWN DATE 03/19/08 REV. 7
DRAWING NO. 0801 G02

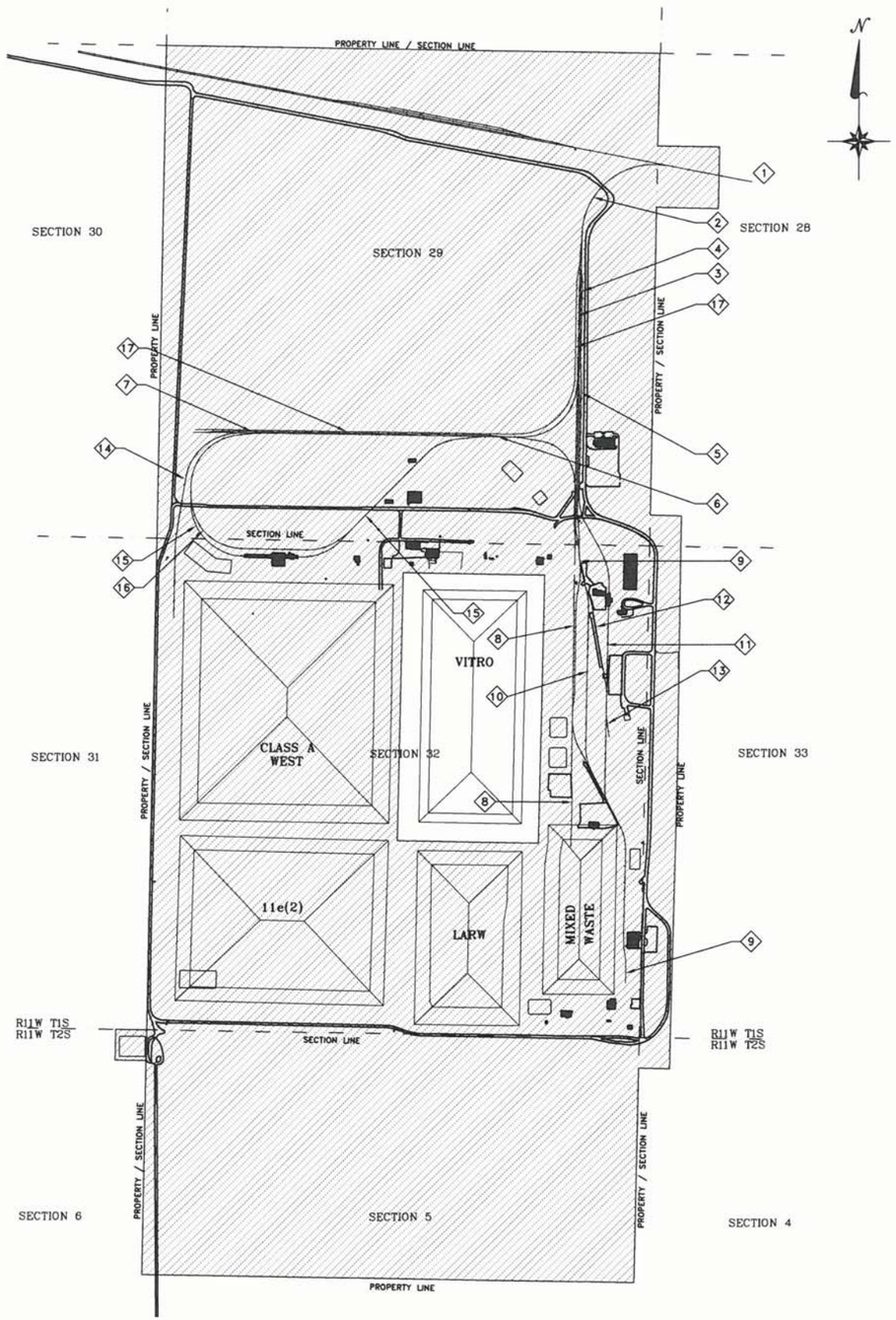

ENERGYSOLUTIONS SITE FACILITIES

DWG. NO.	DESCRIPTION
0801-G01	PROPERTY AREA AND RAILROAD TRACKS
0801-G02	TOPOGRAPHY OF PERMITTED AREA
0801-G03	FACILITY LAYOUT AND STRUCTURES
0801-G04	RESTRICTED ACCESS AREA
0801-G05	SECTION AND PROPERTY MAP
07007-J01	ENVIRONMENTAL MONITORS
07007-J02	GROUNDWATER MONITORING WELLS

LEGEND

- PROPERTY LINE
- RAILROAD
- SECTION LINE
- ENERGYSOLUTIONS PROPERTY

KEYNOTES

1. UNION PACIFIC MAIN RAIL LINE (RIGHT-OF-WAY NOT SHOWN)
2. ENERGYSOLUTIONS PRIMARY RAIL LINE
3. ENERGYSOLUTIONS SECONDARY RAIL
4. ENERGYSOLUTIONS TERTIARY RAIL LINE
5. ENERGYSOLUTIONS QUARTERNARY RAIL
6. ENERGYSOLUTIONS RAIL LINE N1
7. ENERGYSOLUTIONS RAIL LINE N2
8. ENERGYSOLUTIONS RAIL LINE #1
9. ENERGYSOLUTIONS RAIL LINE #2
10. ENERGYSOLUTIONS RAIL LINE #3
11. ENERGYSOLUTIONS RAIL LINE #4
12. CROSSOVER RAIL #3 TO RAIL #4
13. TRACK-HOE RAMP SPUR
14. WEST RAIL SPUR
15. ENERGYSOLUTIONS TRACK A
16. ENERGYSOLUTIONS TRACK B
17. ENERGYSOLUTIONS LADDER TRACK #2

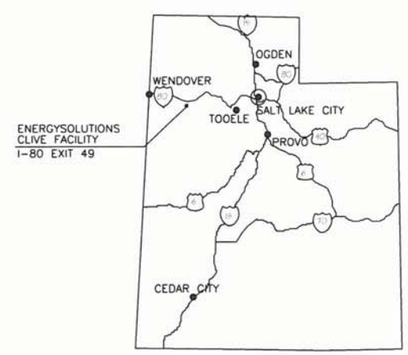

UTAH VICINITY MAP

LICENSED PROFESSIONAL ENGINEER
No. 189500
DAVID F BOOTH
11/19/13
STATE OF UTAH

DATE	BY	DESCRIPTION OF CHANGE
11/19/13	DFB	2013 UPDATE - FOR INFORMATION ONLY
03/2/11	DFB	2010 UPDATE (AUG) - FOR INFORMATION ONLY
02/17/10	DFB	2010 UPDATE - FOR INFORMATION ONLY
02/17/09	DFB	2009 UPDATE - FOR INFORMATION ONLY
03/26/08	DFB	FOR INFORMATION ONLY

ENERGYSOLUTIONS

"CLIVE" FACILITY
ENERGYSOLUTIONS SITE FACILITIES
PROPERTY WITH RAIL LINES
CLIVE, UTAH

FOR INFORMATION ONLY

DRAFTED BY D.BOOTH
REVIEWED BY G.DUTSON
APPROVED BY D.BOOTH
SCALE AS SHOWN DATE 03/19/08 REV. 4
DRAWING NO. 0801 G01

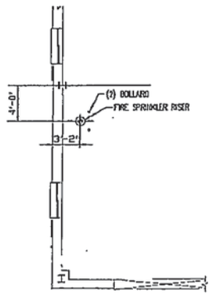

NW PARTIAL SHOP AREA FLOOR PLAN

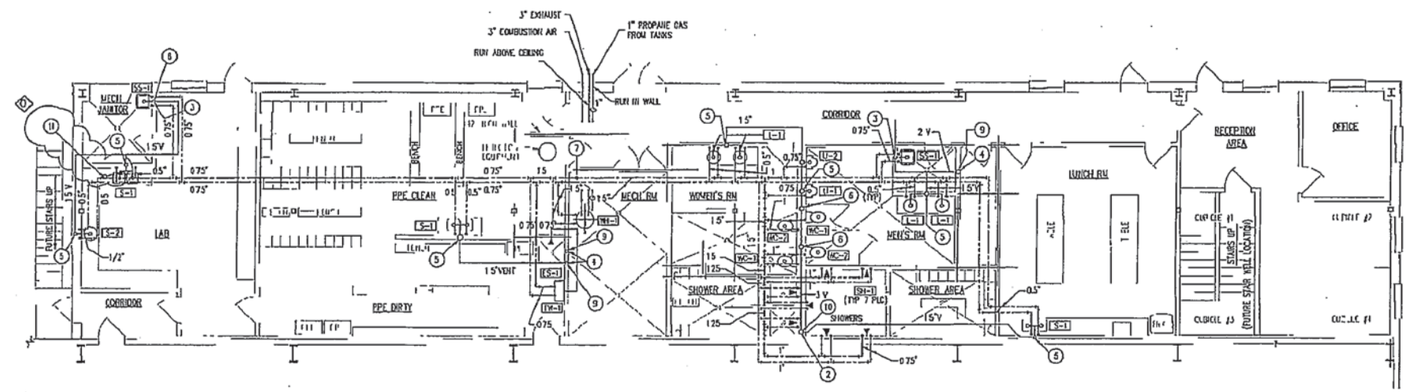

OFFICE / LAB AREA FLOOR PLAN

ABOVE SLAB PLUMBING

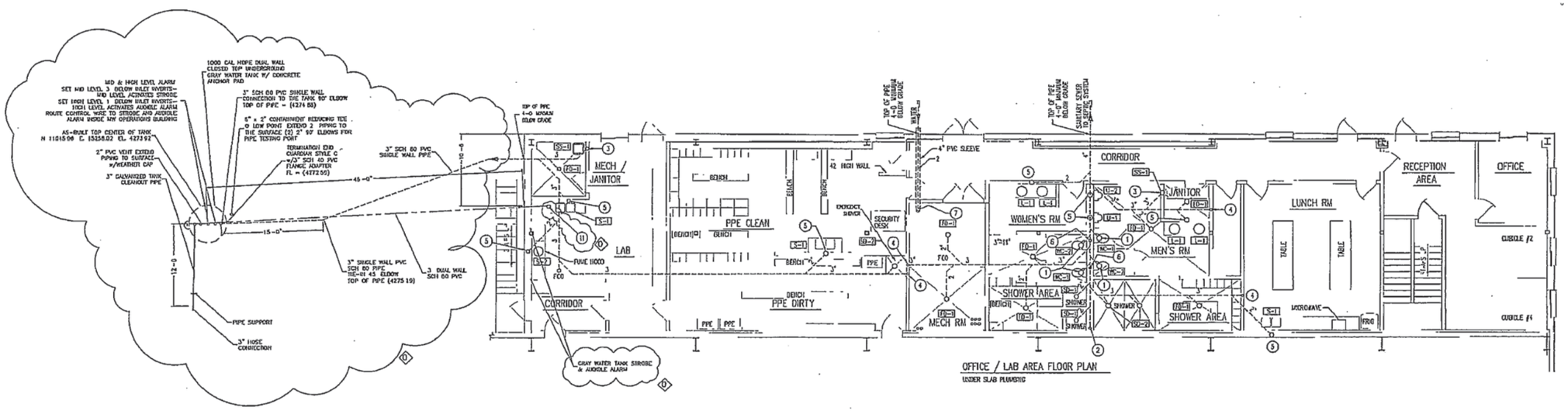

OFFICE / LAB AREA FLOOR PLAN

UNDER SLAB PLUMBING

PLUMBING FIXTURE SCHEDULE					
SYMBOL	FIXTURE	W	V	HW	CW
WC-1	WATER CLOSET	4"	2	–	1"
WC-2	WATER CLOSET (ACCESSIBLE)	4	2	–	1
U-1	URINAL	2	2	–	0.75"
U-2	URINAL (ACCESSIBLE)	2	2	–	0.75"
S-1	SINK DOUBLE	2	1.5	0.5"	0.5"
S-2	SINK LABORATORY HOOD	1.5	1.5	0.5"	0.5"
SS-1	SERVICE SINK	3"	2"	0.75	0.75"
L-1	LAVATORY	1.5"	1.5"	0.5"	0.5
ES-1	EMERGENCY SHOWER	2.5"	–	1.25	–
WH-1	WATER HEATER	–	–	1.5"	1.5"
SH-1	SHOWER HEAD w/ MIXING VALVE	–	–	0.75"	0.75"
TW-1	TEMPERD WATER SYSTEM	–	–	1"	1
SD-1	SHOWER DRAIN	2	2	–	–
SD-2	SHOWER DRAIN	3	2	–	–
FD-1	FLOOR DRAIN	2	2	–	–

KEYED NOTES

1. 4" WASTE STUB-UP W/WATER CLOSET FLANGE LOCATE CENTER 16" FROM CENTER OF PARTITION
2. 4 VENT STUB-UP
3. 3 WASTE STUB-UP
4. 3" VENT STUB-UP
5. 2" WASTE STUB-UP-DISCONNECTED & CAPPED
6. 2" VENT STUB-UP
7. 2" WATER SUPPLY STUB-UP
8. 2" VENT THROUGH ROOF
9. 3 VENT THROUGH ROOF
10. 4 VENT THROUGH ROOF
11. 3" DUAL WALL STUB-UP THROUGH FLOOR AND CONNECTED TO S-1

LEGEND

- WASTE
- WATER – COLD
- WATER – HOT
- VENT
- PROPANE GAS

NOTES

A. ALL PLUMBING MATERIAL AND INSTALLATION ARE IN COMPLETE ACCORDANCE WITH THE UNIFORM PLUMBING CODE (1991) AND ALL STATE AND LOCAL REQUIREMENTS OF TOOELE COUNTY UTAH

B. VENTS FROM LABORATORY WASTE SYSTEM AND SANITARY WASTE SYSTEMS ARE NOT COMBINED

C. VENTS THROUGH ROOF EXTEND THROUGH SECOND FLOOR OFFICE SPACE.

D. CENTRY CONSTRUCTORS & ENGINEERS DRAWING 6089P01C & 6089P02B WAS USED FOR REFERENCE PURPOSES .

0 8 16 24

1/0"=1'-0"

LICENSED PROFESSIONAL ENGINEER NO 189500 DAVID F. BOOTH 2/8/05 STATE OF UTAH

	DATE	INIT	DESCRIPTION OF CHANGE
1	02/08/05	DFB	ADDED GRAY WATER TANK
0	10/29/02	KL	RCRA PERMIT RENEWAL

ENVIROCARE OF UTAH, INC.
THE SAFE ALTERNATIVE

DRAWN BY K LUTZ	MIXED WASTE OPERATIONS BUILDING	SCALE AS NOTED
CHECKED BY K HAWKINS	OFFICE / LAB AREA	DATE 10/28/02
APPROVED BY D BOOTH	PLUMBING PLAN	DRAWING NO. 0254-P01
	CLIVE, UTAH	REV 0

NORTH

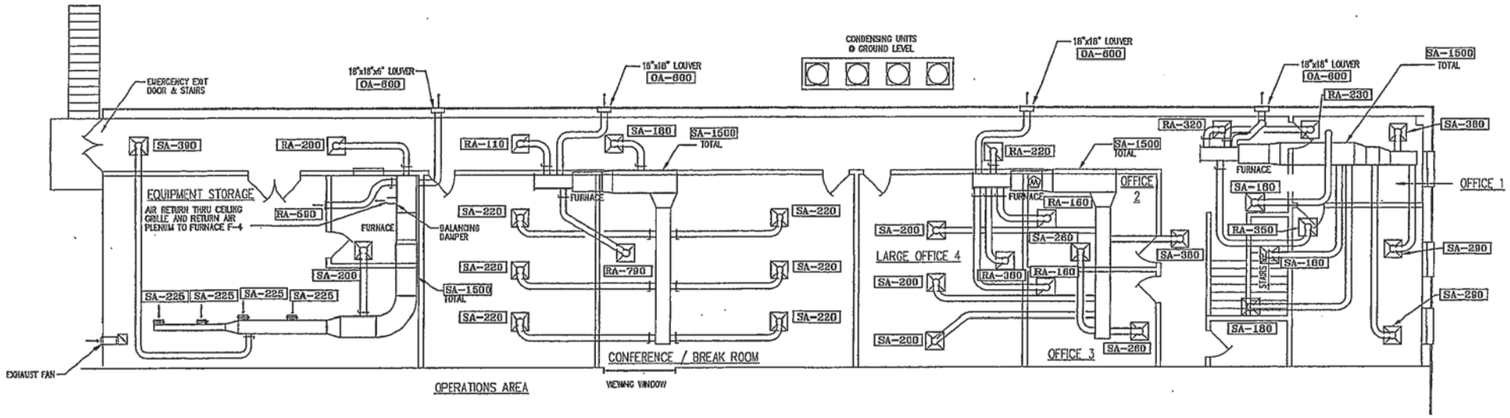

SECOND FLOOR PLAN

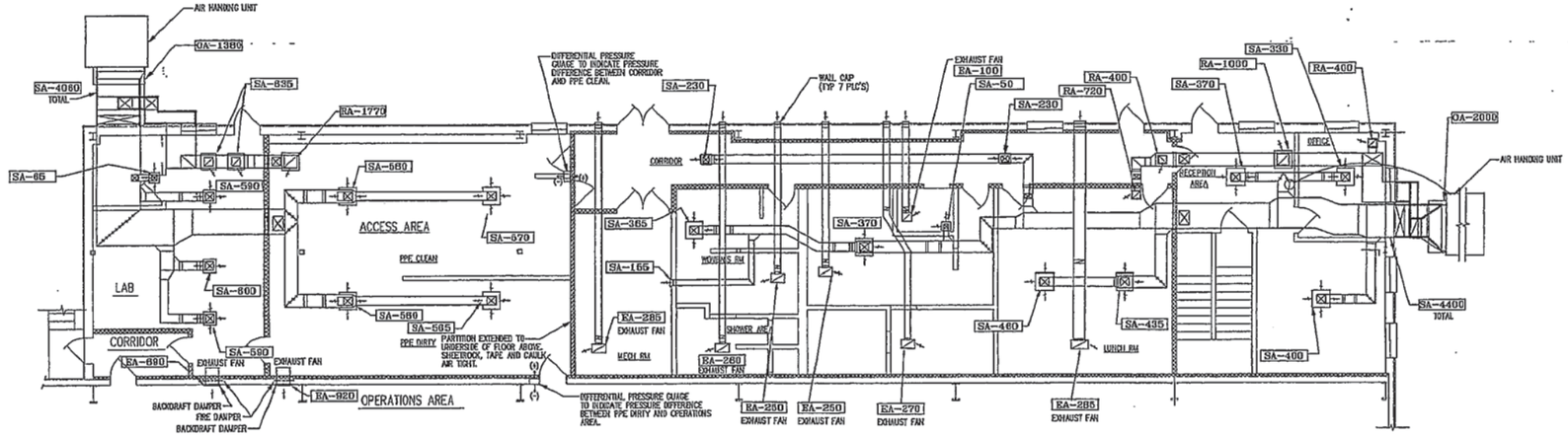

OFFICE / LAB AREA FLOOR PLAN

LEGEND

SA-CFM	SUPPLY AIR
RA-CFM	RETURN AIR
OA-CFM	OUTSIDE AIR
EA-CFM	EXHAUST AIR
(T)	THERMOSTAT

NOTE:

1. THE OFFICE/LAB AREA IS MAINTAINED AT A POSITIVE PRESSURE IN COMPARISON TO THE OPERATIONS AND ACCESS AREAS.
2. CFM FLOWS SHOWN ARE APPROXIMATE.
3. CENTRY CONSTRUCTORS & ENGINEERS DRAWINGS D-98160-M-002M & -M-004M WAS USED FOR REFERENCE PURPOSES

0 8 16 24
1/8"=1'-0"

LICENSED PROFESSIONAL ENGINEER No. 154610-2202 DAVID P. BOOTH 10/29/02 STATE OF UTAH

CENTRY CONSTRUCTORS & ENGINEERS DRAWINGS D-98160-M-002M & -M-004M WAS USED FOR REFERENCE PURPOSES

DATE	INIT.	DESCRIPTION OF CHANGE
10/29/02	KL	RCRA PERMIT RENEWAL

ENVIROCARE OF UTAH, INC. THE SAFE ALTERNATIVE

DRAWN BY	K. LUTZ
CHECKED BY	D. BOOTH
APPROVED BY	D. SHOCKEY

MIXED WASTE OPERATIONS BUILDING
OFFICE LAYOUTS
HVAC PLAN
CLIVE, UTAH

SCALE: AS NOTED
DATE: 10/28/02
DRAWING NO.: 0254-M02
REV.: 4

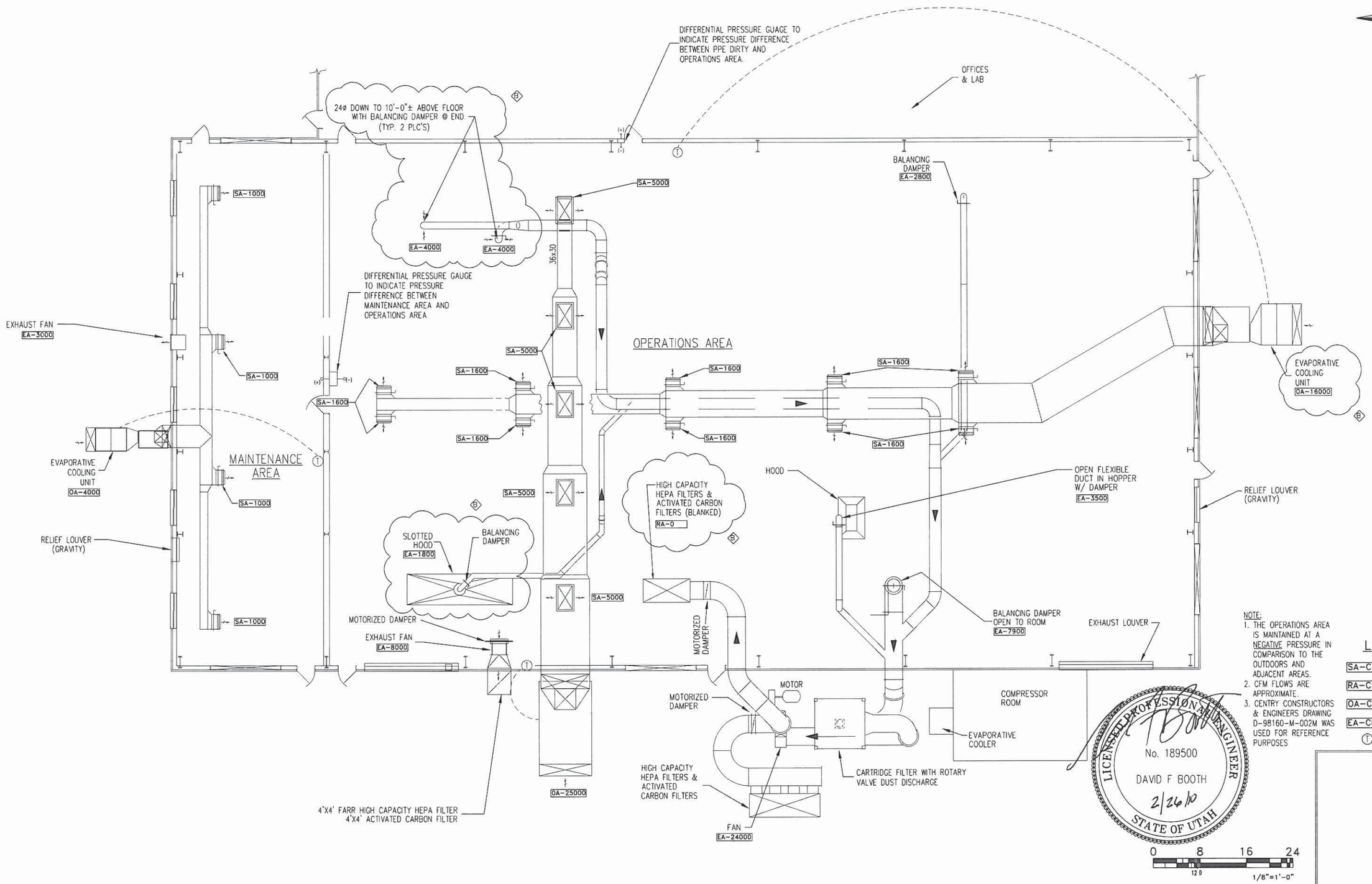

NOTE:
1. THE OPERATIONS AREA IS MAINTAINED AT A NEGATIVE PRESSURE IN COMPARISON TO THE OUTDOORS AND ADJACENT AREAS.
2. CFM FLOWS ARE APPROXIMATE.
3. CENTRY CONSTRUCTORS & ENGINEERS DRAWING D-98160-M-002M WAS USED FOR REFERENCE PURPOSES

LICENSED PROFESSIONAL ENGINEER
No. 189500
DAVID F BOOTH
2/26/10
STATE OF UTAH

LEGEND

SA-CFM	SUPPLY AIR
RA-CFM	RETURN AIR
OA-CFM	OUTSIDE AIR
EA-CFM	EXHAUST AIR
(T)	THERMOSTAT

2/26/10	DFB	UPDATED VENTILATION SYSTEM
10/29/02	KL	RCRA PERMIT RENEWAL
DATE	INIT.	DESCRIPTION OF CHANGE

ENERGYSOLUTIONS

DRAWN BY S. BRYAN	MIXED WASTE OPERATIONS BUILDING	SCALE AS NOTED	DATE 10/25/02
CHECKED BY D. BOOTH	OPERATIONS AREA	DRAWING NO. 0254-M01	REV
APPROVED BY D. SHOCKEY	HVAC PLAN		
	CLIVE, UTAH		

NOTES

1. SEE 0254-A02 FOR OFFICE & LAB PLAN, 0254-A01 FOR MAIN BLDG PLAN.
2. FOR FIREPROOFING SEE ARCHITECTURAL SPECIFICATIONS

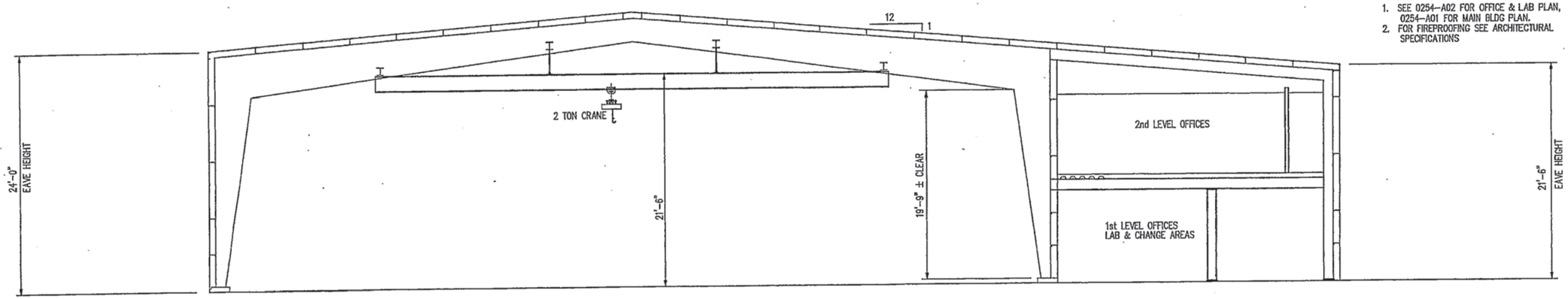

SECTION A
SCALE: 3/16"=1'-0" A-001

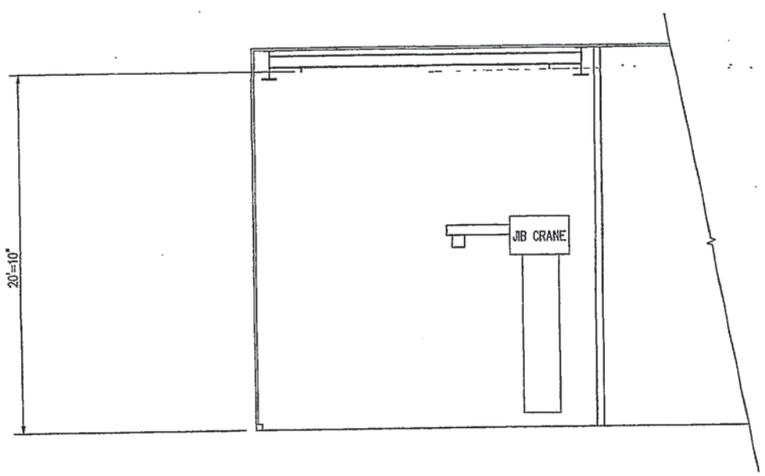

SECTION B
SCALE: 3/16"=1'-0" A-001

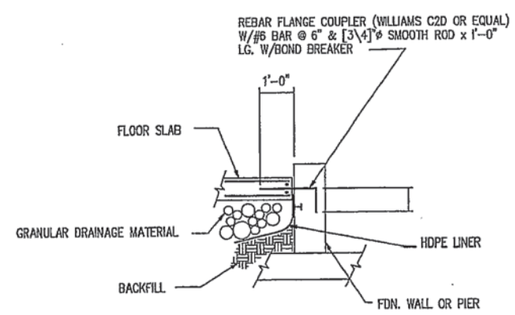

SECTION C
SCALE: 3/8"=1'-0" A-001

NOTE:
1. CENTRY CONSTRUCTORS & ENGINEERS DRAWING 6069S03C WAS USED FOR REFERENCE PURPOSES

LICENSED PROFESSIONAL ENGINEER No. 5088 DAVID SHOCKEY STATE OF UTAH 11/04/02

DRAWINGS ARE REPRESENTATIVE OF CERTIFIED AS-BUILT AND PERMITTING DRAWINGS ON FILE WITH THE STATE.

DATE	INIT.	DESCRIPTION OF CHANGE
10/29/02	KL	RCRA PERMIT RENEWAL

ENVIROCARE OF UTAH, INC. THE SAFE ALTERNATIVE

DRAWN BY K. LUTZ
CHECKED BY D. BOOTH
APPROVED BY D. SHOCKEY

MIXED WASTE OPERATIONS BUILDING
BUILDING SECTIONS
–
CLIVE, UTAH

SCALE: AS NOTED
DATE: 10/28/02.
DRAWING NO. 0254-A03
REV. 2

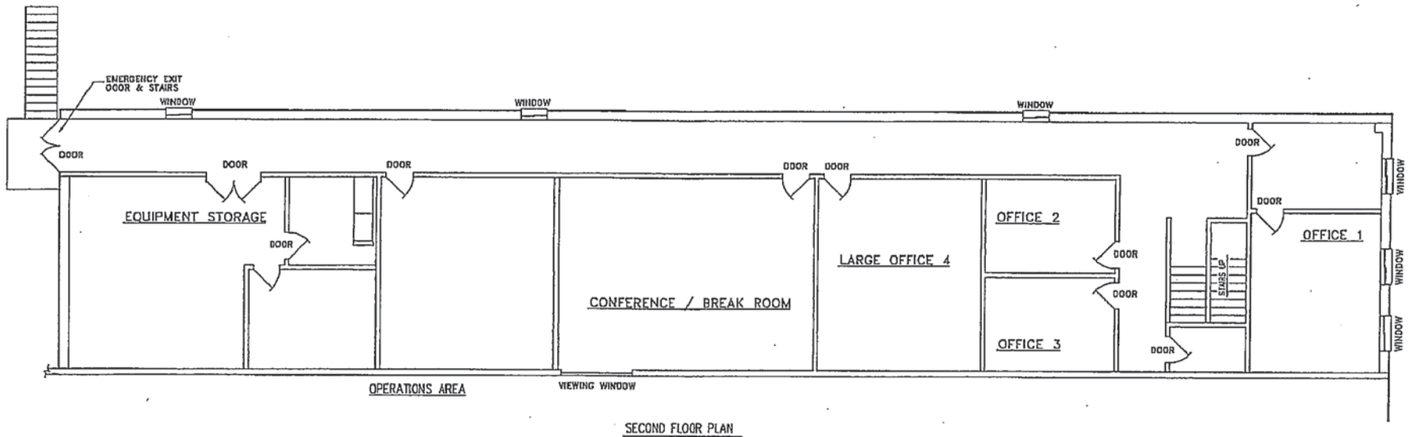

SECOND FLOOR PLAN

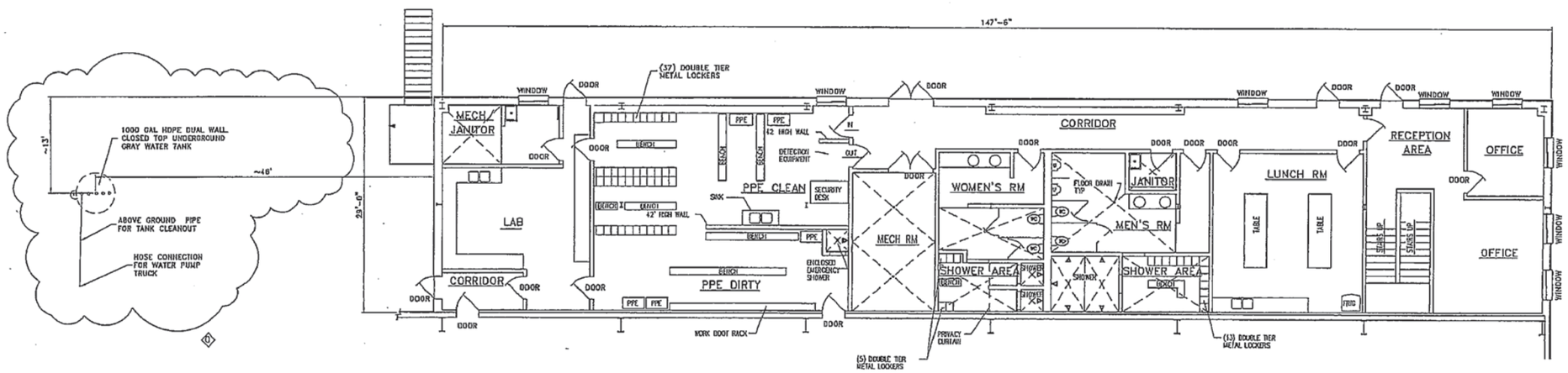

OFFICE / LAB AREA FLOOR PLAN

0 1/8" TL EL 100-0

NOTE
1 CENTRY CONSTRUCTORS & ENGINEERS DRAWINGS 6089S01C & 6089S03C WAS USED FOR REFERENCE PURPOSES

0 8 16 24
120 1/8"=1'-0"

LICENSED PROFESSIONAL ENGINEER
No. 189500
DAVID F. BOOTH
2/8/05
STATE OF UTAH

DATE	INIT	DESCRIPTION OF CHANGE
02/08/05	DFB	ADDED GRAY WATER TANK
10/29/02	KL	RCRA PERMIT RENEWAL

ENVIROCARE OF UTAH, INC
THE SAFE ALTERNATIVE

DRAWN BY: S BRYAN
DESIGNED BY: K HAWKINS
REVIEWED BY: D BOOTH

MIXED WASTE OPERATIONS BUILDING
OFFICE / LAB AREA / CHANGE AREA
FLOOR PLANS
CLIVE, UTAH

SCALE: AS NOTED
DATE: 10/23/02
DRAWING NO: 0254-A02
REV: 0

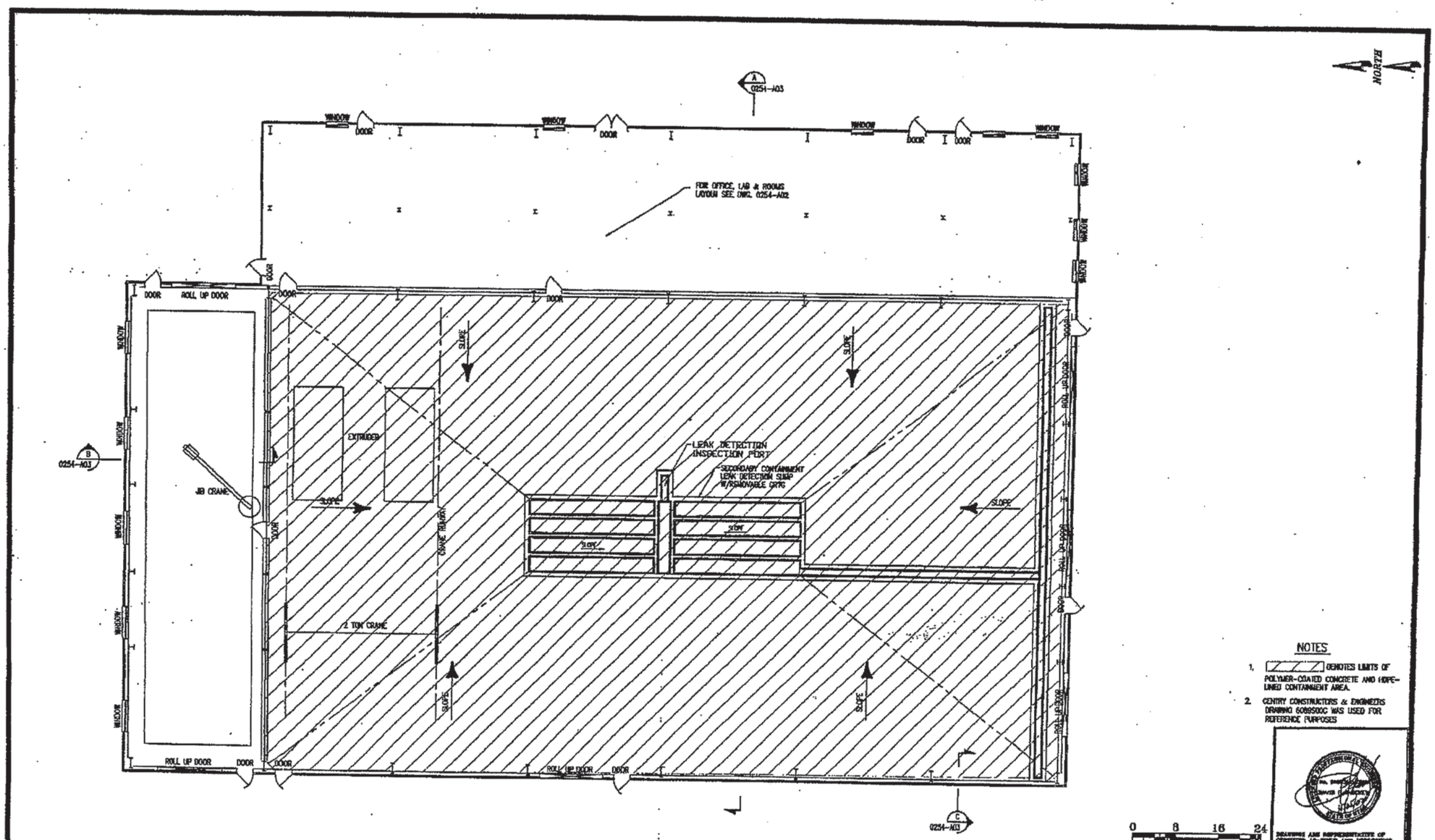

NOTES

1. DENOTES LIMITS OF POLYMER-COATED CONCRETE AND HDPE-LINED CONTAINMENT AREA.
2. CENTRY CONSTRUCTORS & ENGINEERS DRAWING 6089500C WAS USED FOR REFERENCE PURPOSES

DRAWINGS ARE REPRESENTATIVE OF CONSTRUCTION AS-BUILT AND PERMITTING DRAWINGS ON FILE WITH THE STATE.

REV	DATE	INIT	DESCRIPTION OF CHANGE
	10/29/02	SB	RCRA PERMIT RENEWAL

ENVIROCARE OF UTAH, INC. THE SAFE ALTERNATIVE

K. LUTZ	MIXED WASTE OPERATIONS BUILDING	AS NOTED	10/28/02
D. BOOTH	FLOOR PLAN AND LAYOUT		
D. SHOCKEY	CLIVE, UTAH	0254-A01	0