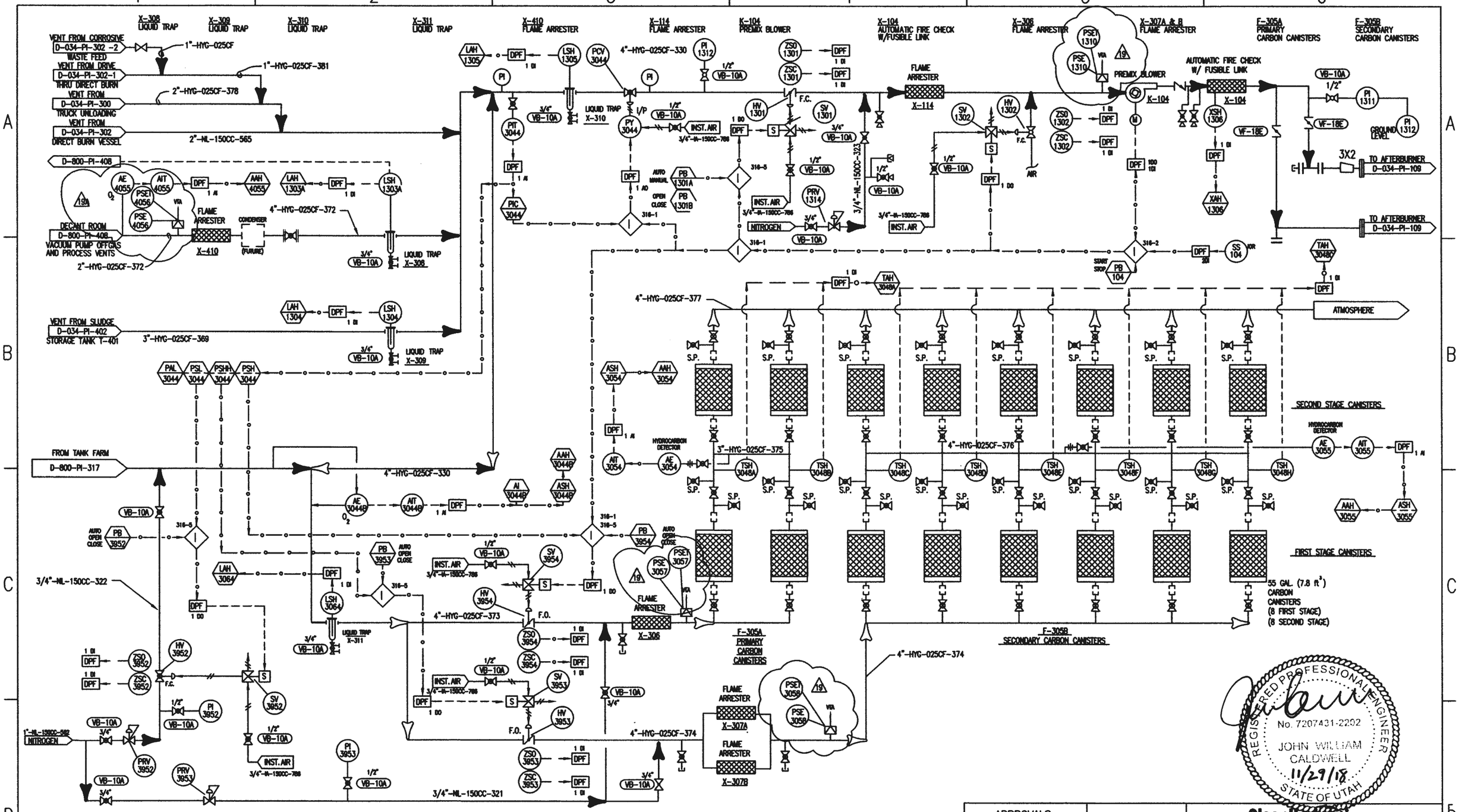

INTERLOCK DESCRIPTION

316-1 SWITCHES FLOW TO CARBON CANISTER ON AFTERBURNER LOW TEMPERATURE, LOW O , OR PREMIX BLOWER SHUTDOWN

316-2 PREMIX BLOWER START / STOP AND REMOTE JOG

316-5 VALVE CONTROL OVERRIDE FROM WDPF.

REVISIONS

NO	DESCRIPTION	DATE	BY	CHK		ENG MGR
1	HARD WIRED TO LEVEL	04-25-00	GVC			
2	ADDED VENT FROM DIRECT BURN TANKER	6-5-00	GVC			
3	ADDED TRUCK UNLOADING DIRECT BURN STA.	03-19-02	KL			
4	ADDED CORROSIVE WASTE VENT	12-5-07	KL			
5	CHANGED AIT3044 TO AIT3044B (NEW INSTRUMENT)	01-28-14	LCC			

REVISIONS

NO	DESCRIPTION	DATE	BY	CHK		ENG MGR
6	CORRECTED DRAWING REFERENCE	11-10-15	MM	LB		
7	2016 KILN PHA	11-28-16	MM	TL		
8	CORRECTED DRAWING	01-26-17	MM	TL		
9	ADDED PSET 1310, PSET 3057, PSET 3058	11-01-18	JWR			JWR
9A	ADDED PSET 4056	11-19-18	JWR	TL		JWR

APPROVALS

	BY	DATE
DRAWN	GW	04-22-99
CHECKED		
ELEC		
MECH		
STRUCT		
PROJECT ENG		
ENGINEERING MGR		
AS BUILT		

REGISTERED PROFESSIONAL ENGINEER
DATE:

CleanHarbors

TOOLE TITLE

UTAH ENVIRONMENTAL SERVICE CENTER
INCINERATION PLANT FOR INDUSTRIAL WASTES
P&ID HYDROCARBON VENT SYSTEM

FOR TOOELE SITE | CAD NO. AP341
SCALE | JOB NO PI-316 | CLEANHARBORS DWG NO D-800-PI-316 | REV 19A