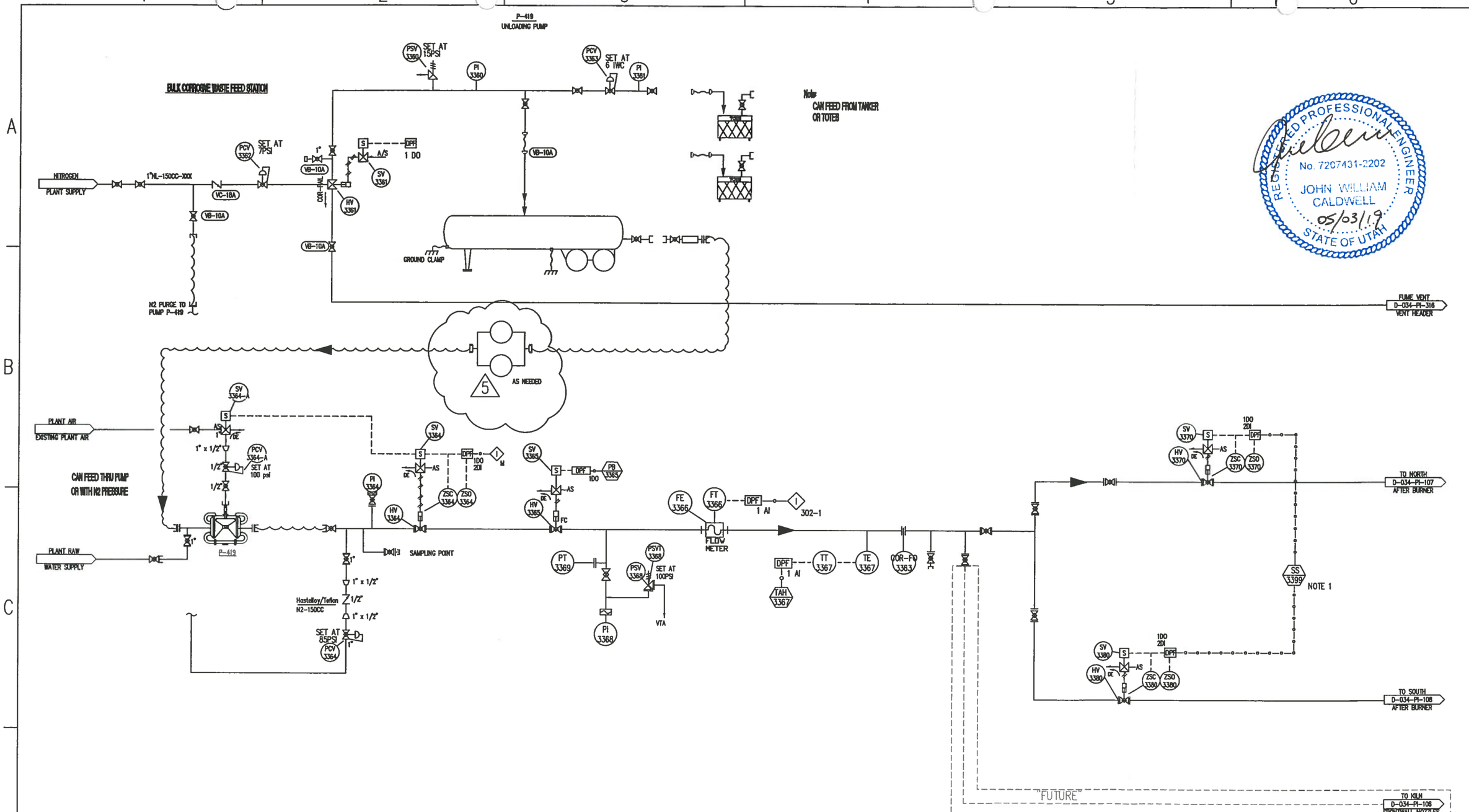

NOTE 1 : ONLY ONE VALVE OPEN AT A TIME

INTERLOCK DESCRIPTION

M – MASTER INTERLOCK SYSTEM
302-1 FLOW LIMIT IS DETERMINED BY THE PORT BEING USED

REVISIONS

NO	DESCRIPTION	DATE	BY	CHK		ENG MGR
4	CORRECTED DRAWING, ADDED PSVT 3368	11-01-18	JWR	TL		JWR
1	ADDED TOTES	6-01-10	LCC			
2	ADDED AIR CONTROL TO PUMP, N2 REGULATOR					
	TO TOTES, ISOLATION TO PURGE, AND WAND UPDATE	08-24-16	MM	JE		
3	2016 KILN PHA, CORRECTIONS	11-23-16	MM	TL		

REVISIONS

NO	DESCRIPTION	DATE	BY	CHK		ENG MGR
5	ADDITION OF DUPLEX STRAINER	05-01-19	JWR	CP		JWR

APPROVALS

	BY	DATE
DRAWN	KL	10-25-07
CHECKED		
ELEC		
MECH		
STRUCT		
PROJECT ENG		
ENGINEERING MGR		
AS BUILT		

REGISTERED PROFESSIONAL ENGINEER
DATE:

CleanHarbors
ARAGONITE LLC

THIS DRAWING IS THE PROPERTY OF CLEAN HARBORS ARAGONITE LLC ANY INFORMATION CONTAINED HEREON MAY NOT BE COPIED OR USED WITHOUT WRITTEN PERMISSION OF OWNER.

TITLE
UTAH ENVIRONMENTAL SERVICE CENTER
INCINERATION PLANT FOR INDUSTRIAL WASTES
P&ID DIRECT BURN WASTE LIQUID UNLOADING

FOR	TOOELE SITE	CAD NO.	KLB041
SCALE	JOB NO	SAFETY-KLEEN DWG NO	D-034-PI-302 -2
		REV	5